6.4.2. Financial Justification

A. Financial Evaluation

On the condition that the lending terms for investment capital will be 5% annual rate of interest and the repayment period of 30 years with the grace period of 10 years for foreign exchange component, and 11% annual rate of interest and the repayment period of 25 years with the grace period of 5 years for local currency component, and that the average rate of water will be Rs. 9.0 per thousand gallons whereunder monthly water expense of a household will constitute 2% of its monthly income, the value of FIRR (= financial internal rate of return) has been computed at 6.6%.

If a project is to be feasible, the FIRR value is supposed to be over 8% at the least, and preferably over 12%. This is a general guideline adopted by World Bank and other financial institutions. Specifically, in the present Pakistan the annual rate of the opportunity cost of capital is estimated at around 14%.

The proposed lending terms on foreign loans are one of the standard cases for a project in the public sector. The terms on local loans are somewhat soft in that the annual rate of interest is by three points lower than the prevailing rate. They are supposed to be borne by the central government.

The water rate of Rs. 9.0 per thousand gallons is theoretically appropriate and reasonable since it means that a household will pay water charges corresponding to 2% of its income. But, it cannot be denied that the proposed rate is very high compared with the existing water tariffs and charges. If the rate is difficult to be implemented, and the willingness to pay of Rs. 6.49 is adopted in its stead, the difference of Rs. 2.51 must be covered by subsidies.

The FIRR value of 6.6% is by far low compared with the bank rate or the rate of the opportunity cost of capital in Pakistan. However, water supply is a public service and meant for the welfare of the people. In this regard the water supply organization should not make profit. But as a financial entity it must be prepared for unexpected disbursements. Also, financial losses in the first half of the project life must be lessened to the extent possible. For these reasons the value of FIRR should be somewhere between zero and around 14%. Actually, it is midway from both extremes.

B. Sensitivity Analysis

Sensitivity analysis from financial standpoint has been made by changing the conditions upon which the value of FIRR is computed.

In the first place, the annual rate of interest on local currency component is presupposed to be full 14%. As regard other factors in the lending terms and the average water rate, they are unchanged.

As a result of the analysis it has been discovered that under the lending terms of 14% annual rate of interest and the repayment period of 25 years with the grace period of 5 years for local component, and 5% annual rate of interest and the repayment period of 30 years with the grace period of 10 years for FEC, and the average water rate of Rs. 9.0 per thousand gallons, the value of FIRR is calculated at 4.1%.

This value itself is not to be argued about. The problem is the cashflow. As shown in the third page of Table C.IV-13 negative incremental benefits exceeding Rs. 200 million appear consecutively for 13 years. It cannot but put financial strains on the water supply organization.

The objective of the second analysis is to find out the water rate that will produce the FIRR value of 6% to 7% under the same lending terms as in the first case. The result is that water rate of Rs. 10.5 per thousand gallons produces the FIRR of 6.5%. In other words, if the terms on local component is not attenuated, the beneficiaries will have to pay Rs. 1.5 more to make up for it.

In the third case, under the given water rate of Rs. 8.0, the interest rates on both components that will produce the FIRR of 6% to 7% have been sought. It has been found that under the water rate of Rs. 8.0 per thousand gallons, and the lending terms of 4% annual rate of interest and the payback period of 30 years with the grace period of 10 years for foreign exchange component, and 9% annual rate of interest and the payback period of 25 years with the grace period of 5 years for local currency component, the value of FIRR is calculated at 6.8%. That is to say, if the water rate is cut by Rs. 1, interest rate on foreign exchange and local currency portions shall be cut by 1% and 2% respectively to retain the value of FIRR.

Lastly, it is clarified that if the water rate is further cut down to Rs. 6.5, interest rates on FC and LC must be lowered to 1% and 7% respectively to have the FIRR value of 6.6%.

CHAPTER VII. CONCLUSIONS AND RECOMMENDATION

CHAPTER VII. CONCLUSION AND RECOMMENDATION

7.1. Conclusion

The recommended alternative, in which the water conduction facilities consist of intake tower, pressure and free flow tunnel, water treatment plant, pumping station, service reservoir and pipeline, is technically feasible. In the alternative, about 78% of the total amount of the water to be distributed to Rawalpindi area would be served by gravity.

The operation and maintenance of the facilities will also be technically facile and economically unburdensome compared with other alternatives.

The EIRR level of 6.2% is a standard one for a project in the water supply sector, and as such the Project is primarily judged feasible. One point that is critically important is the magnitude and dimension of intangible benefits to be expected from the Project.

If one considers millions of people in the beneficiary areas to be saved from the sorrows of diseases and deaths as well as from the drudgery of unending daily water fetching in the generations to come, which is not properly represented in the EIRR value, and also far-reaching socio-economic effects such as the creation of healthier and more productive people and the development of commerce and industries culminating in accelerated growth and expansion of the economy in and around the project areas, which can be beyond the realm of EIRR, one cannot but conclude that the Project is definitely feasible.

The proposed water rate of Rs. 9.0 per thousand gallons is theoretically at the least within the paying ability of consumers. The proposed lending rates on investment capital are 5% for foreign

exchange component and 11% for local currency component. The latter is by 3% lower than the prevailing rate. Aspects of cashflow are not marked because the water supply service is essentially for the welfare of the people and thus based on a no profit, no loss principle. The FIRR value of 6.6% is reserved basically to alleviate financial losses in the first half of project life.

7.2. Recommendations

A. Survey and Investigation

The following topographic survey/mapping and geological survey shall be undertaken prior to and or during detailed design stage by the project execution agencies of Pakistan and consultants. The survey items and quantities are discussed in Appendix C and the summary is described as under.

- The mapping with scale 1:5,000 shall be made for 13 km along the proposed tunnel route.
- Topographical survey and mapping for major facilities shall be made with scale 1:500 to 1:1000.
- Seismic survey, drilling, permeability test, geological and hydro-geological reconnaissance and rock test shall be executed to clarify conditions of rock mass and groundwater along the proposed tunnel route.
- Geological survey such as drilling, standard penetration test and physcal soil test for major facilities shall be executed during detailed design stage.

B. An effective countermeasure to the shortage of water in the Khanpur Dam during a drought period of once in five years frequency must be given a foremost priority for future examination.

C. To realize a sound management of water supply service thus leading the Project to a successful undertaking, the development and reinforcement of distribution networks and meter systems shall be pushed to the extent possible, and also the establishment of water tariff systems and the elevation of cost recovery rate shall be attained.

D. The gap of a few percent between the prevailing bank rates and the proposed lending rates on investment capital shall be filled by the subsidies from the central government.

DRAWINGS

LIST OF DRAWINGS

DWG.NO	TITLE
33	GOLRA-2 Service Reservoir General Plan
34	GOLRA-2 Service Reservoir Plan
35	GOLRA-2 Service Reservoir Typical Section
36	GOLRA-2 Service Reservoir Pipe Section
37	H-11 Service Reservoir General Plan
38	H-11 Service Reservoir Plan and Section
39	Distribution Main for Islamabad High Zone Plan and Profile
40	Distribution Main for Islamabad Low Zone Plan and Profile
41	Distribution Main for Rawalpindi Plan and Profile (1)
42	" (2)
43	" (3)

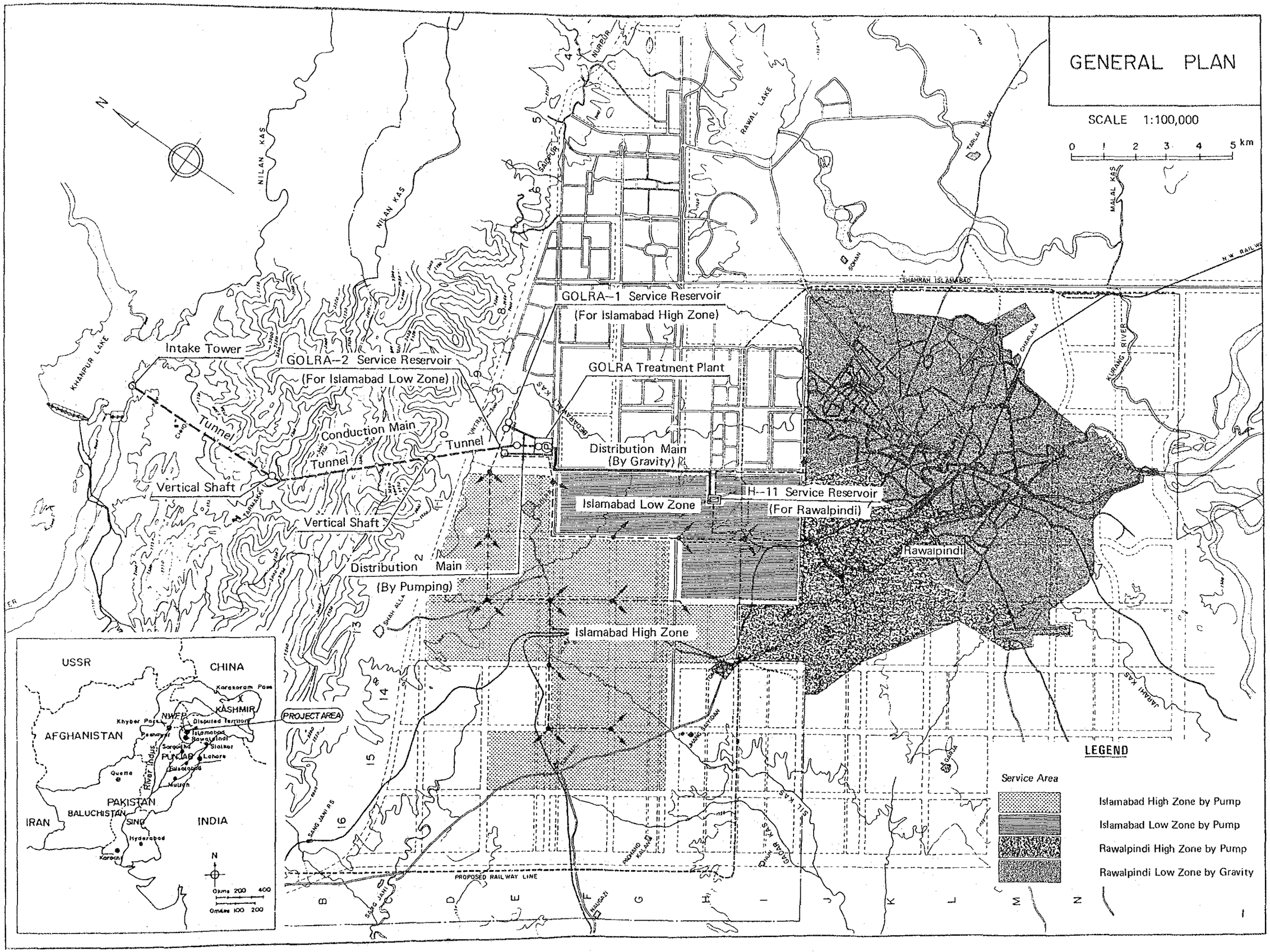
GENERAL PLAN
SCALE 1:100,000
0 1 2 3 4 5 km
N
NILAN KAS
RAWAL LAKE
MALAL KAS
KHANPUR LAKE
SHAHRAH ISLAMABAD
GOLRA--1 Service Reservoir
(For Islamabad High Zone)
Intake Tower
GOLRA--2 Service Reservoir
(For Islamabad Low Zone)
GOLRA Treatment Plant
Tunnel
Conduction Main
Tunnel
Tunnel
Distribution Main
(By Gravity)
Vertical Shaft
Vertical Shaft
H--11 Service Reservoir
(For Rawalpindi)
Islamabad Low Zone
Rawalpindi
Distribution Main
(By Pumping)
Islamabad High Zone
KURANG RIVER
CHARALA
PROPOSED RAILWAY LINE
USSR
CHINA
AFGHANISTAN
KASHMIR
PAKISTAN
BALUCHISTAN
IRAN
INDIA
PROJECT AREA
LEGEND
Service Area
Islamabad High Zone by Pump
Islamabad Low Zone by Pump
Rawalpindi High Zone by Pump
Rawalpindi Low Zone by Gravity

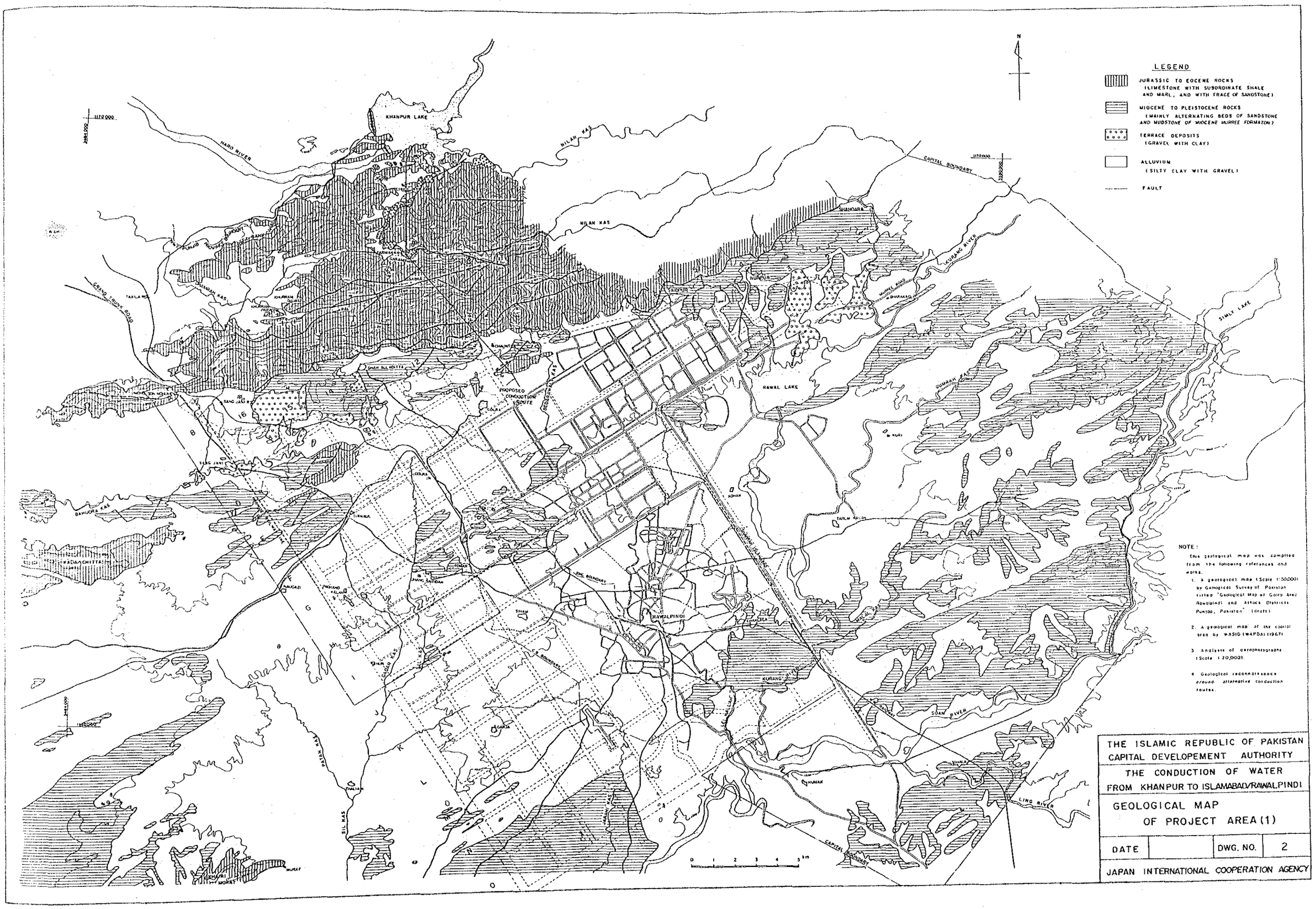
LEGEND
JURASSIC TO EOCENE ROCKS
(LIMESTONE WITH SUBORDINATE SHALE AND MARL, AND WITH TRACE OF SANDSTONE)
MIOCENE TO PLEISTOCENE ROCKS
(MAINLY ALTERNATING BEDS OF SANDSTONE AND MUDSTONE OF MIOCENE MURREE FORMATION)
TERRACE DEPOSITS
(GRAVEL WITH CLAY)
ALLUVIUM
(SILTY CLAY WITH GRAVEL)
FAULT
N
KHANPUR LAKE
HARO RIVER
HILAN KAS
CAPITAL BOUNDARY
SHAHDARA
KURANG RIVER
SIMLY LAKE
RAWAL LAKE
PROPOSED CONDUCTION ROUTE
GUMRAH KAS
BAHUORA KAS
RAWALPINDI
SOAN RIVER
LING RIVER
SIL KAS
0 1 2 3 4 5 km
NOTE :
This geological map was compiled from the following references and works.
1. A geological map (Scale 1:50,000) by Geological Survey of Pakistan titled "Geological Map of Golra Area Rawalpindi and Attock Districts Punjab, Pakistan" (draft)
2. A geological map of the capital area by WASIO (WAPDA) (1967)
3. Analyses of aerophotographs (Scale 1:20,000).
4. Geological reconnaissance around alternative conduction routes.
THE ISLAMIC REPUBLIC OF PAKISTAN
CAPITAL DEVELOPEMENT AUTHORITY
THE CONDUCTION OF WATER
FROM KHANPUR TO ISLAMABAD/RAWALPINDI
GEOLOGICAL MAP
OF PROJECT AREA (1)
DATE
DWG. NO.
2
JAPAN INTERNATIONAL COOPERATION AGENCY

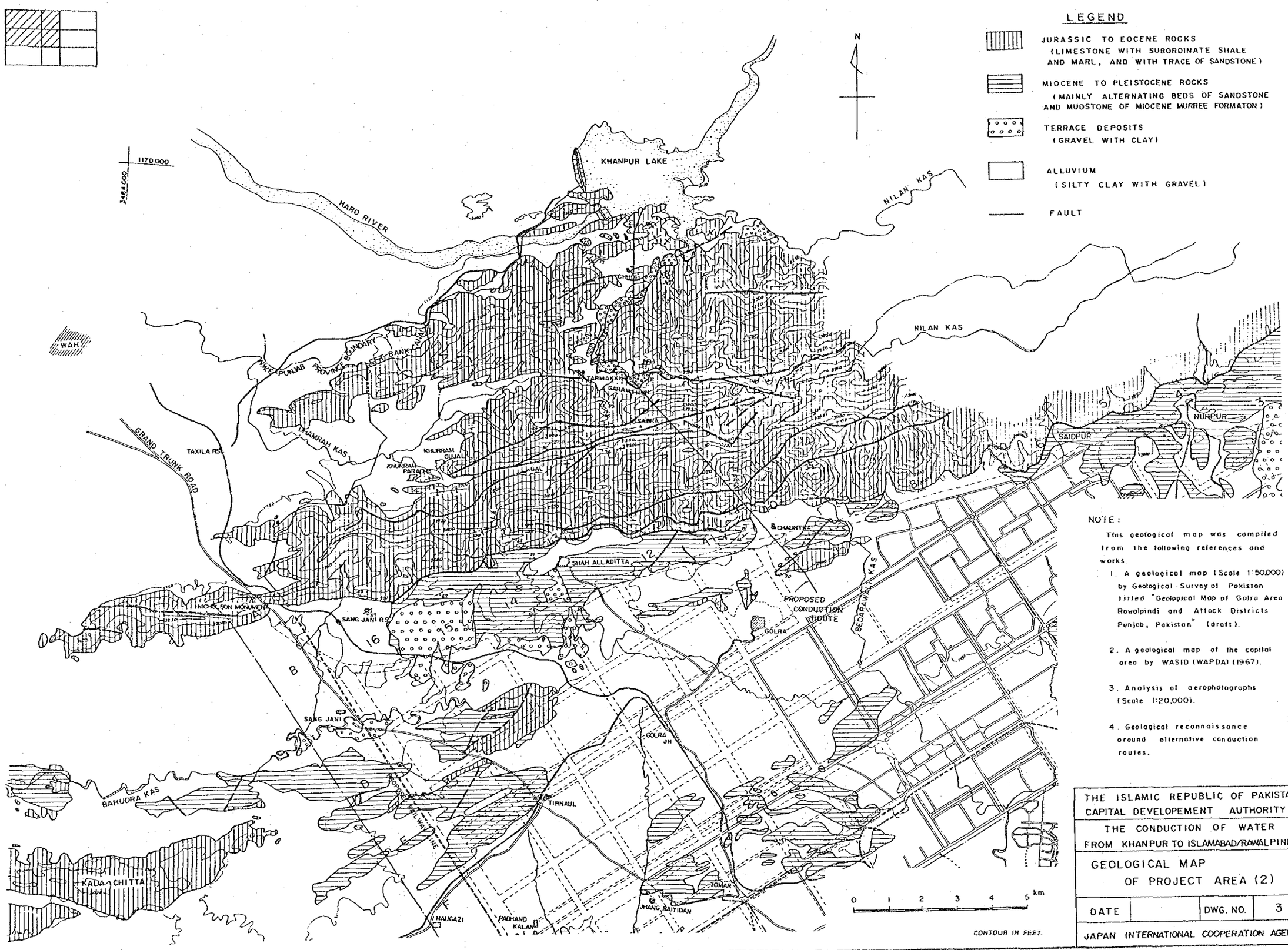

NOTE :

This geological map was compiled from the following references and works.

1. A geological map (Scale 1:50,000) by Geological Survey of Pakistan titled "Geological Map of Golra Area Rawalpindi and Attock Districts Punjab, Pakistan" (draft).
2. A geological map of the capital area by WASID (WAPDA) (1967).
3. Analysis of aerophotographs (Scale 1:20,000).
4. Geological reconnaissance around alternative conduction routes.

THE ISLAMIC REPUBLIC OF PAKISTAN CAPITAL DEVELOPEMENT AUTHORITY			
THE CONDUCTION OF WATER FROM KHANPUR TO ISLAMABAD/RAWALPINDI			
GEOLOGICAL MAP OF PROJECT AREA (2)			
DATE		DWG. NO.	3
JAPAN INTERNATIONAL COOPERATION AGENCY			

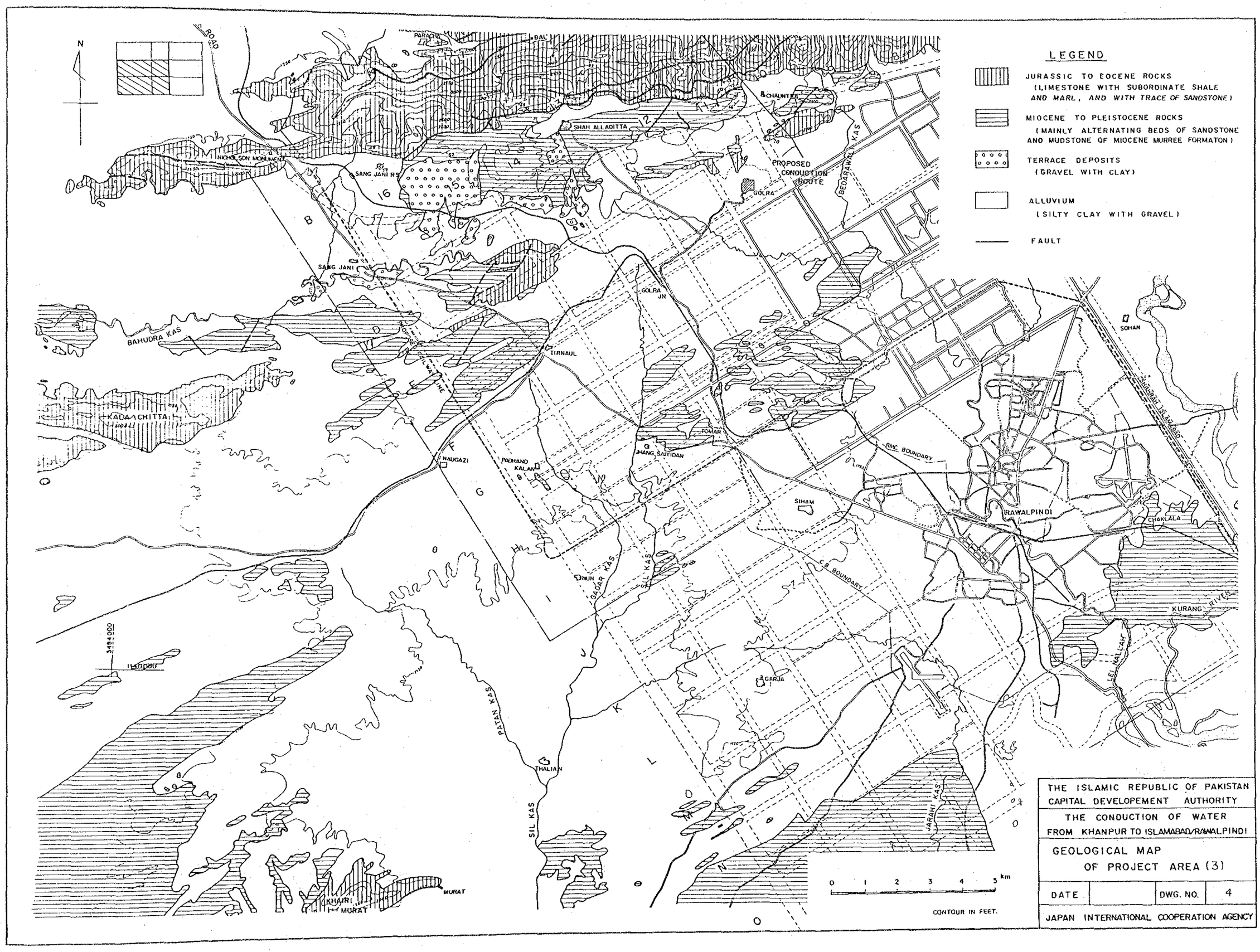
N
LEGEND
JURASSIC TO EOCENE ROCKS
(LIMESTONE WITH SUBORDINATE SHALE AND MARL, AND WITH TRACE OF SANDSTONE)
MIOCENE TO PLEISTOCENE ROCKS
(MAINLY ALTERNATING BEDS OF SANDSTONE AND MUDSTONE OF MIOCENE MURREE FORMATON)
TERRACE DEPOSITS
(GRAVEL WITH CLAY)
ALLUVIUM
(SILTY CLAY WITH GRAVEL)
FAULT
PROPOSED CONDUCTION ROUTE
NICHOLSON MONUMENT
SANG JANI
SHAH ALLADITTA
CHAUNTRA
GOLRA
GOLRA JN
BEDARAWAL KAS
BAHUDRA KAS
TIRNAUL
KALLA CHITTA
NAUGAZI
PADHANO KALAN
JHANG SAIYIDAN
TOMAR
SIHAM
RAWALPINDI
CHAKLALA
SOHAN
GRAND TRUNK ROAD
RMC BOUNDARY
C.B. BOUNDARY
KURANG RIVER
LEL NALLAH
GADAR KAS
SIL KAS
PATAN KAS
JARAHI KAS
GARJA
THALIAN
KHAIRI MURAT
MURAT
3484000
0 1 2 3 4 5 km
CONTOUR IN FEET.
THE ISLAMIC REPUBLIC OF PAKISTAN
CAPITAL DEVELOPEMENT AUTHORITY
THE CONDUCTION OF WATER
FROM KHANPUR TO ISLAMABAD/RAWALPINDI
GEOLOGICAL MAP
OF PROJECT AREA (3)
DATE
DWG. NO.
4
JAPAN INTERNATIONAL COOPERATION AGENCY

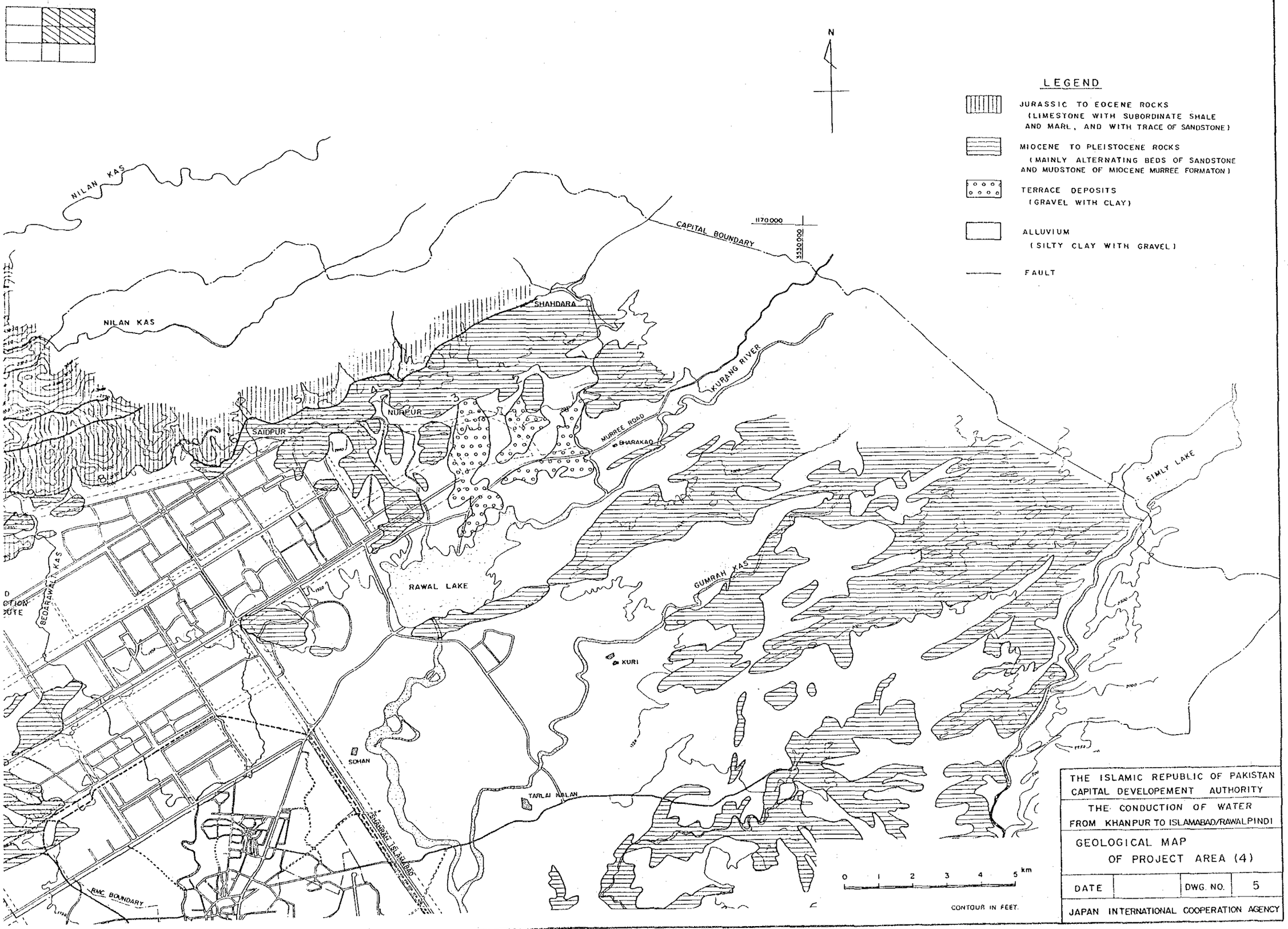
N
LEGEND
JURASSIC TO EOCENE ROCKS
(LIMESTONE WITH SUBORDINATE SHALE AND MARL, AND WITH TRACE OF SANDSTONE)
MIOCENE TO PLEISTOCENE ROCKS
(MAINLY ALTERNATING BEDS OF SANDSTONE AND MUDSTONE OF MIOCENE MURREE FORMATON)
TERRACE DEPOSITS
(GRAVEL WITH CLAY)
ALLUVIUM
(SILTY CLAY WITH GRAVEL)
FAULT
NILAN KAS
NILAN KAS
CAPITAL BOUNDARY
1170000
3530000
SHAHDARA
KURANG RIVER
NURPUR
SAIDPUR
MURREE ROAD
GHARAKAO
SIMLY LAKE
SEDRAWAL KAS
RAWAL LAKE
GUMRAH KAS
KURI
SOHAN
TARLAI KALAN
SHAHRAH ISLAMABAD
RMC BOUNDARY
0 1 2 3 4 5 km
CONTOUR IN FEET.
THE ISLAMIC REPUBLIC OF PAKISTAN
CAPITAL DEVELOPEMENT AUTHORITY
THE CONDUCTION OF WATER
FROM KHANPUR TO ISLAMABAD/RAWALPINDI
GEOLOGICAL MAP
OF PROJECT AREA (4)
DATE
DWG. NO. 5
JAPAN INTERNATIONAL COOPERATION AGENCY

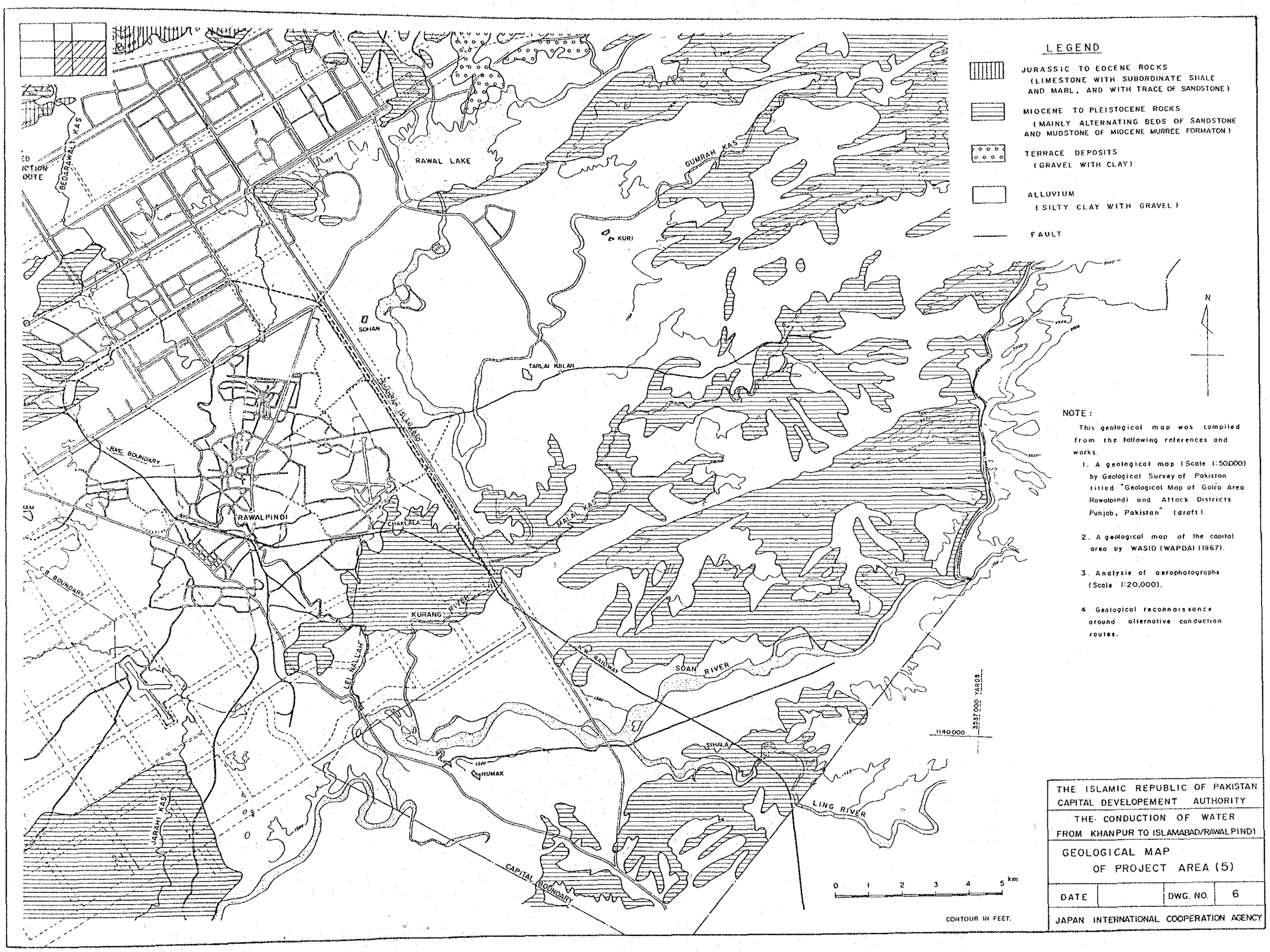
LEGEND
JURASSIC TO EOCENE ROCKS
(LIMESTONE WITH SUBORDINATE SHALE AND MARL, AND WITH TRACE OF SANDSTONE)
MIOCENE TO PLEISTOCENE ROCKS
(MAINLY ALTERNATING BEDS OF SANDSTONE AND MUDSTONE OF MIOCENE MURREE FORMATON)
TERRACE DEPOSITS
(GRAVEL WITH CLAY)
ALLUVIUM
(SILTY CLAY WITH GRAVEL)
FAULT
N
RAWAL LAKE
BEDARAWALI KAS
GUMRAH KAS
KURI
SOHAN
TARLAI KALAN
SUMRAH ISLAMAD
RWP. BOUNDARY
RAWALPINDI
CHAKLALA
KALAI KAS
KURANG RIVER
LEL NALLAH
N.W. RAILWAY
SOAN RIVER
SIHALA
HUMAK
LING RIVER
JARRAHI KAS
CAPITAL BOUNDARY
1140000
3537000 YARDS
0 1 2 3 4 5 km
CONTOUR IN FEET.
NOTE:
This geological map was compiled from the following references and works.
1. A geological map (Scale 1:50,000) by Geological Survey of Pakistan titled "Geological Map of Golra Area Rawalpindi and Attock Districts Punjab, Pakistan" (draft).
2. A geological map of the capital area by WASID (WAPDA) (1967).
3. Analysis of aerophotographs (Scale 1:20,000).
4. Geological reconnaissance around alternative conduction routes.
THE ISLAMIC REPUBLIC OF PAKISTAN
CAPITAL DEVELOPEMENT AUTHORITY
THE CONDUCTION OF WATER FROM KHANPUR TO ISLAMABAD/RAWALPINDI
GEOLOGICAL MAP OF PROJECT AREA (5)
DATE
DWG. NO. 6
JAPAN INTERNATIONAL COOPERATION AGENCY

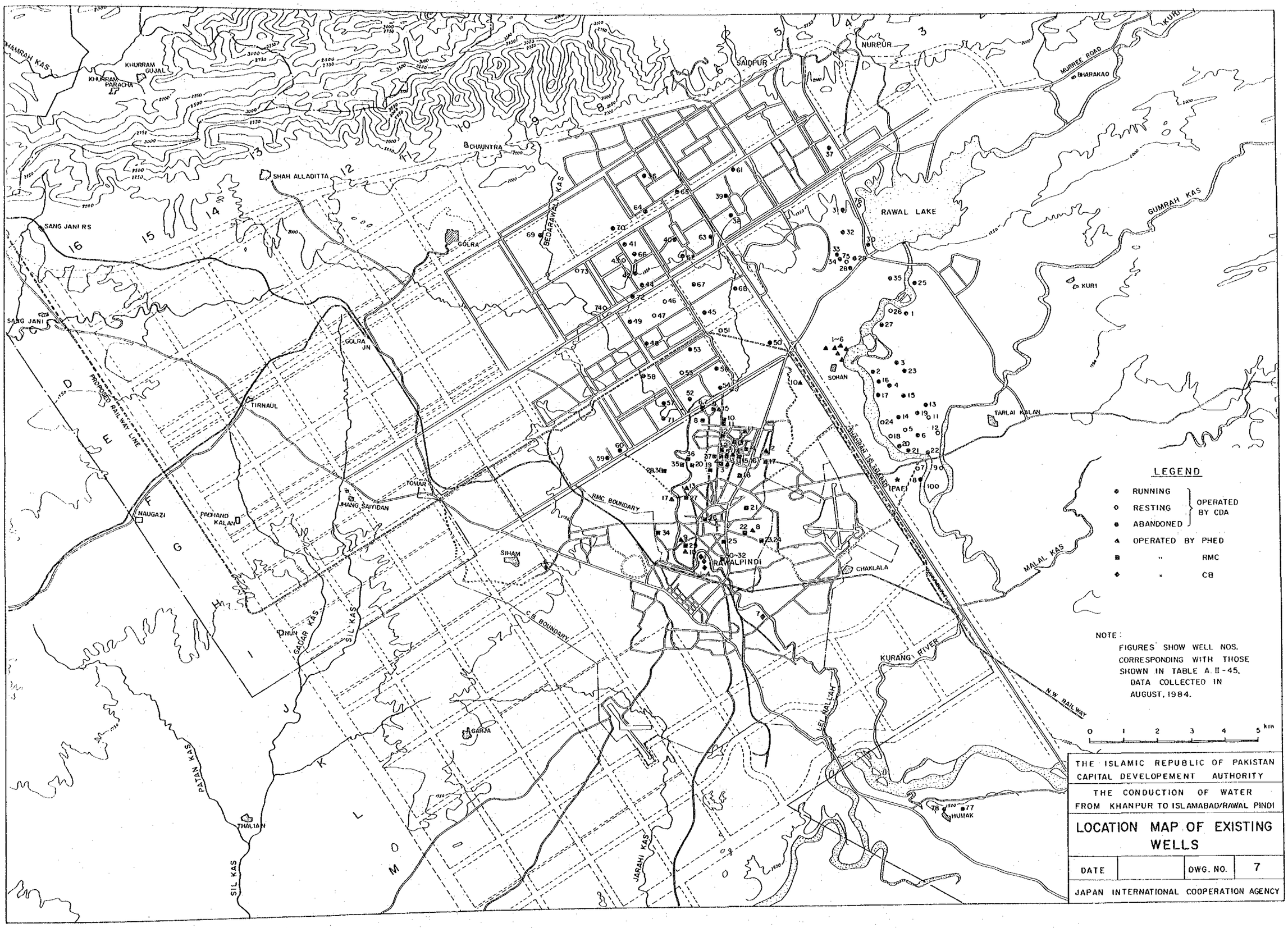
LEGEND
RUNNING
RESTING
ABANDONED
OPERATED BY CDA
OPERATED BY PHED
" RMC
" CB
NOTE:
FIGURES SHOW WELL NOS. CORRESPONDING WITH THOSE SHOWN IN TABLE A.II-45. DATA COLLECTED IN AUGUST, 1984.
0 1 2 3 4 5 km
THE ISLAMIC REPUBLIC OF PAKISTAN
CAPITAL DEVELOPEMENT AUTHORITY
THE CONDUCTION OF WATER FROM KHANPUR TO ISLAMABAD/RAWAL PINDI
LOCATION MAP OF EXISTING WELLS
DATE
DWG. NO. 7
JAPAN INTERNATIONAL COOPERATION AGENCY
RAWAL LAKE
RAWALPINDI
SAIDPUR
NURPUR
CHAUNTRA
SHAH ALLADITTA
GOLRA
GOLRA JN
TIRNAUL
TOMAR
SIHAM
CHAKLALA
SOHAN
TARLAI KALAN
KURI
HUMAK
THALIAN
NAUGAZI
PIPHAND KALAN
SANG JANI
SANG JANI RS
KHURRAM GUJAL
KHURRAM PARACHA
BHARAKAO
MURREE ROAD
GUMRAH KAS
BEDARAWAL KAS
SIL KAS
GADAR KAS
PATAN KAS
JARAHI KAS
LEL NALLAH
KURANG RIVER
MALAL KAS
N.W. RAILWAY
PROPOSED RAILWAY LINE
RMC BOUNDARY
CB BOUNDARY
SHAHRAH I SLAMABAD
PAF
D E F G H I J K L M N O

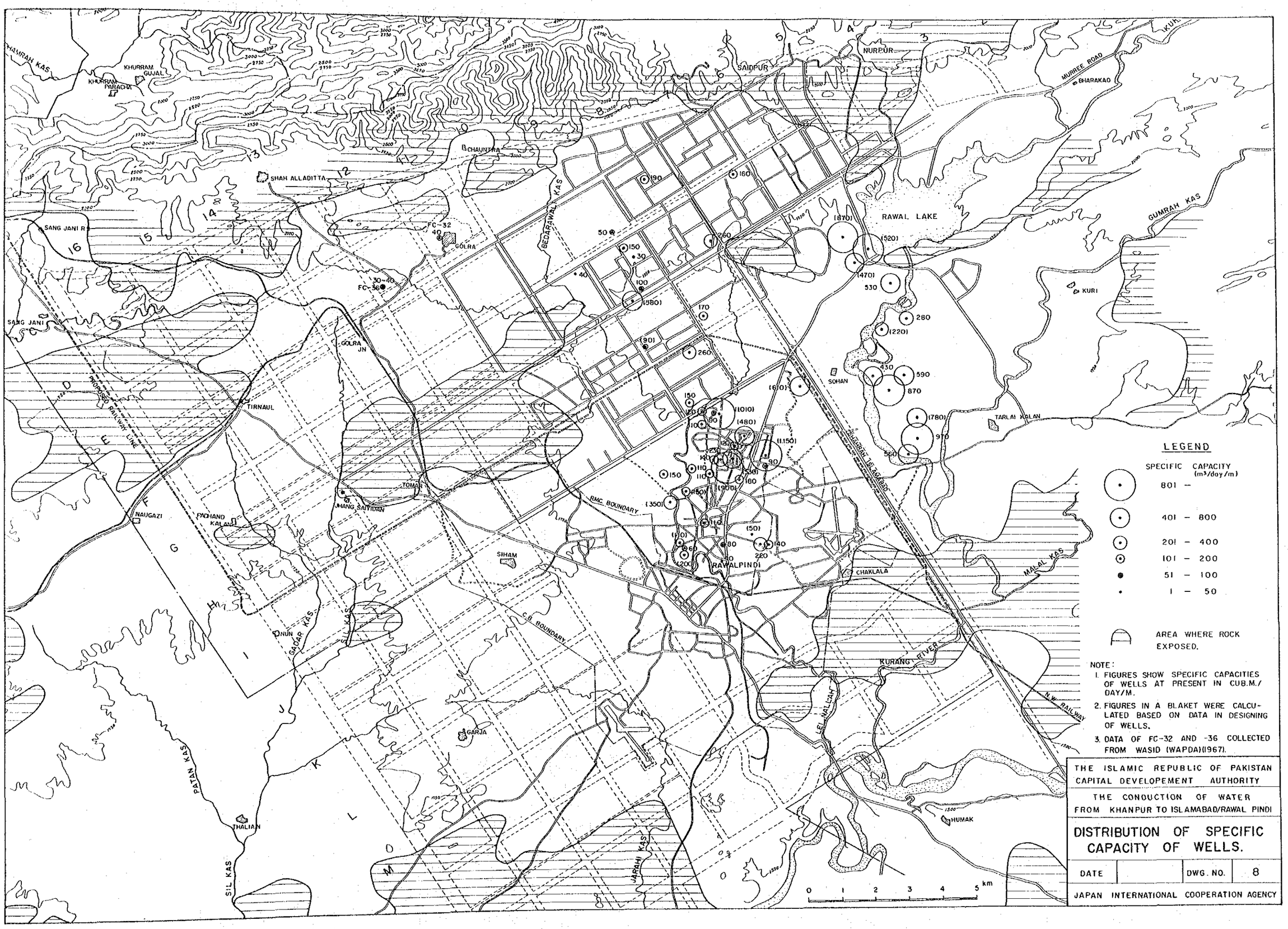
LEGEND
SPECIFIC CAPACITY (m³/day/m)
801 –
401 – 800
201 – 400
101 – 200
51 – 100
1 – 50
AREA WHERE ROCK EXPOSED.
NOTE:
1. FIGURES SHOW SPECIFIC CAPACITIES OF WELLS AT PRESENT IN CUB.M./DAY/M.
2. FIGURES IN A BLAKET WERE CALCULATED BASED ON DATA IN DESIGNING OF WELLS.
3. DATA OF FC-32 AND -36 COLLECTED FROM WASID (WAPDA)(1967).
THE ISLAMIC REPUBLIC OF PAKISTAN
CAPITAL DEVELOPEMENT AUTHORITY
THE CONDUCTION OF WATER FROM KHANPUR TO ISLAMABAD/RAWAL PINDI
DISTRIBUTION OF SPECIFIC CAPACITY OF WELLS.
DATE
DWG. NO. 8
JAPAN INTERNATIONAL COOPERATION AGENCY
RAWAL LAKE
RAWALPINDI
SAIDPUR
NURPUR
SHAH ALLADITTA
CHAUNTRA
GOLRA
GOLRA JN
TIRNAUL
SANG JANI
SANG JANI R.
NAUGAZI
PACHAND KALAN
JHANG SAIYIDAN
TOMAR
SIHAM
NUN
GARJA
THALIAN
SOHAN
TARLAI KALAN
CHAKLALA
HUMAK
KURI
KURANG RIVER
BHARAKAO
MURREE ROAD
GUMRAH KAS
MALAL KAS
BEDARWAL KAS
GADAR KAS
PATAN KAS
SIL KAS
JARALI KAS
KHURRAM GUJAL
KHURRAM PARACHA
HAMRAH KAS
PROPOSED RAILWAY LINE
RMC BOUNDARY
C.B. BOUNDARY
ISLAMABAD
N.W. RAILWAY
FC-32
FC-36
0 1 2 3 4 5 km

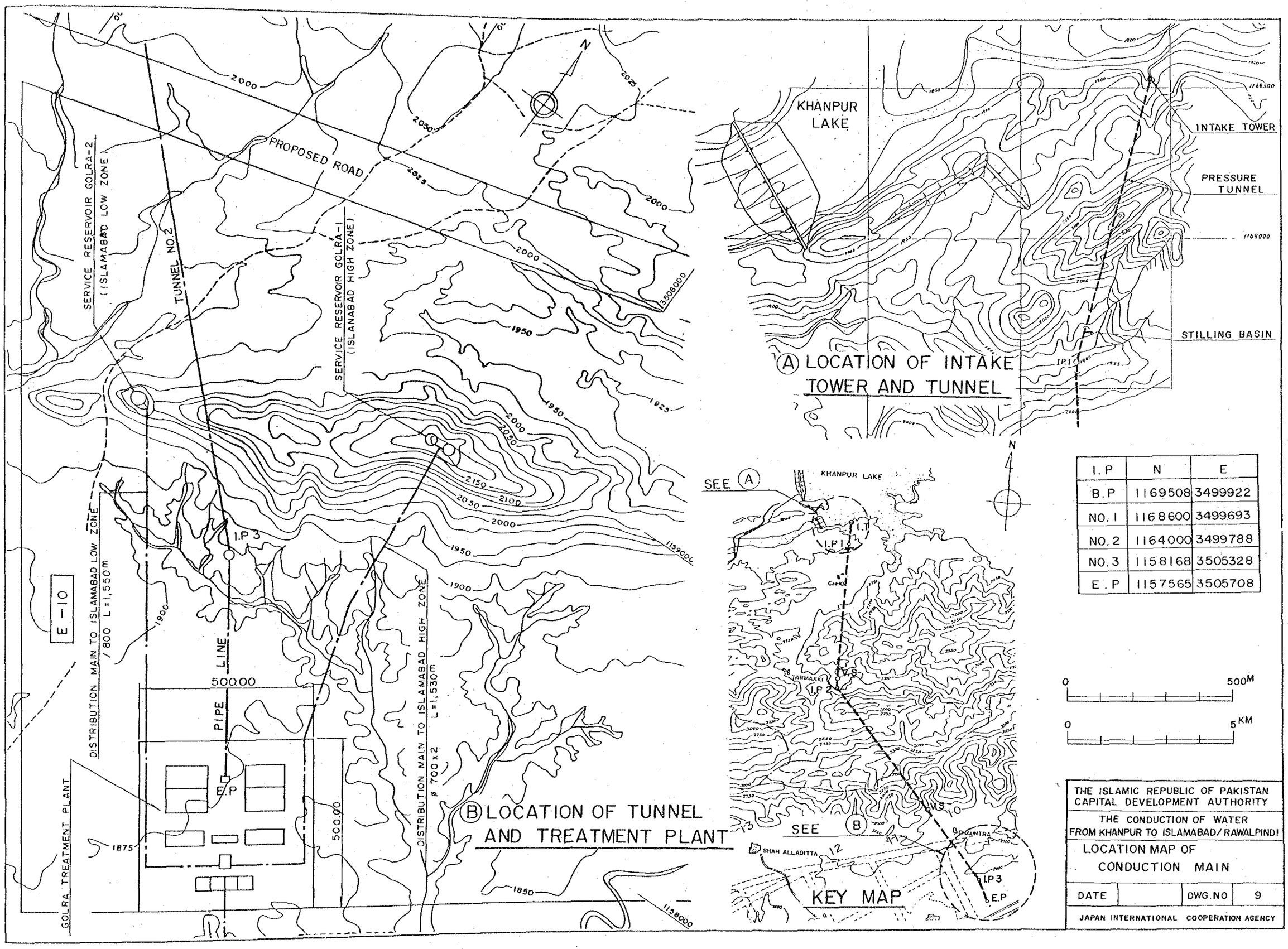

I.P	N	E
B.P	1169508	3499922
NO.1	1168600	3499693
NO.2	1164000	3499788
NO.3	1158168	3505328
E.P	1157565	3505708

THE ISLAMIC REPUBLIC OF PAKISTAN
CAPITAL DEVELOPMENT AUTHORITY

THE CONDUCTION OF WATER FROM KHANPUR TO ISLAMABAD/RAWALPINDI

LOCATION MAP OF CONDUCTION MAIN

DATE		DWG.NO	9

JAPAN INTERNATIONAL COOPERATION AGENCY

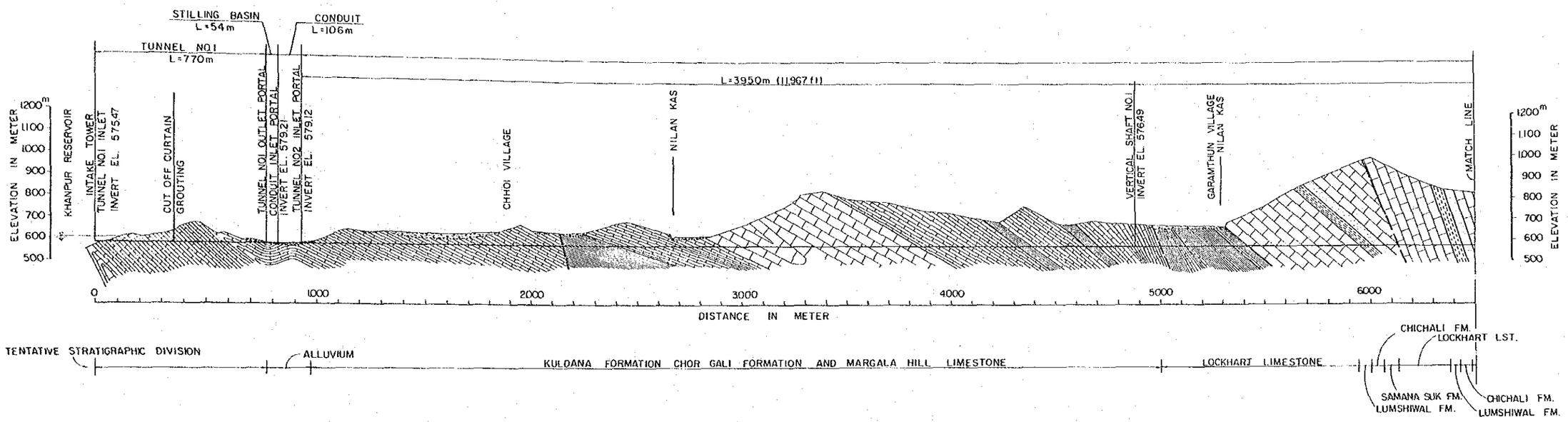

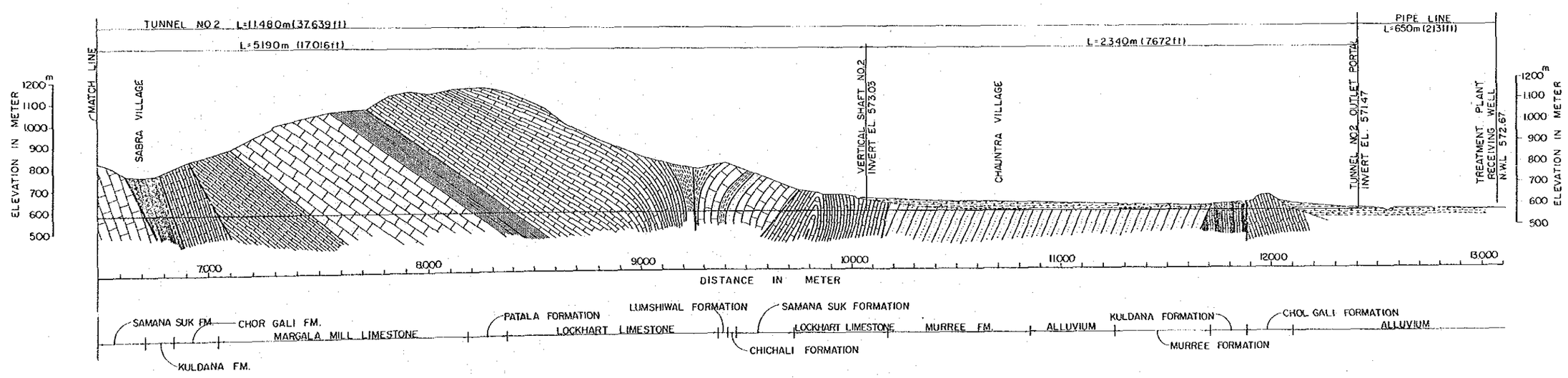

LEGEND

ROCK TYPE
TYPE I — MASSIVE LIMESTONE
TYPE II — CRACKED LIMESTONE
ALTERNATION OF LIMESTONE AND SHALE/MARL
MASSIVE MARL
SANDSTONE (CRETACEOUS)
TYPE III — SHALE
FISSILE MARL
ALTERNATION OF SHALE AVD MARL
ALTERNATION OF SANDSTONE AND MUDSTONE (MURREE FORMATION)
TYPE IV — OVRBURDEN (SILTY CLAY AND GRAVEL)
— — FAULT

NOTE: GEOLOGIC SECTION DEVELOPED FROM A GEOLOGIC MAP OF GEOLOGICAL SURVEY OF PAKISTAN, STUDY OF AERO-PHOTOGRAPHS, REVIEW OF NESPAK'S SECTIONS (1980) AND GEOLOGICAL RECONNAISSANCE.

THE ISLAMIC REPUBLIC OF PAKISTAN
CAPITAL DEVELOPMENT AUTHORITY
THE CONDUCTION OF WATER FROM KHANPUR TO ISLAMABAD/RAWALPINDI

GEOLOGICAL SECTION ALONG TUNNEL

DATE		DWG.NO	10

JAPAN INTERNATIONAL COOPERATION AGENCY

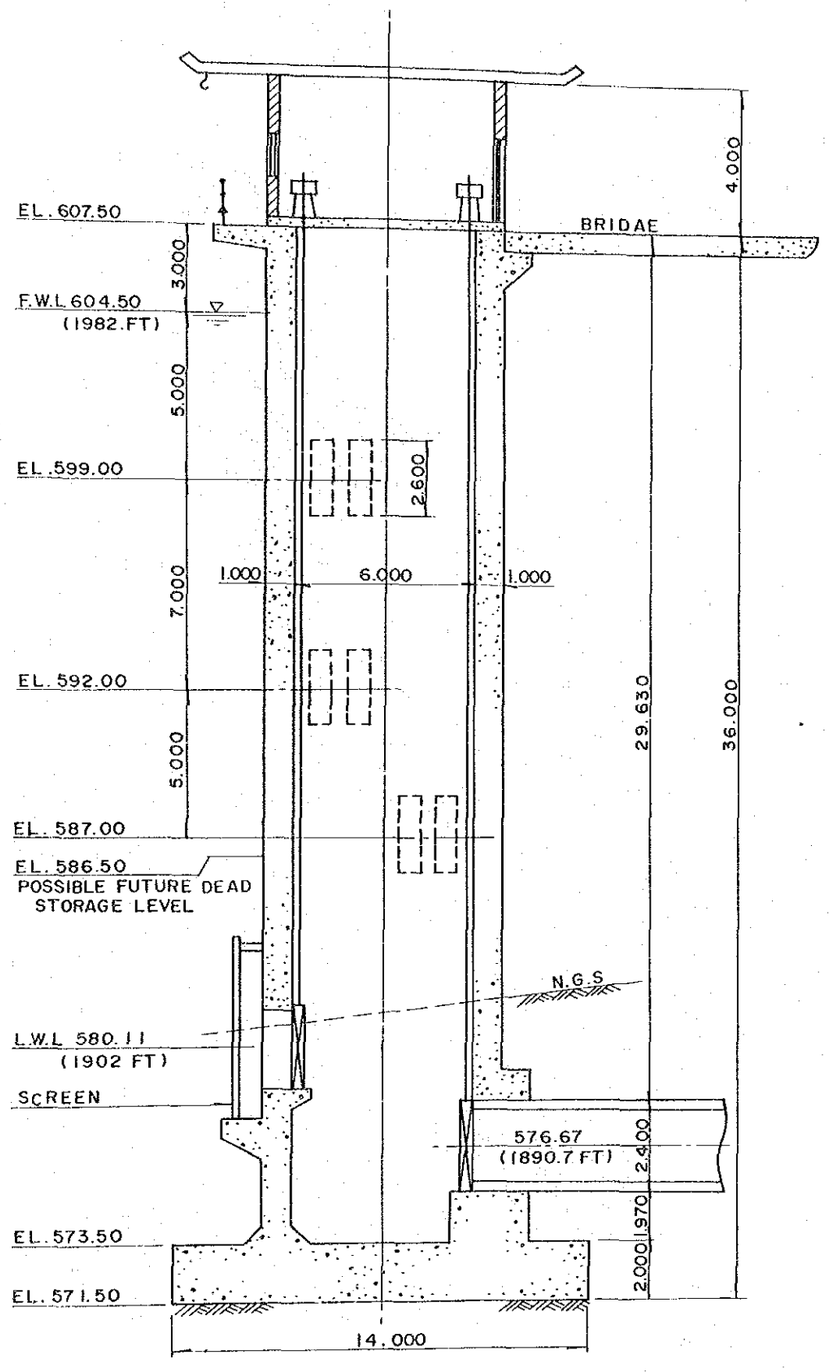

SECTION A-A SCALE 1:200

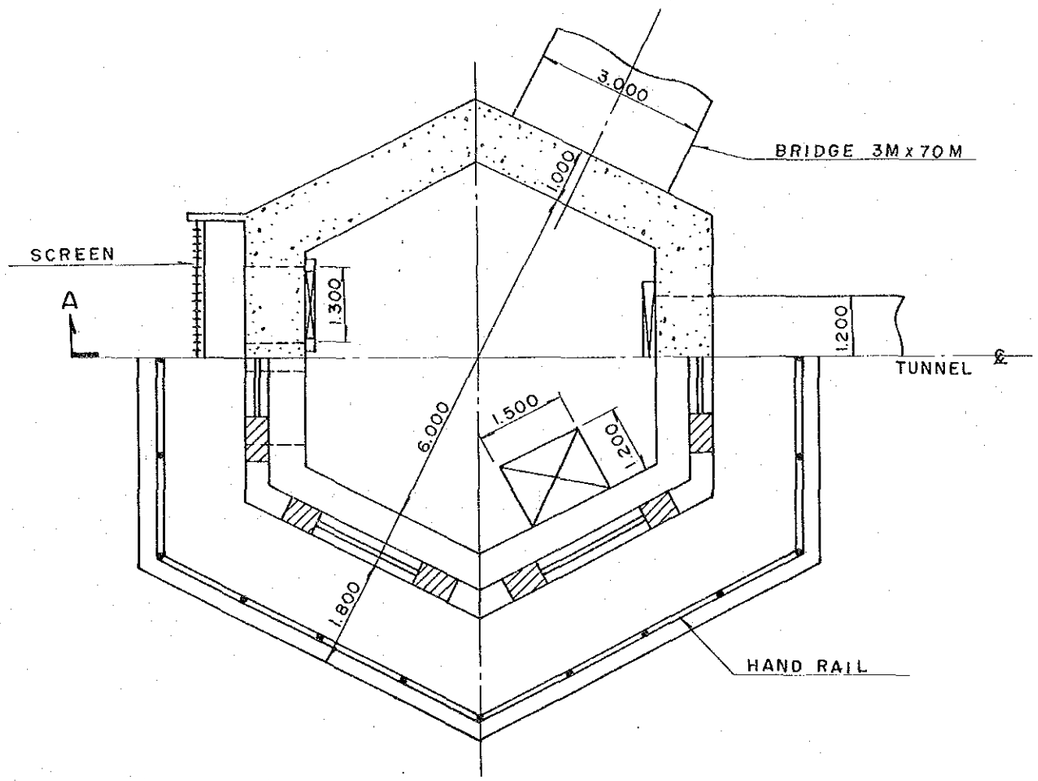

PLAN SCALE 1:100

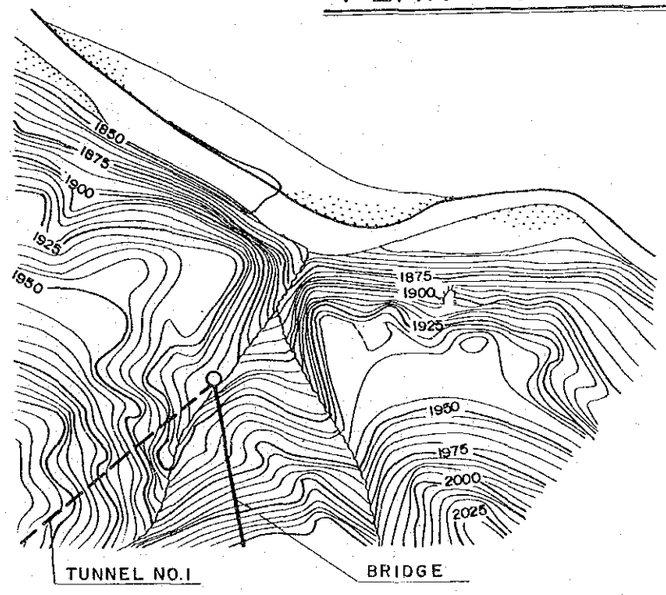

LOCATION MAP SCALE 1:3,000

THE ISLAMIC REPUBLIC OF PAKISTAN
CAPITAL DEVELOPMENT AUTHORITY

THE CONDUCTION OF WATER
FROM KHANPUR TO ISLAMABAD/RAWALPIND

INTAKE TOWER

DATE		DWG. NO.	11

JAPAN INTERNATIONAL COOPERATION AGENCY

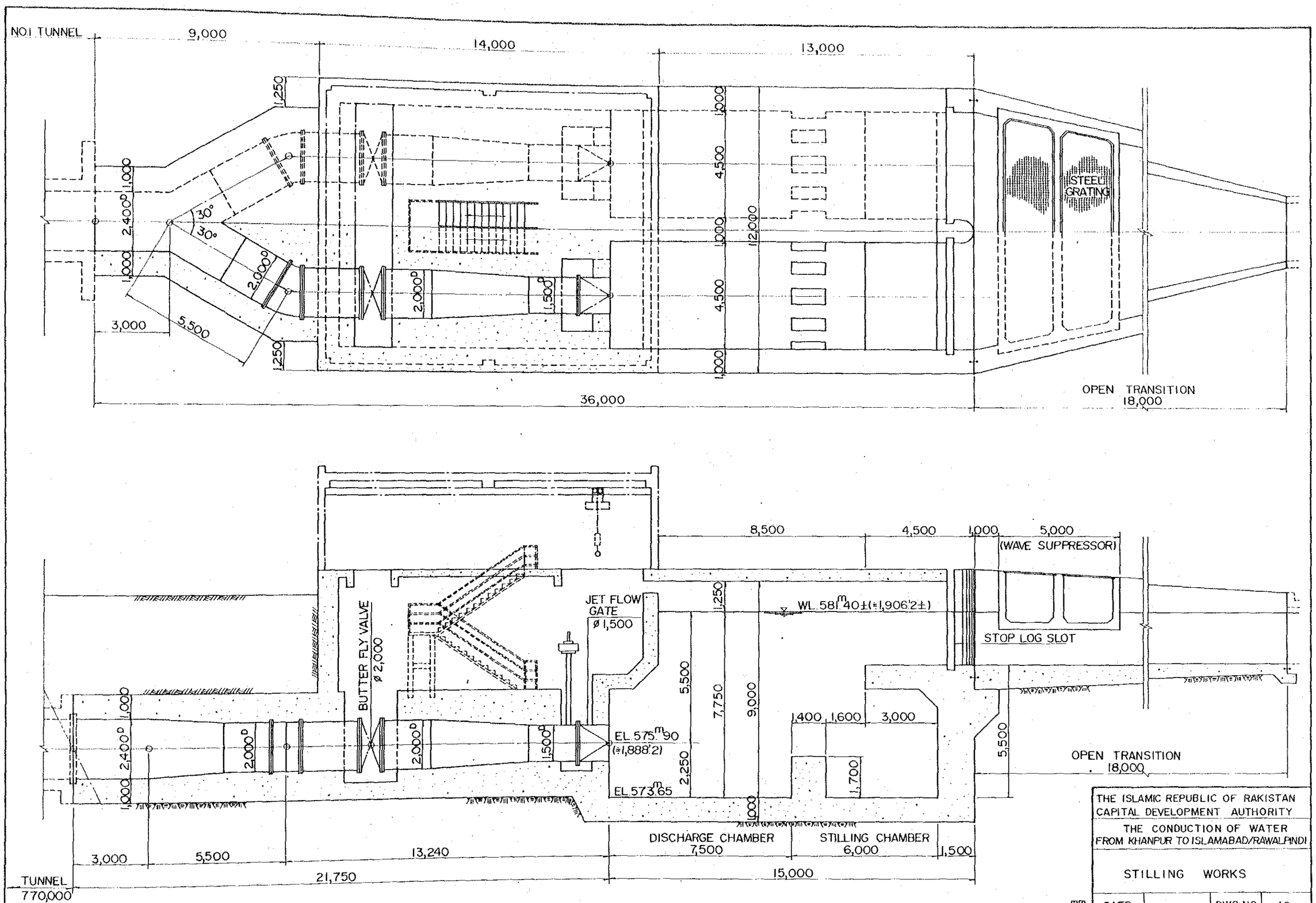

LONGITUDINAL SECTION

THE ISLAMIC REPUBLIC OF PAKISTAN CAPITAL DEVELOPMENT AUTHORITY			
THE CONDUCTION OF WATER FROM KHANPUR TO ISLAMABAD/RAWALPINDI			
STILLING WORKS			
DATE		DWG. NO	12
JAPAN INTERNATIONAL COOPERATION AGENCY			

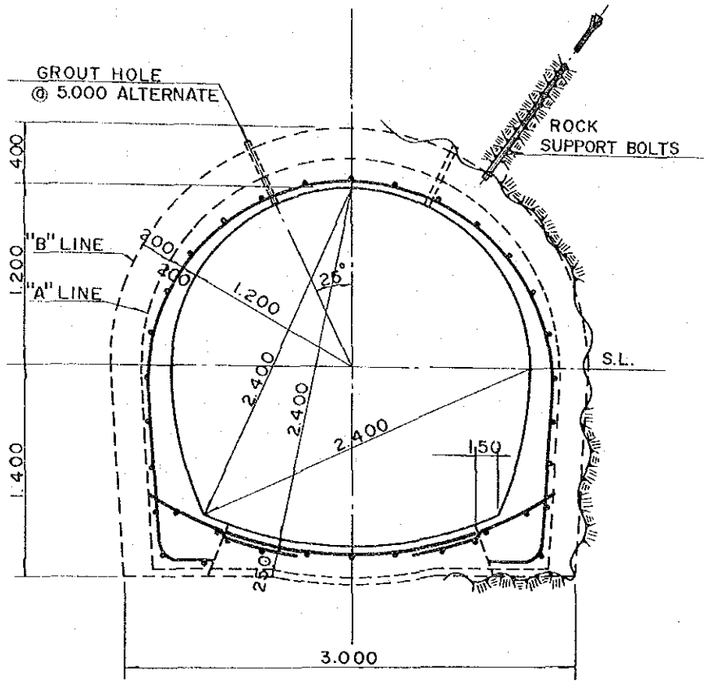

TYPE - A

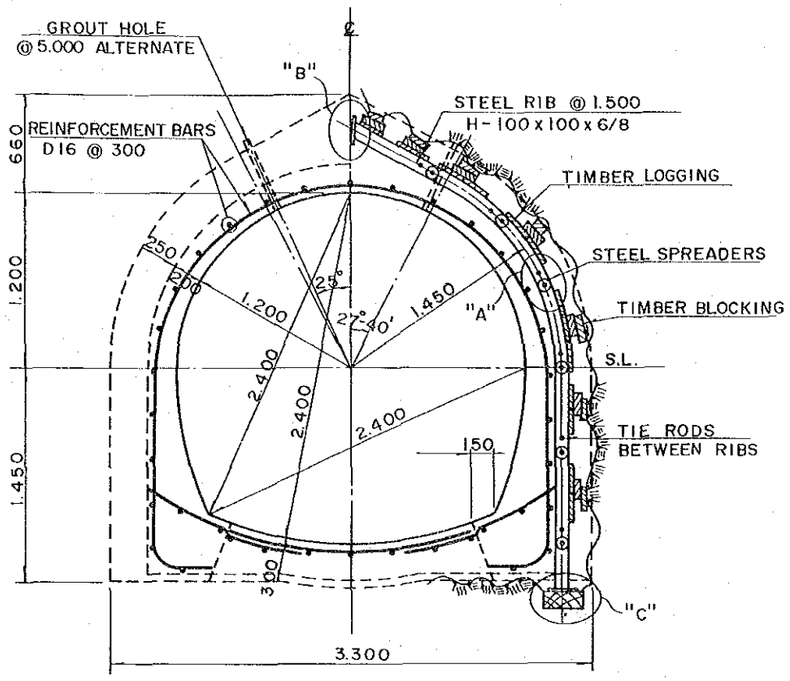

TYPE - B

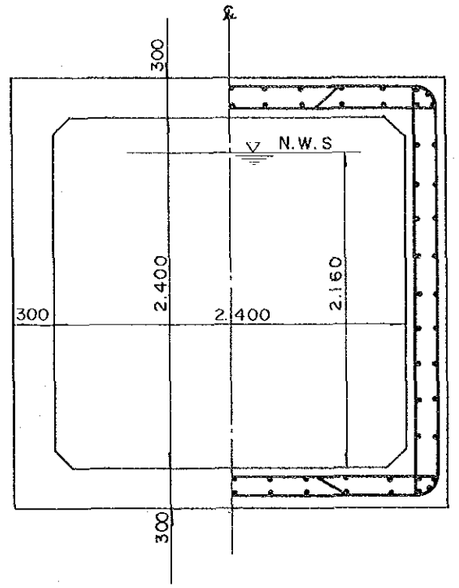

CONDUIT

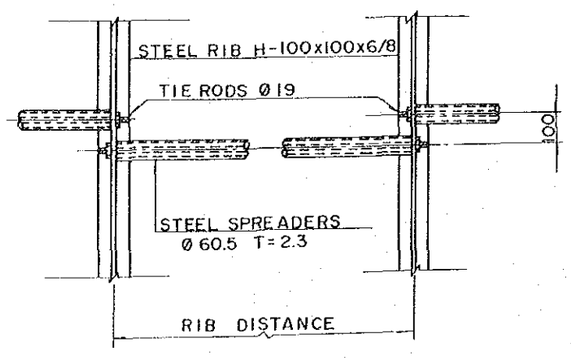

DETAIL "A"

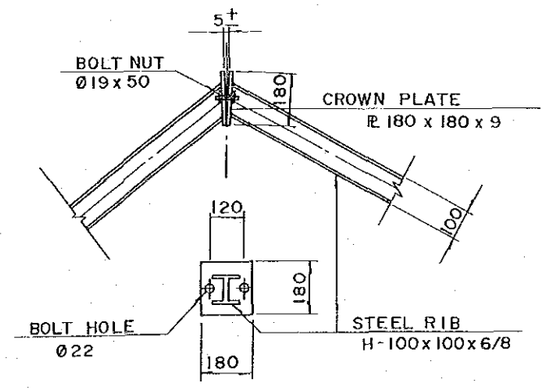

DETAIL "B"

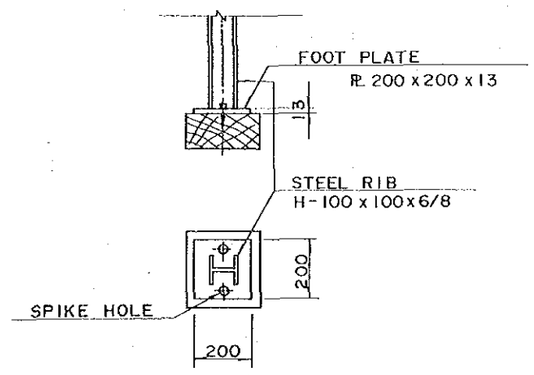

DETAIL "C"

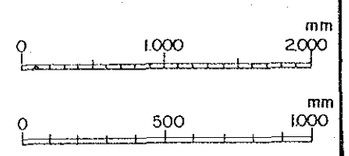

THE ISLAMIC REPUBLIC OF PAKISTAN
CAPITAL DEVELOPMENT AUTHORITY

THE CONDUCTION OF WATER
FROM KHANPUR TO ISLAMABAD/RAWALPIND

TUNINEL NO.1 & CONDUIT
TYPICAL SECTION

DATE		DWG. NO	13

JAPAN INTERNATIONAL COOPERATION AGENCY

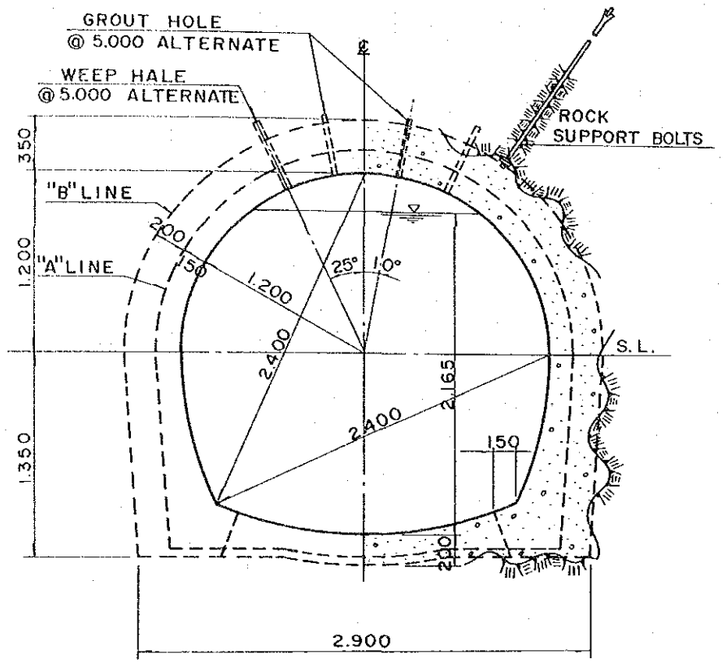

TYPE - A

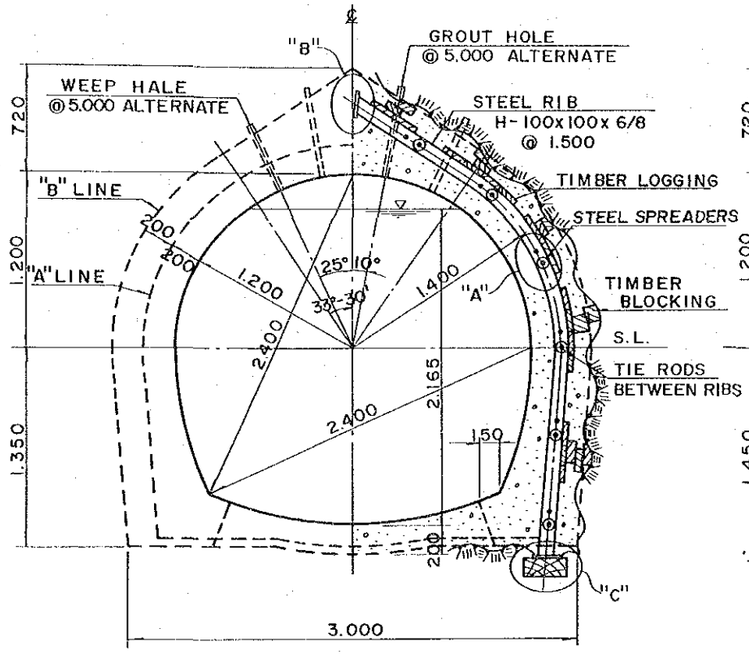

TYPE - B

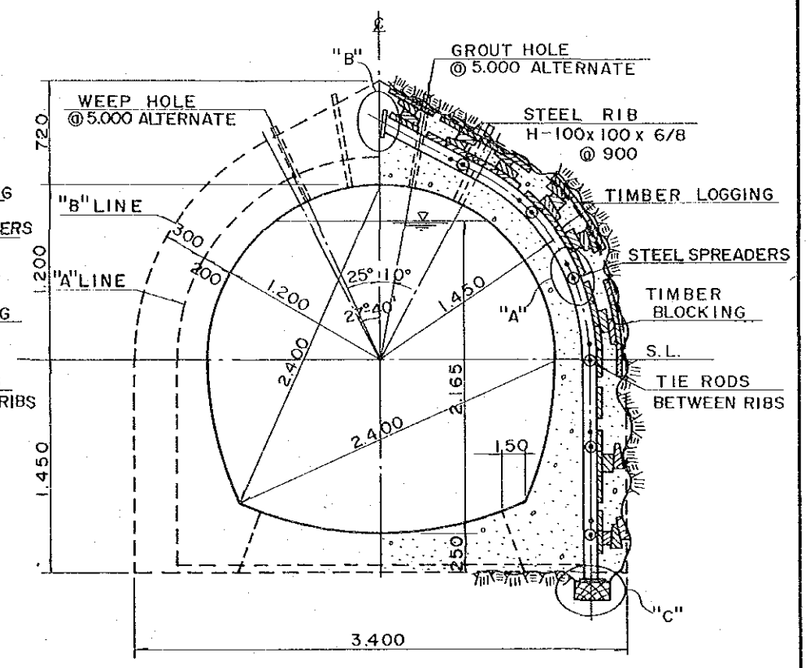

TYPE - C

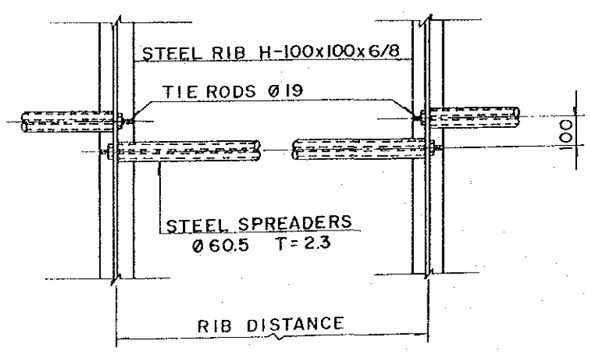

DETAIL "A"

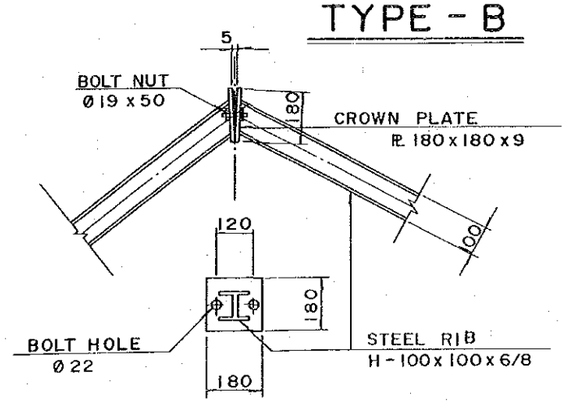

DETAIL "B"

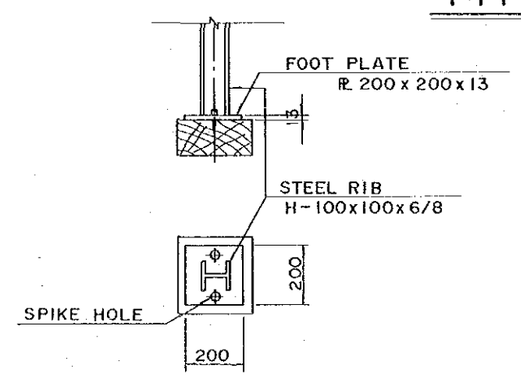

DETAIL "C"

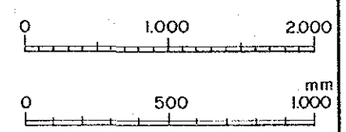

THE ISLAMIC REPUBLIC OF PAKISTAN
CAPITAL DEVELOPMENT AUTHORITY

THE CONDUCTION OF WATER
FROM KHANPUR TO ISLAMABAD/RAWALPIND

TUNNEL NO. 2
TYPICAL SECTION

DATE		DWG. NO.	14

JAPAN INTERNATIONAL COOPERATION AGENCY

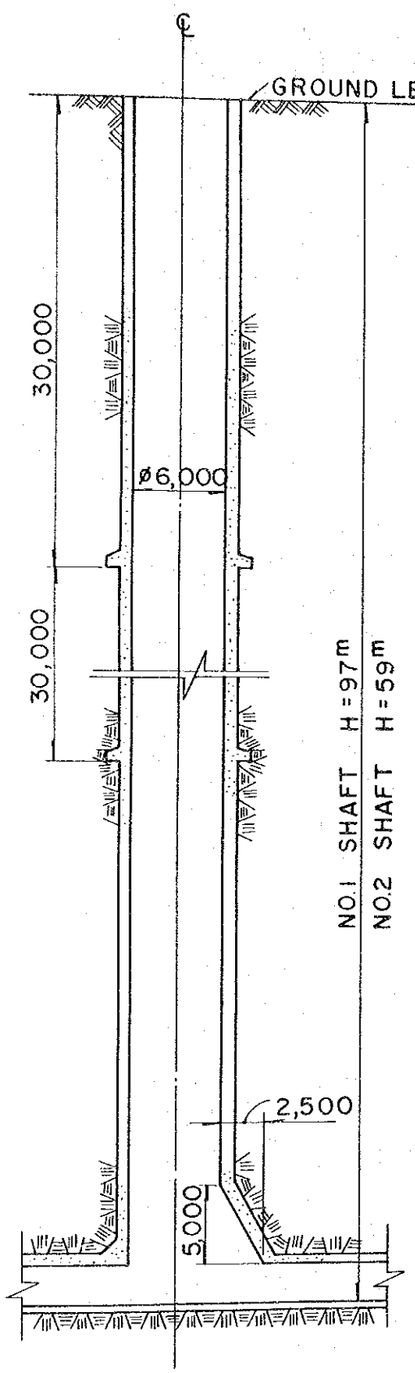

SIDE VIEW SCALE 1:400

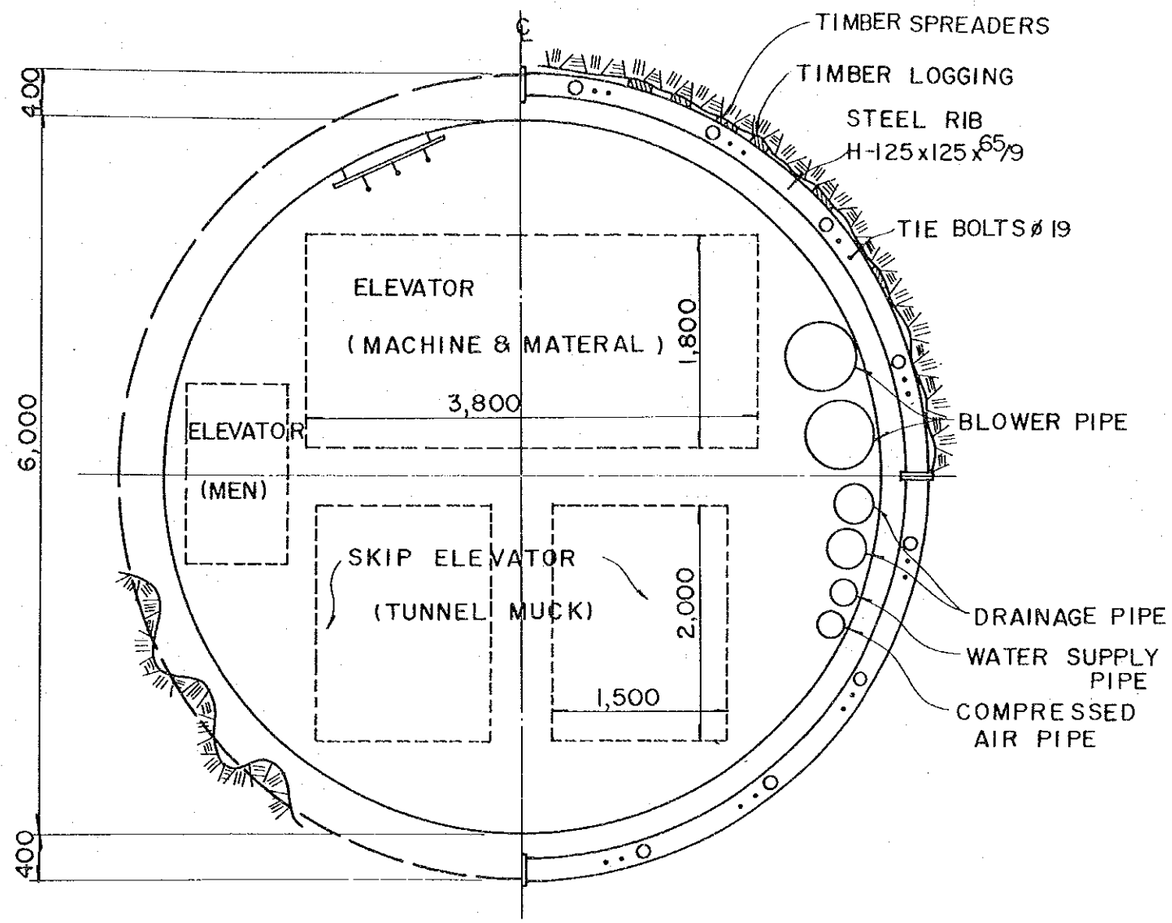

PLAN SCALE 1:50

THE ISLAMIC REPUBLIC OF PAKISTAN CAPITAL DEVELOPMENT AUTHORITY			
THE CONDUCTION OF WATER FROM KHANPUR TO ISLAMABAD/RAWALPINDI			
VERTICAL SHAFT			
DATE		DWG.NO	15
JAPAN INTERNATIONAL COOPERATION AGENCY			

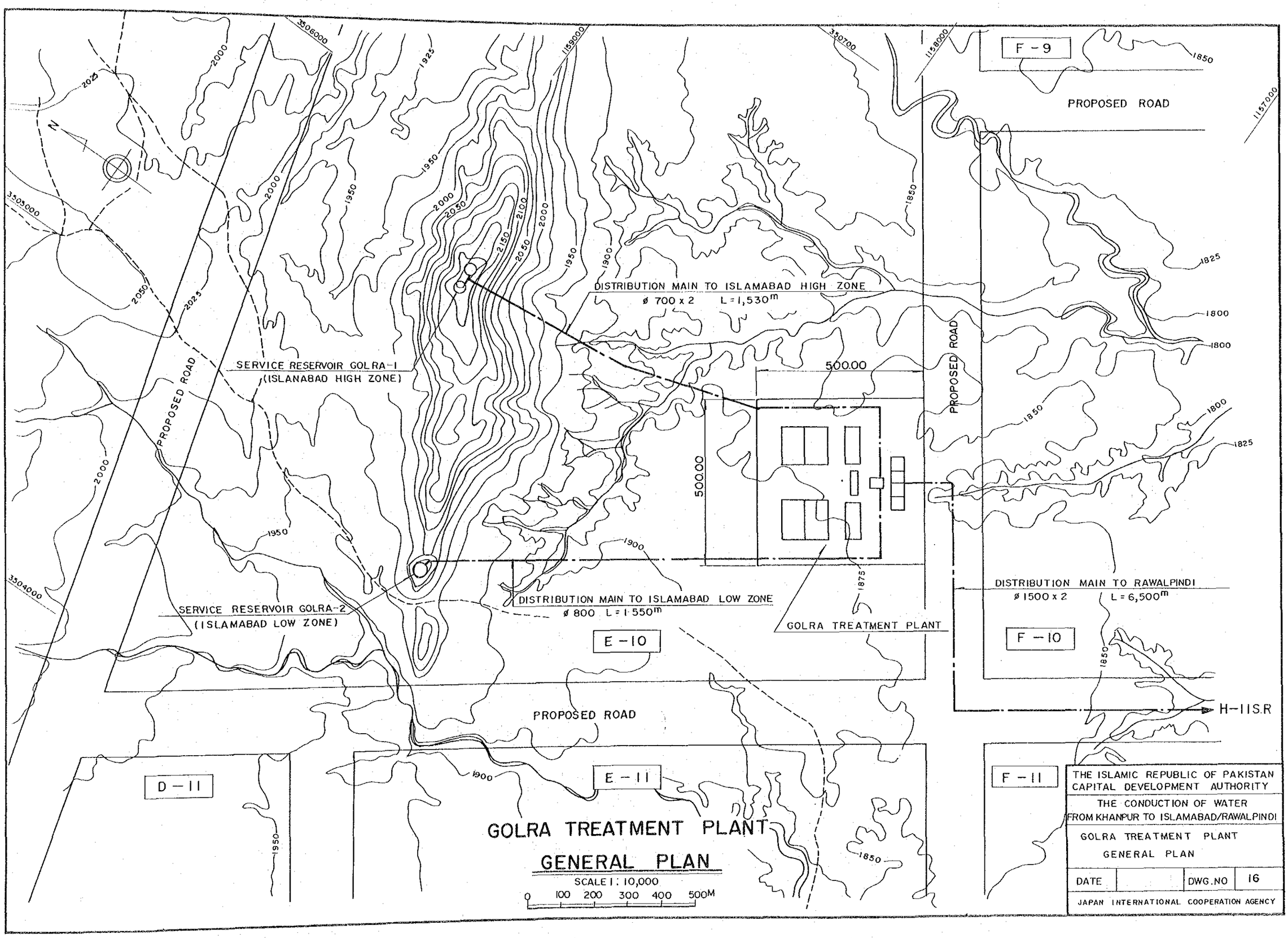
F - 9
PROPOSED ROAD
DISTRIBUTION MAIN TO ISLAMABAD HIGH ZONE
ø 700 x 2 L = 1,530m
SERVICE RESERVOIR GOLRA-1
(ISLANABAD HIGH ZONE)
PROPOSED ROAD
500.00
500.00
PROPOSED ROAD
DISTRIBUTION MAIN TO ISLAMABAD LOW ZONE
ø 800 L = 1,550m
SERVICE RESERVOIR GOLRA-2
(ISLAMABAD LOW ZONE)
GOLRA TREATMENT PLANT
DISTRIBUTION MAIN TO RAWALPINDI
ø 1500 x 2 L = 6,500m
E - 10
F - 10
H-11S.R
PROPOSED ROAD
D - 11
E - 11
F - 11
GOLRA TREATMENT PLANT
GENERAL PLAN
SCALE 1 : 10,000
0 100 200 300 400 500M
THE ISLAMIC REPUBLIC OF PAKISTAN
CAPITAL DEVELOPMENT AUTHORITY
THE CONDUCTION OF WATER
FROM KHANPUR TO ISLAMABAD/RAWALPINDI
GOLRA TREATMENT PLANT
GENERAL PLAN
DATE
DWG.NO 16
JAPAN INTERNATIONAL COOPERATION AGENCY

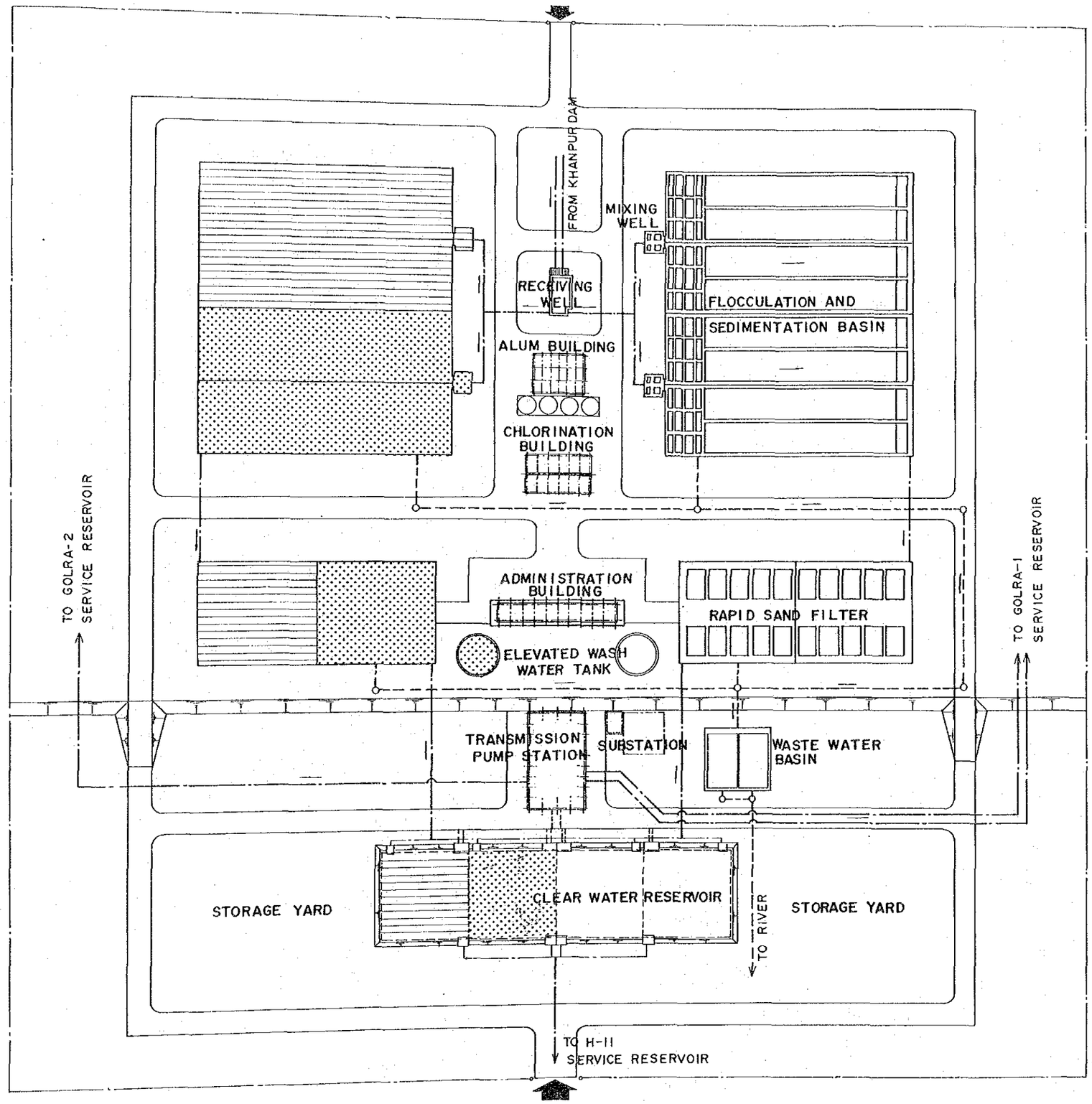

0 50.0 100.0 M

SCALE

PHASE I

PHASE II

PHASE III

THE ISLAMIC REPUBLIC OF PAKISTAN
CAPITAL DEVELOPMENT AUTHORITY

THE CONDUCTION OF WATER
FROM KHANPUR TO ISLAMABAD/RAWALPINDI

GENERAL LAYOUT OF
GOLRA WATER TREATMENT PLANT

DATE		DWG.NO	17

JAPAN INTERNATIONAL COOPERATION AGENCY

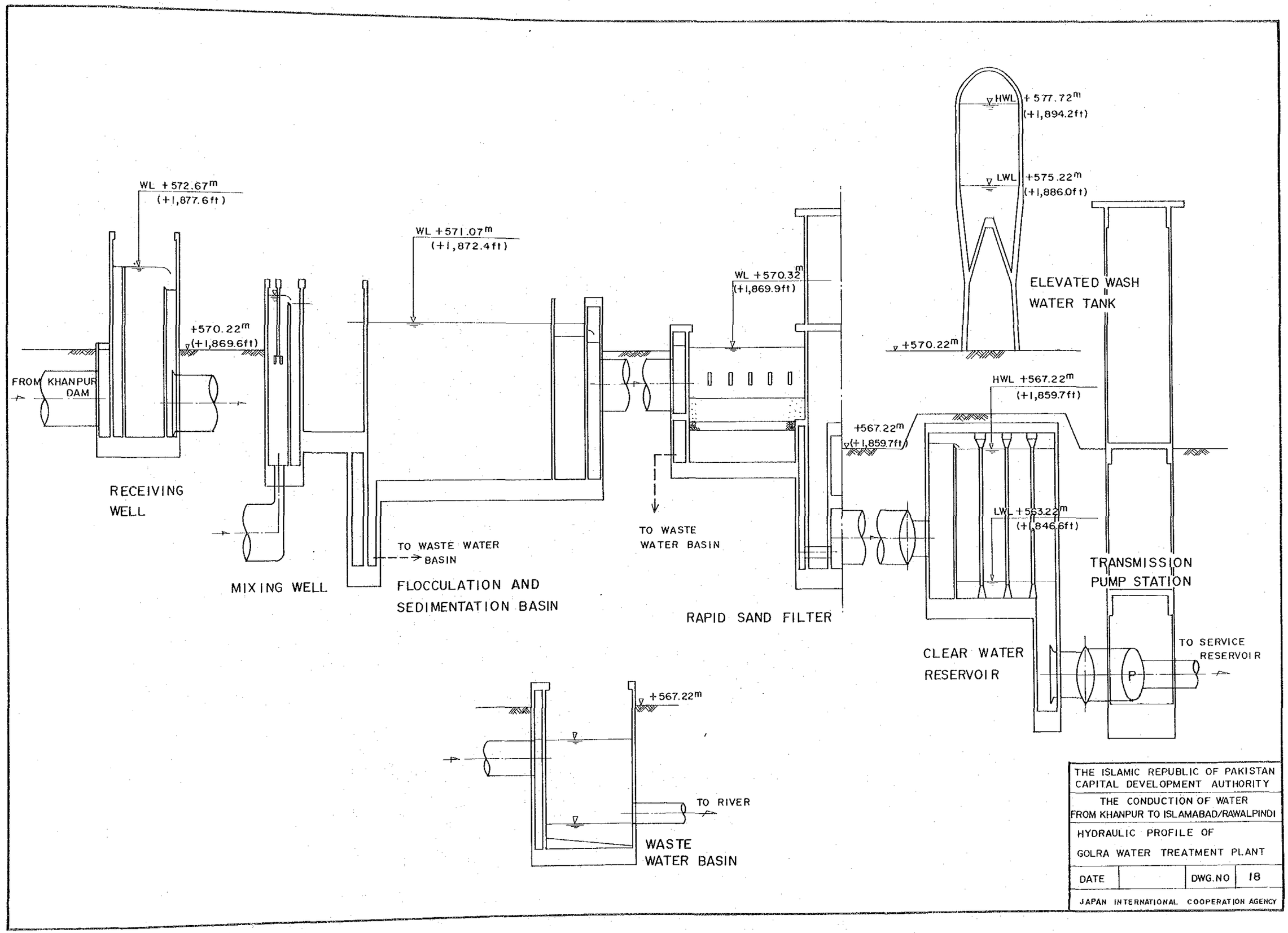

THE ISLAMIC REPUBLIC OF PAKISTAN CAPITAL DEVELOPMENT AUTHORITY			
THE CONDUCTION OF WATER FROM KHANPUR TO ISLAMABAD/RAWALPINDI			
HYDRAULIC PROFILE OF GOLRA WATER TREATMENT PLANT			
DATE		DWG.NO	18
JAPAN INTERNATIONAL COOPERATION AGENCY			

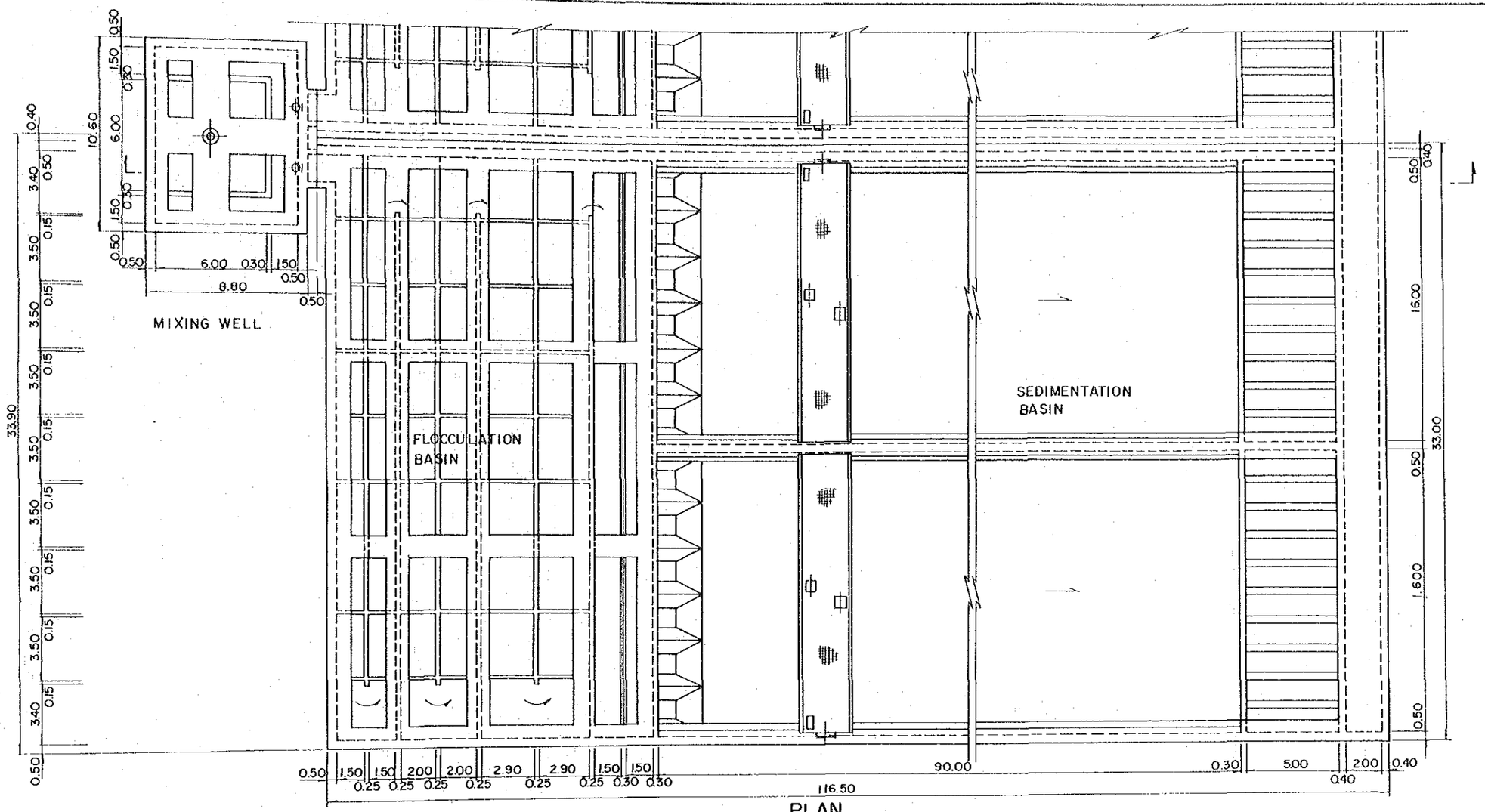

PLAN

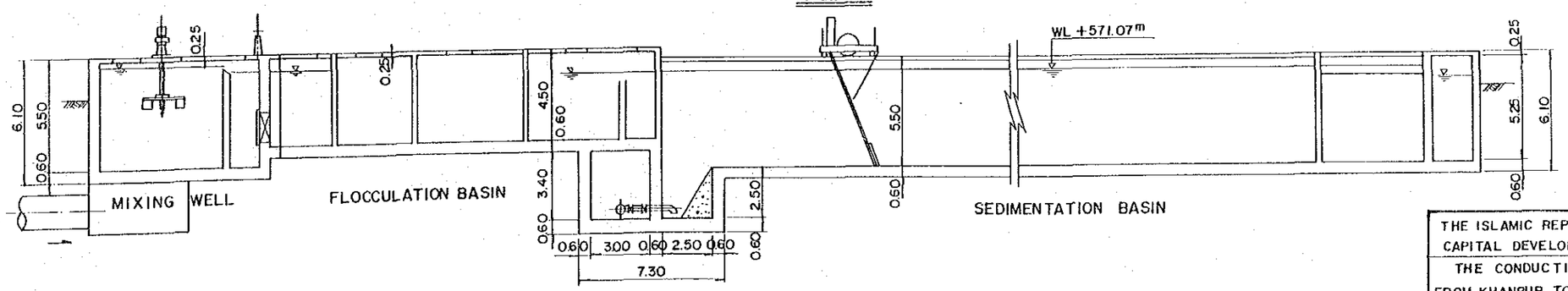

SECTION

SCALE 1: 250

0 5 10m

THE ISLAMIC REPUBLIC OF PAKISTAN CAPITAL DEVELOPMENT AUTHORITY			
THE CONDUCTION OF WATER FROM KHANPUR TO ISLAMABAD/RAWALPINDI			
MIXING WELL FLOCCULATION & SEDIMENTATION BASIN			
DATE		DWG. NO	19
JAPAN INTERNATIONAL COOPERATION AGENCY			

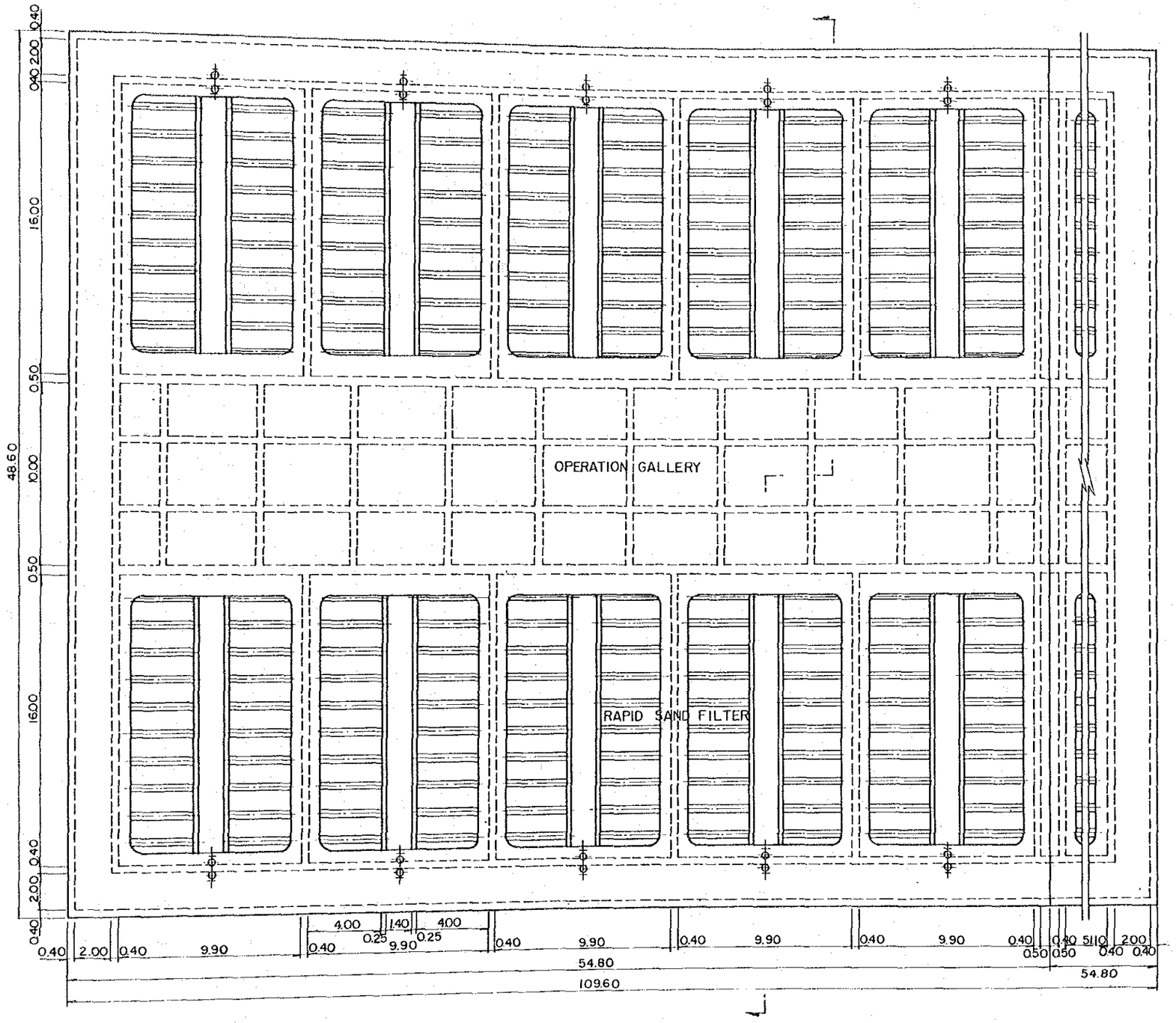

PLAN

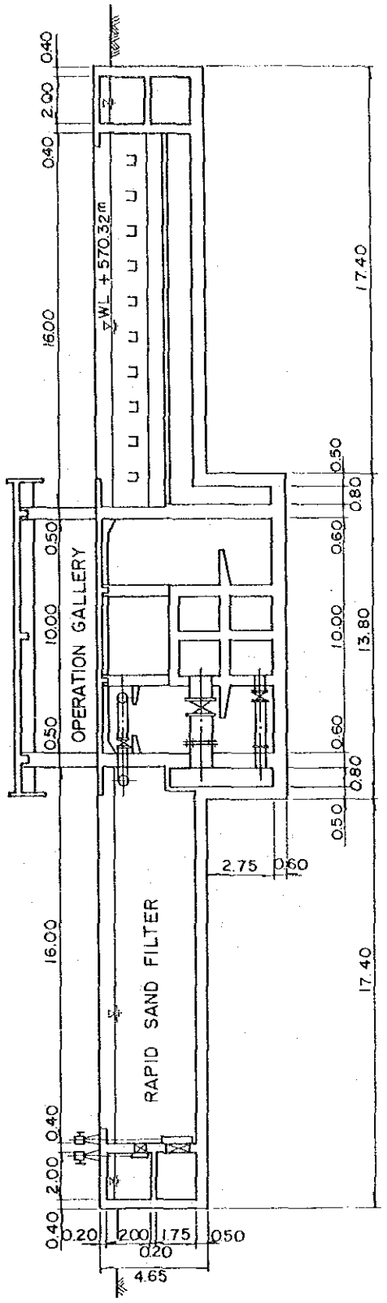

SECTION

SCALE 1 : 250

0 5 10m

THE ISLAMIC REPUBLIC OF PAKISTAN CAPITAL DEVELOPMENT AUTHORITY	
THE CONDUCTION OF WATER FROM KHANPUR TO ISLAMABAD/RAWALPINDI	
RAPID SAND FILTER	
DATE	DWG. NO 20
JAPAN INTERNATIONAL COOPERATION AGENCY	

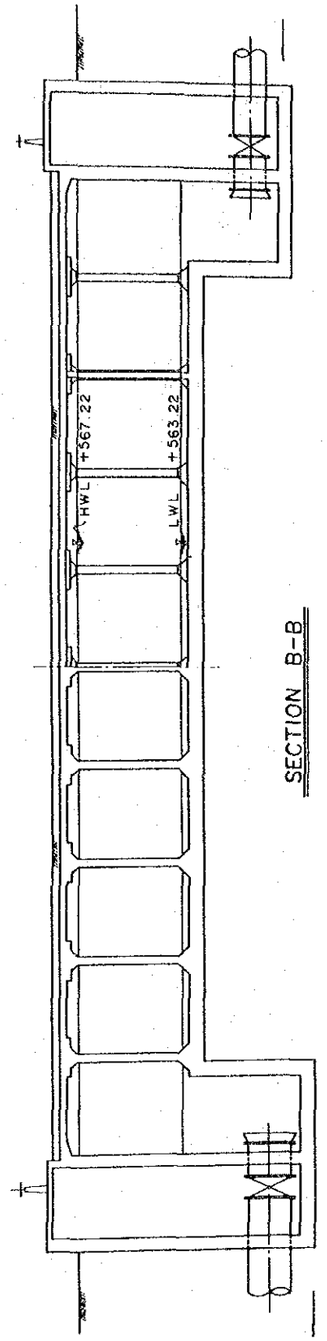

SECTION B-B

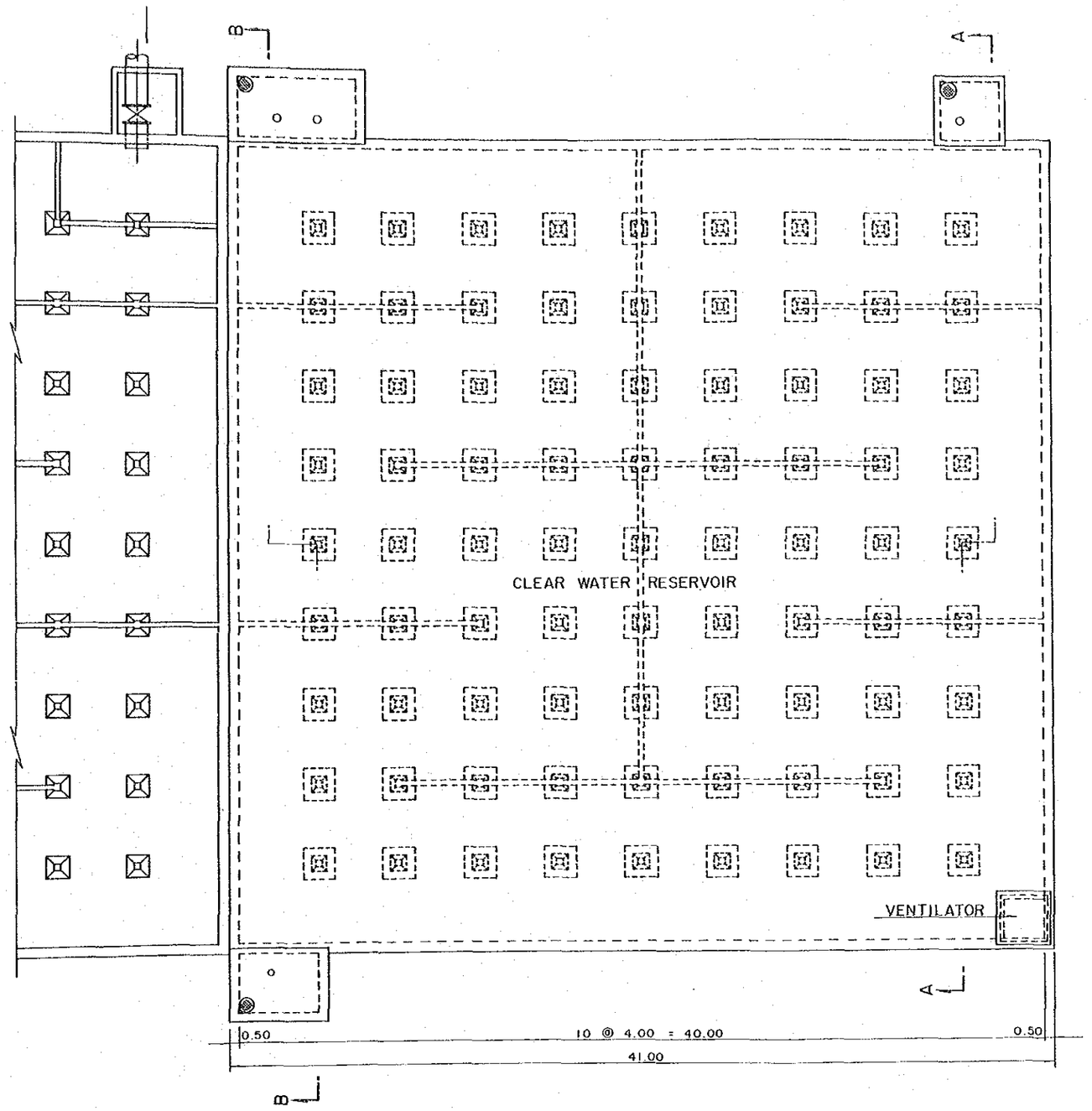

PLAN

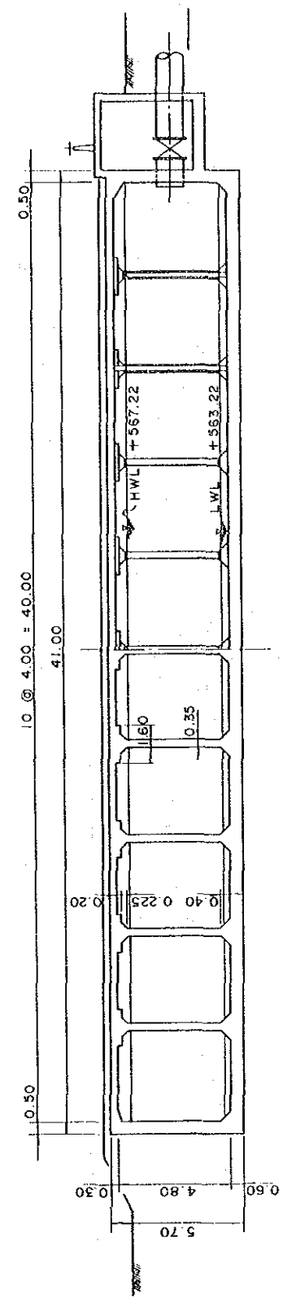

SECTION A-A

SCALE 1 : 250

0 5 10 m

THE ISLAMIC REPUBLIC OF PAKISTAN CAPITAL DEVELOPMENT AUTHORITY			
THE CONDUCTION OF WATER FROM KHANPUR TO ISLAMABAD RAWALPINDI			
CLEAR WATER RESERVOIR			
DATE		DWG. NO	21
JAPAN INTERNATIONAL COOPERATION AGENCY			

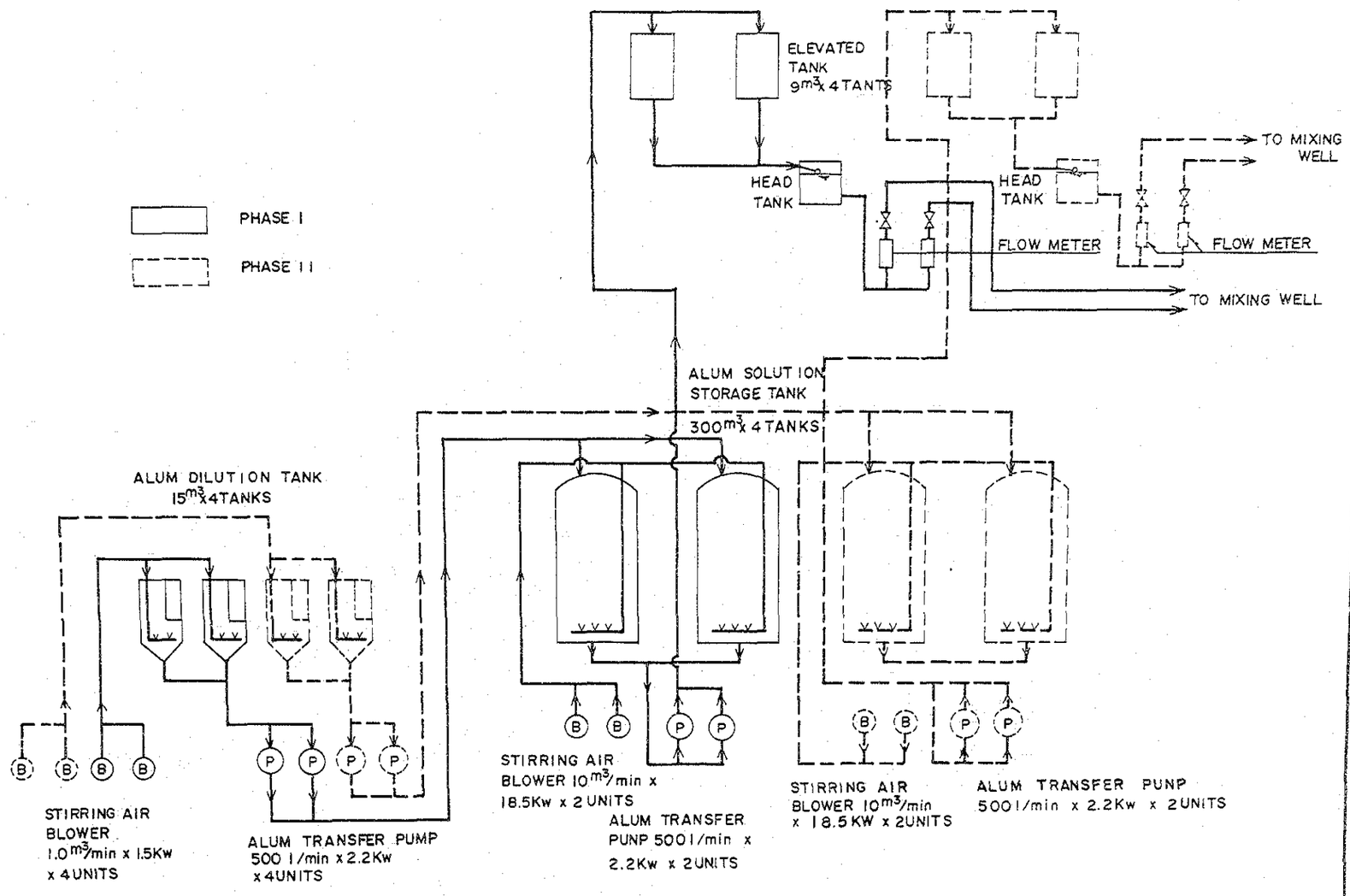

ALUM FEED SYSTEM

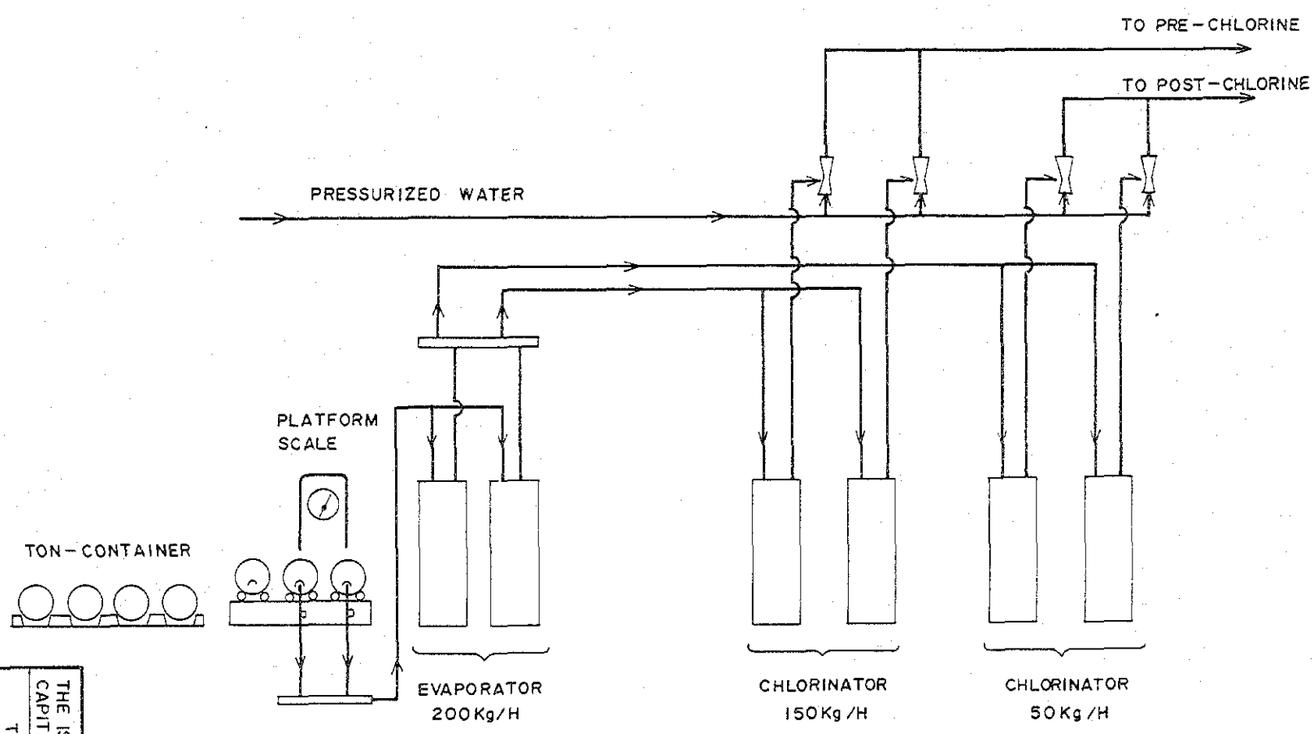

CHLORINATION FEED SYSTEM

THE ISLAMIC REPUBLIC OF PAKISTAN CAPITAL DEVELOPMENT AUTHORITY	
THE CONDUCTION OF WATER FROM KHANPUR TO ISLAMABAD/RAWALPINDI	
ALOM & CHLORINATION SYSTEM FLOW DIAGRAM	DATE
	DWG. NO 22
JAPAN INTERNATIONAL COOPERATION AGENCY	

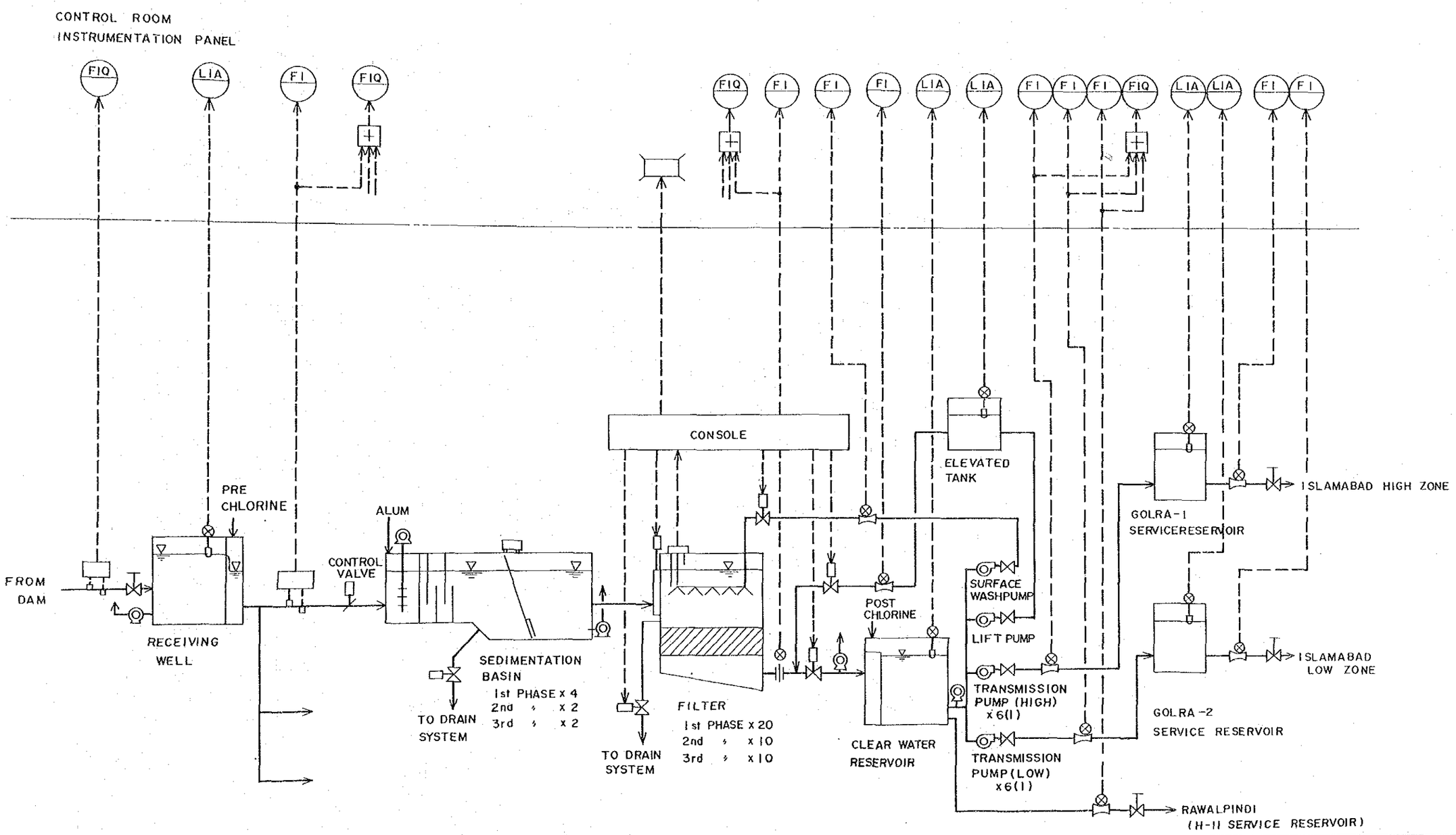

THE ISLAMIC REPUBLIC OF PAKISTAN CAPITAL DEVELOPMENT AUTHORITY			
THE CONDUCTION OF WATER FROM KHANPUR TO ISLAMABAD/RAWALPINDI			
INSTRUMENTATION DIAGRAM			
DATE		DWG.NO	23
JAPAN INTERNATIONAL COOPERATION AGENCY			

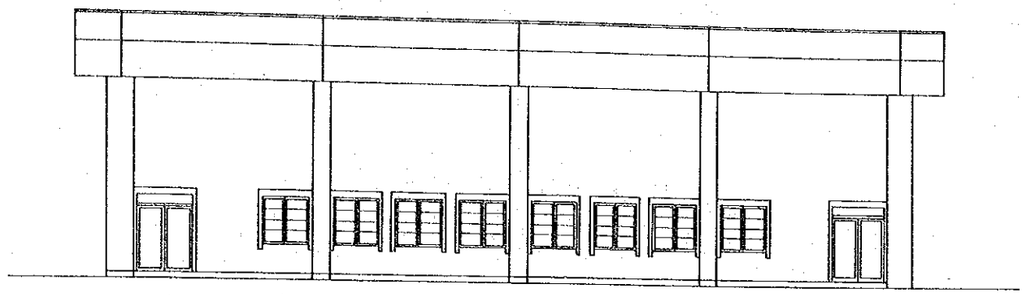

NORTH ELEVATION

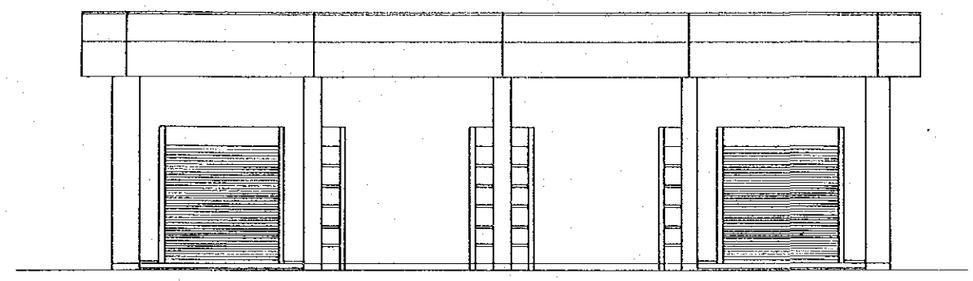

SOUTH ELEVATION

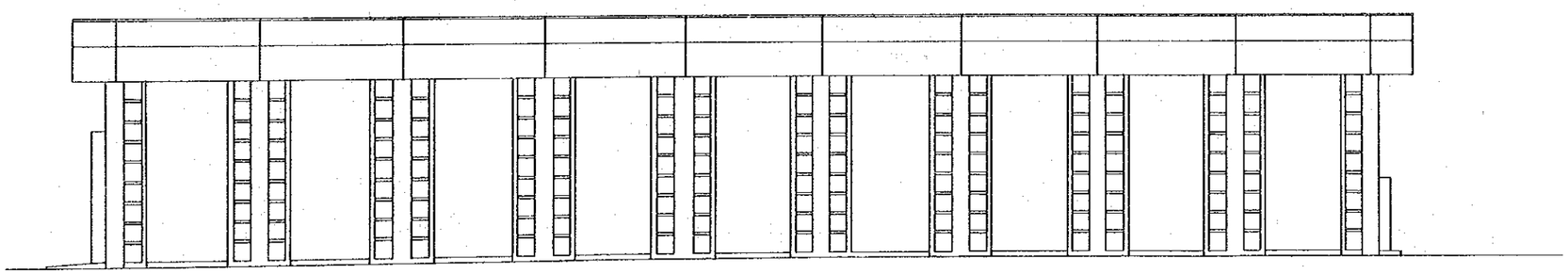

WEST (EAST) ELEVATION

SCALE 1:200

0 5 10m

THE ISLAMIC REPUBLIC OF PAKISTAN CAPITAL DEVELOPMENT AUTHORITY			
THE CONDUCTION OF WATER FROM KHANPUR TO ISLAMABAD/RAWALPINDI			
PUMPING STATION ELEVATION			
DATE		DWG.NO	24
JAPAN INTERNATIONAL COOPERATION AGENCY			

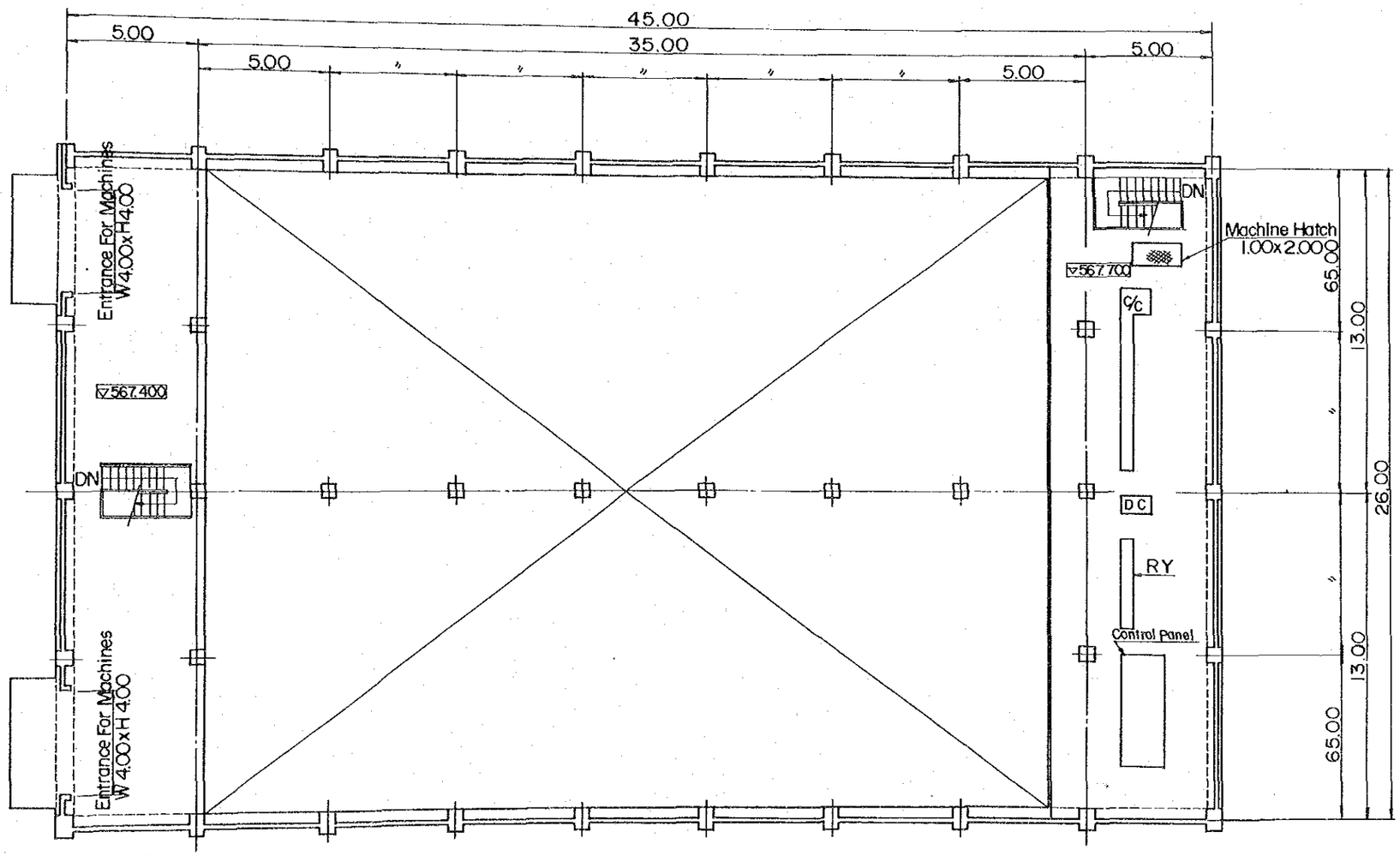

GROUND FLOOR

PLAN

SCALE 1:200

0 5m 10m

THE ISLAMIC REPUBLIC OF PAKISTAN CAPITAL DEVELOPMENT AUTHORITY			
THE CONDUCTION OF WATER FROM KHANPUR TO ISLAMABAD/RAWALPINDI			
PUMPING STATION GROUND FLOOR PLAN			
DATE		DWG.NO	25
JAPAN INTERNATIONAL COOPERATION AGENCY			

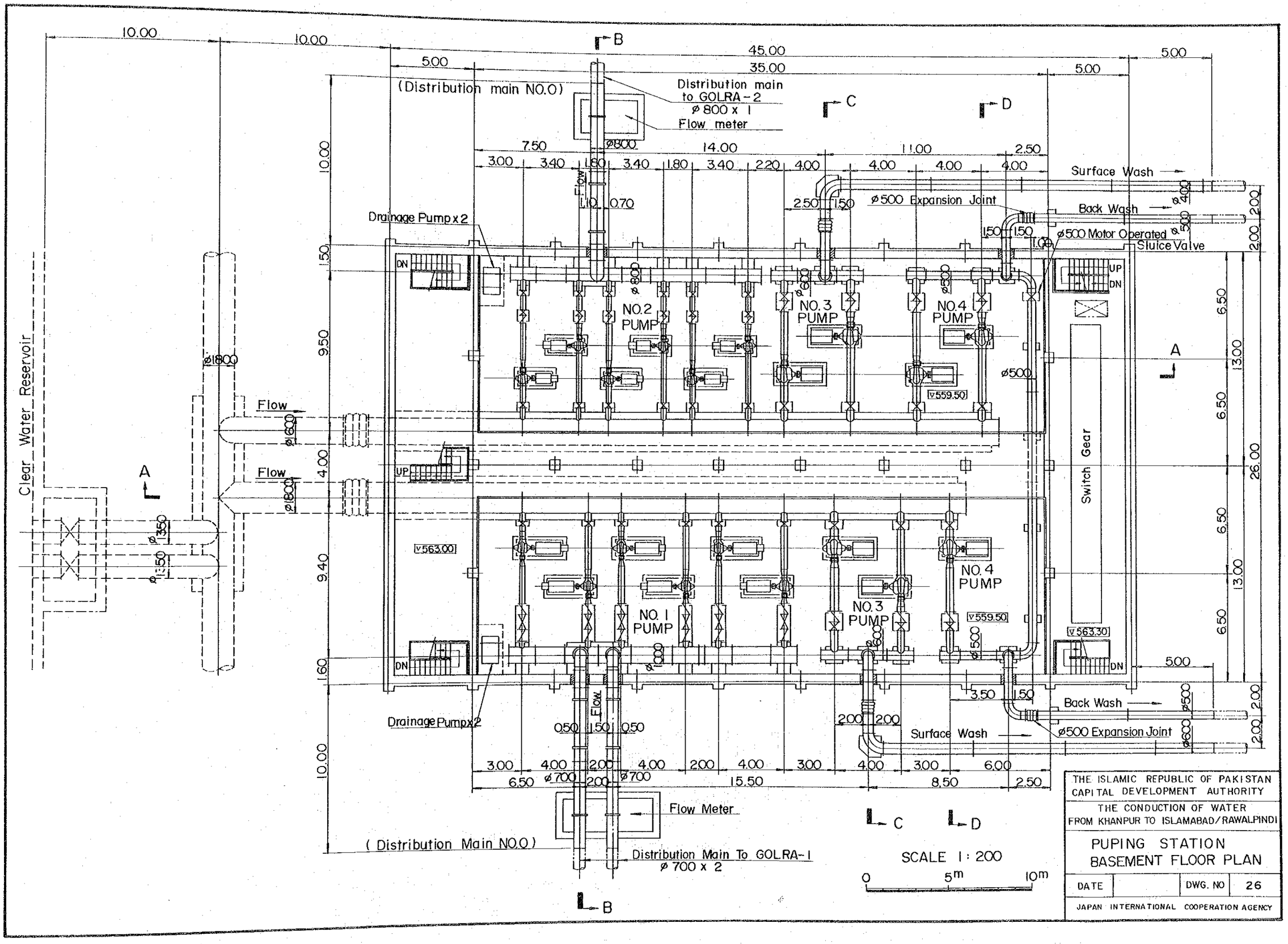
Distribution main NO.0
Distribution main to GOLRA-2 ø 800 x 1
Flow meter
Surface Wash
Back Wash
ø500 Expansion Joint
ø500 Motor Operated Sluice Valve
Drainage Pump x 2
NO.2 PUMP
NO.3 PUMP
NO.4 PUMP
NO.1 PUMP
Switch Gear
Clear Water Reservoir
Flow
Flow Meter
Distribution Main NO.0
Distribution Main To GOLRA-1 ø 700 x 2
SCALE 1 : 200
THE ISLAMIC REPUBLIC OF PAKISTAN
CAPITAL DEVELOPMENT AUTHORITY
THE CONDUCTION OF WATER FROM KHANPUR TO ISLAMABAD/RAWALPINDI
PUPING STATION BASEMENT FLOOR PLAN
DATE
DWG. NO 26
JAPAN INTERNATIONAL COOPERATION AGENCY

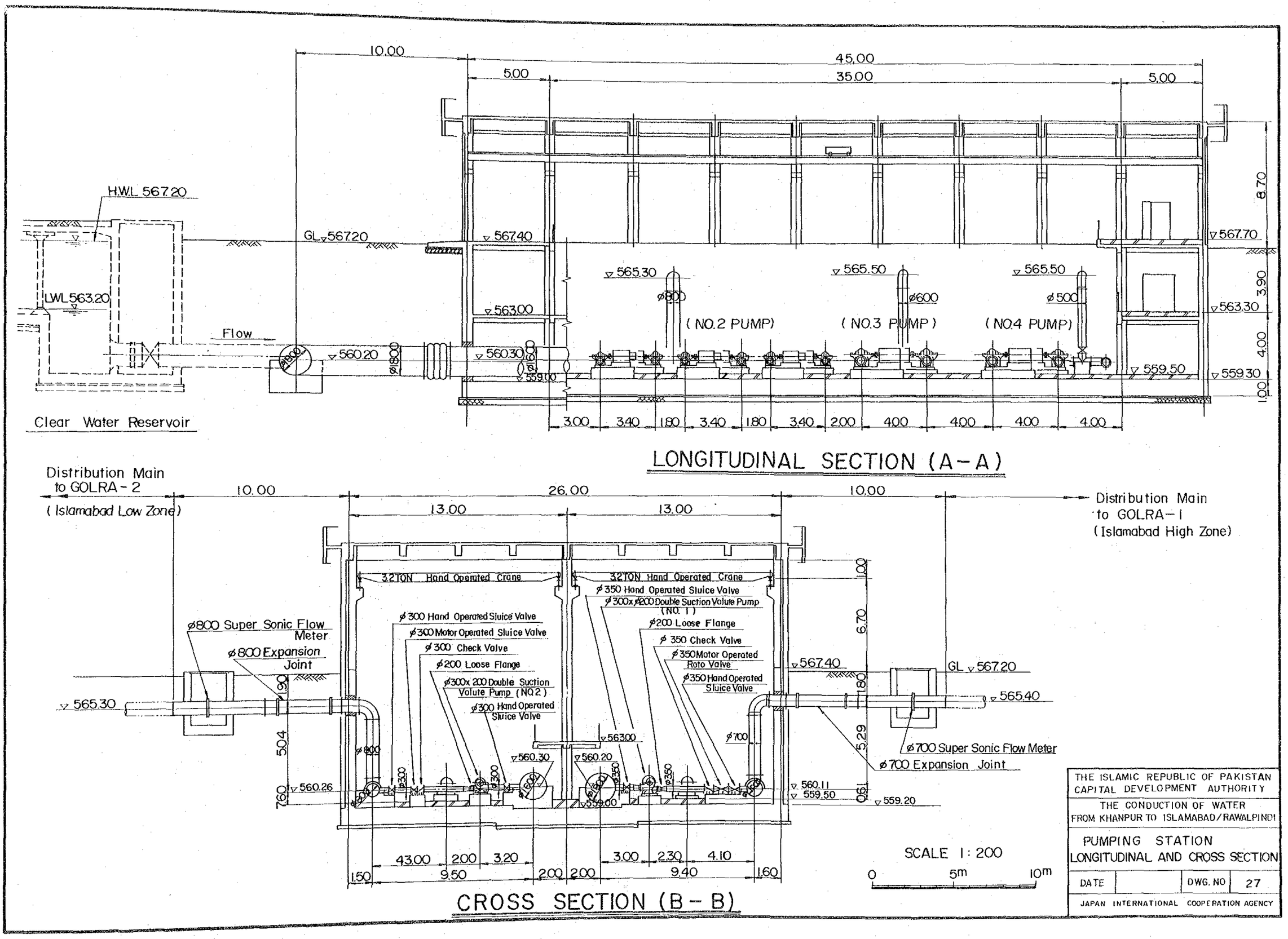
10.00
45.00
5.00
35.00
5.00
H.W.L 567.20
GL 567.20
567.40
567.70
565.30
565.50
565.50
LWL 563.20
563.00
563.30
Flow
ø800
ø600
ø500
(NO.2 PUMP)
(NO.3 PUMP)
(NO.4 PUMP)
560.20
560.30
559.00
559.50
559.30
Clear Water Reservoir
3.00
3.40
1.80
3.40
1.80
3.40
2.00
4.00
4.00
4.00
4.00
8.70
3.90
4.00
1.00
LONGITUDINAL SECTION (A-A)
Distribution Main
to GOLRA-2
(Islamabad Low Zone)
10.00
26.00
10.00
13.00
13.00
Distribution Main
to GOLRA-1
(Islamabad High Zone)
3.2TON Hand Operated Crane
3.2TON Hand Operated Crane
ø350 Hand Operated Sluice Valve
ø300x ø200 Double Suction Volute Pump (NO. 1)
ø300 Hand Operated Sluice Valve
ø300 Motor Operated Sluice Valve
ø300 Check Valve
ø200 Loose Flange
ø300x 200 Double Suction Volute Pump (NO.2)
ø300 Hand Operated Sluice Valve
ø200 Loose Flange
ø350 Check Valve
ø350 Motor Operated Roto Valve
ø350 Hand Operated Sluice Valve
ø800 Super Sonic Flow Meter
ø800 Expansion Joint
565.30
567.40
GL 567.20
565.40
ø700
ø700 Super Sonic Flow Meter
ø700 Expansion Joint
563.00
560.30
560.20
560.26
560.11
559.50
559.00
559.20
1.00
6.70
1.80
5.29
0.61
1.90
5.04
7.60
43.00
2.00
3.20
3.00
2.30
4.10
1.50
9.50
2.00
2.00
9.40
1.60
SCALE 1:200
0
5m
10m
CROSS SECTION (B-B)
THE ISLAMIC REPUBLIC OF PAKISTAN
CAPITAL DEVELOPMENT AUTHORITY
THE CONDUCTION OF WATER
FROM KHANPUR TO ISLAMABAD/RAWALPINDI
PUMPING STATION
LONGITUDINAL AND CROSS SECTION
DATE
DWG. NO
27
JAPAN INTERNATIONAL COOPERATION AGENCY

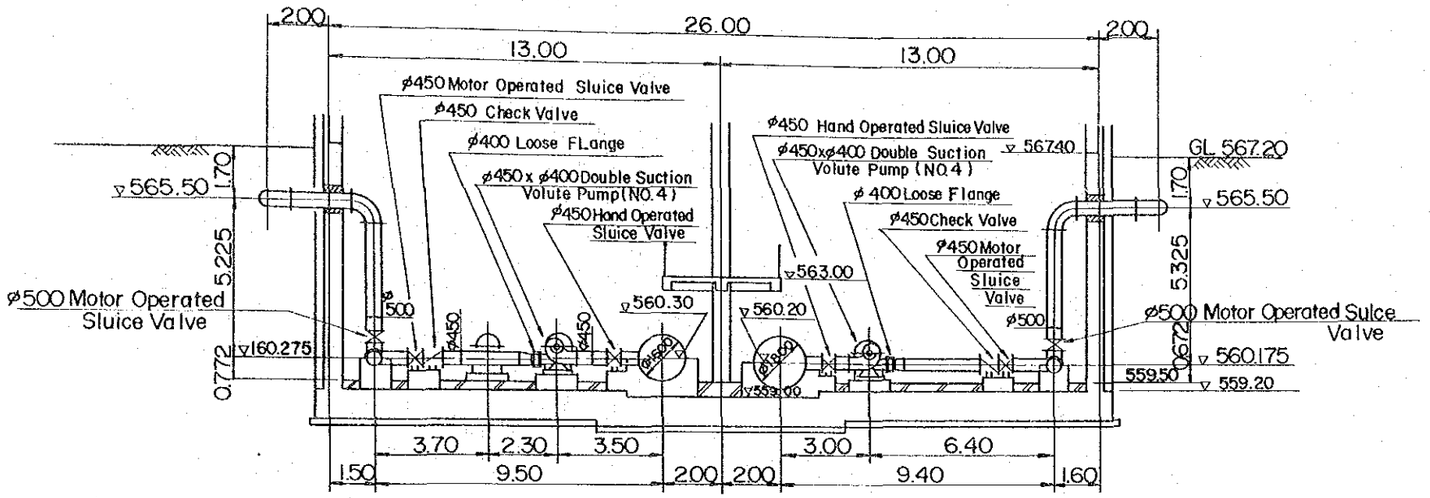

SECTION D-D

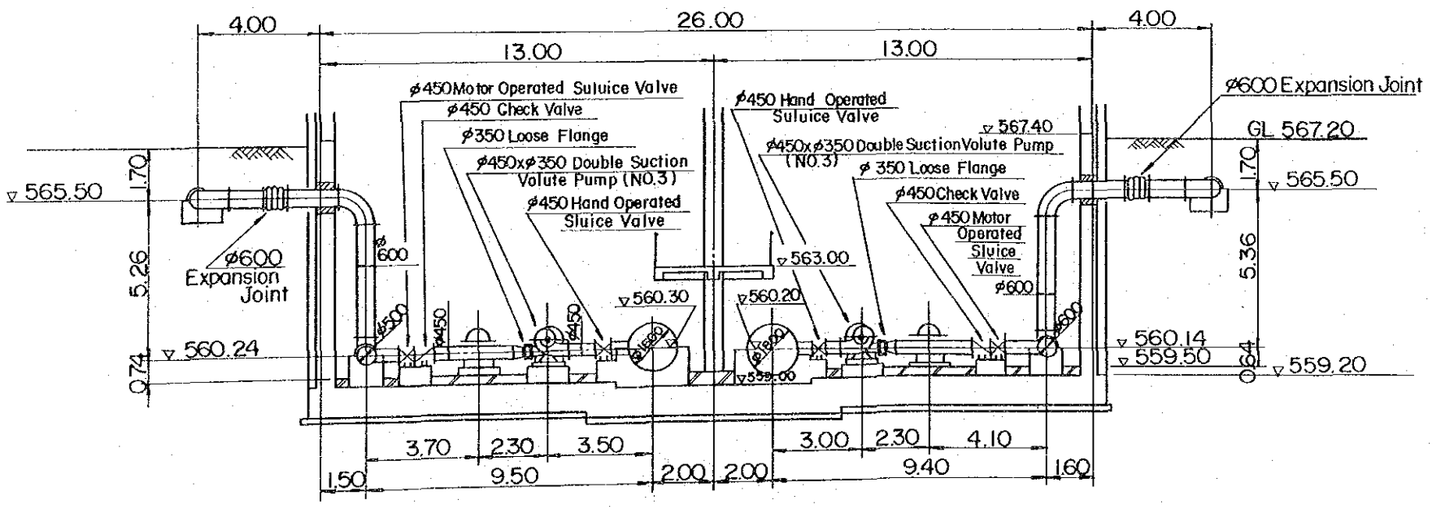

SECTION C-C

DIMENSION OF PUMPS

PUMP	NO. 1	NO. 2
	Islamabad High Zone	Islamabad Low Zone
TYPE	Horizontal Shaft Double Suction Volute Pump	←
BORE	ø300mm x ø200mm	ø 300 x ø200
CAPACITY	14.32 m³/min	9.22
TOTAL HEAD	117.5 m	68.0
REVOLUTION	1460 min⁻¹	1460
MOTOR OUTPUT	400KW (4P)	150 KW(4P)
UNITS	6	6

PUMP	NO. 3	NO. 4
	T.P Surface Wash	T.P Back Wash
TYPE	Horizontal Shaft Double Suction Volute Pump	←
BORE	ø450mm x ø350mm	ø 450 x ø400
CAPACITY	25.0 m³/min	23.3
TOTAL HEAD	20.0 m	15.0
REVOLUTION	990 min⁻¹	990
MOTOR OUTPUT	132KW(6P)	90KW(6P)
UNITS	4	3

SCALE 1 : 200

0 5m 10m

THE ISLAMIC REPUBLIC OF PAKISTAN
CAPITAL DEVELOPMENT AUTHORITY

THE CONDUCTION OF WATER
FROM KHANPUR TO ISLAMABAD/RAWALPINDI

PUMPING STATION
CROSS SECTION

DATE		DWG. NO	28

JAPAN INTERNATIONAL COOPERATION AGENCY

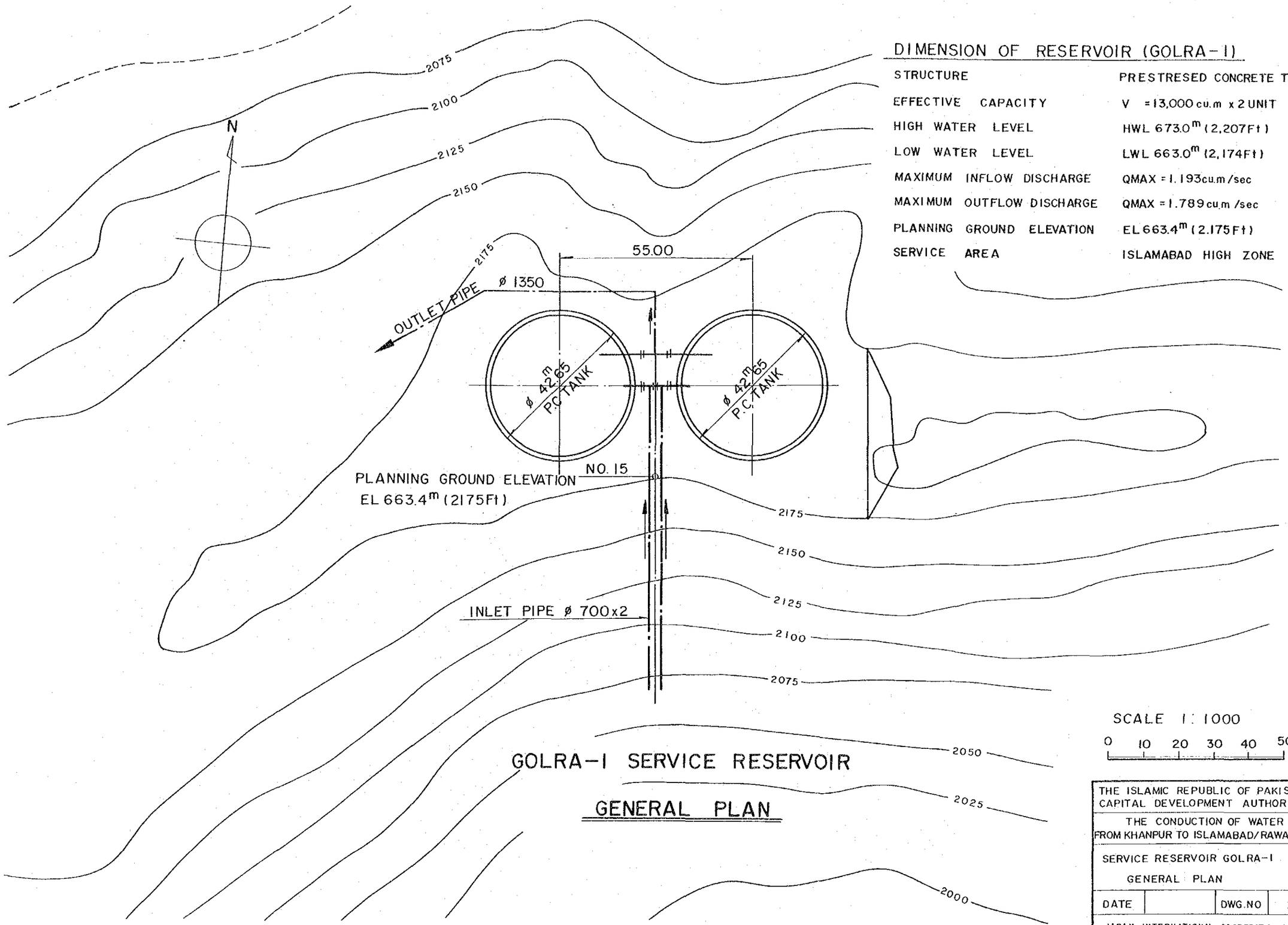

DIMENSION OF RESERVOIR (GOLRA-I)

STRUCTURE	PRESTRESED CONCRETE TANK
EFFECTIVE CAPACITY	V = 13,000 cu.m x 2 UNIT
HIGH WATER LEVEL	HWL 673.0m (2,207Ft)
LOW WATER LEVEL	LWL 663.0m (2,174Ft)
MAXIMUM INFLOW DISCHARGE	QMAX = 1.193 cu.m/sec
MAXIMUM OUTFLOW DISCHARGE	QMAX = 1.789 cu.m/sec
PLANNING GROUND ELEVATION	EL 663.4m (2,175Ft)
SERVICE AREA	ISLAMABAD HIGH ZONE

GOLRA-I SERVICE RESERVOIR

GENERAL PLAN

THE ISLAMIC REPUBLIC OF PAKISTAN CAPITAL DEVELOPMENT AUTHORITY			
THE CONDUCTION OF WATER FROM KHANPUR TO ISLAMABAD/RAWALPINDI			
SERVICE RESERVOIR GOLRA-I GENERAL PLAN			
DATE		DWG.NO	29
JAPAN INTERNATIONAL COOPERATION AGENCY			

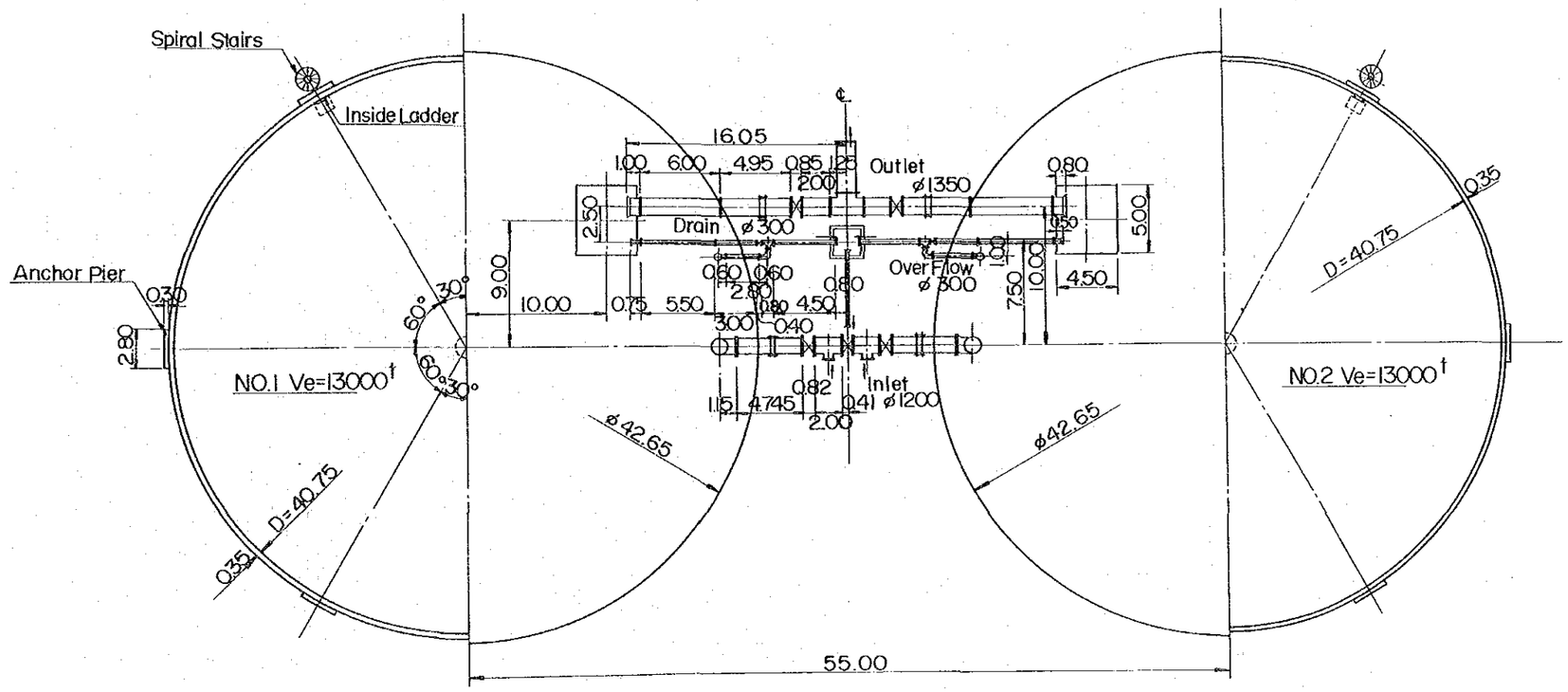

SECTION PIPE PLAN PIPE PLAN SECTION

PLAN

SCALE 1:400

0 10m 20m

THE ISLAMIC REPUBLIC OF PAKISTAN CAPITAL DEVELOPMENT AUTHORITY			
THE CONDUCTION OF WATER FROM KHANPUR TO ISLAMABAD/RAWALPINDI			
GOLRA-1 SERVICE RESERVOIR PLAN			
DATE		DWG. NO	30
JAPAN INTERNATIONAL COOPERATION AGENCY			