THE KINGDOM OF THAILAND
NATIONAL ENERGY ADMINISTRATION
MINISTRY OF SCIENCE, TECHNOLOGY AND ENERGY

NAM MAE YUAM HYDROELECTRIC DEVELOPMENT PROJECT FEASIBILITY REPORT

SUMMARY

MARCH, 1984

JAPAN INTERNATIONAL COOPERATION AGENCY

THE KINGDOM OF THAILAND

NATIONAL ENERGY ADMINISTRATION

MINISTRY OF SCIENCE, TECHNOLOGY AND ENERGY

NAM MAE YUAM HYDROELECTRIC DEVELOPMENT PROJECT FEASIBILITY REPORT

SUMMARY

MARCH, 1984

JAPAN INTERNATIONAL COOPERATION AGENCY

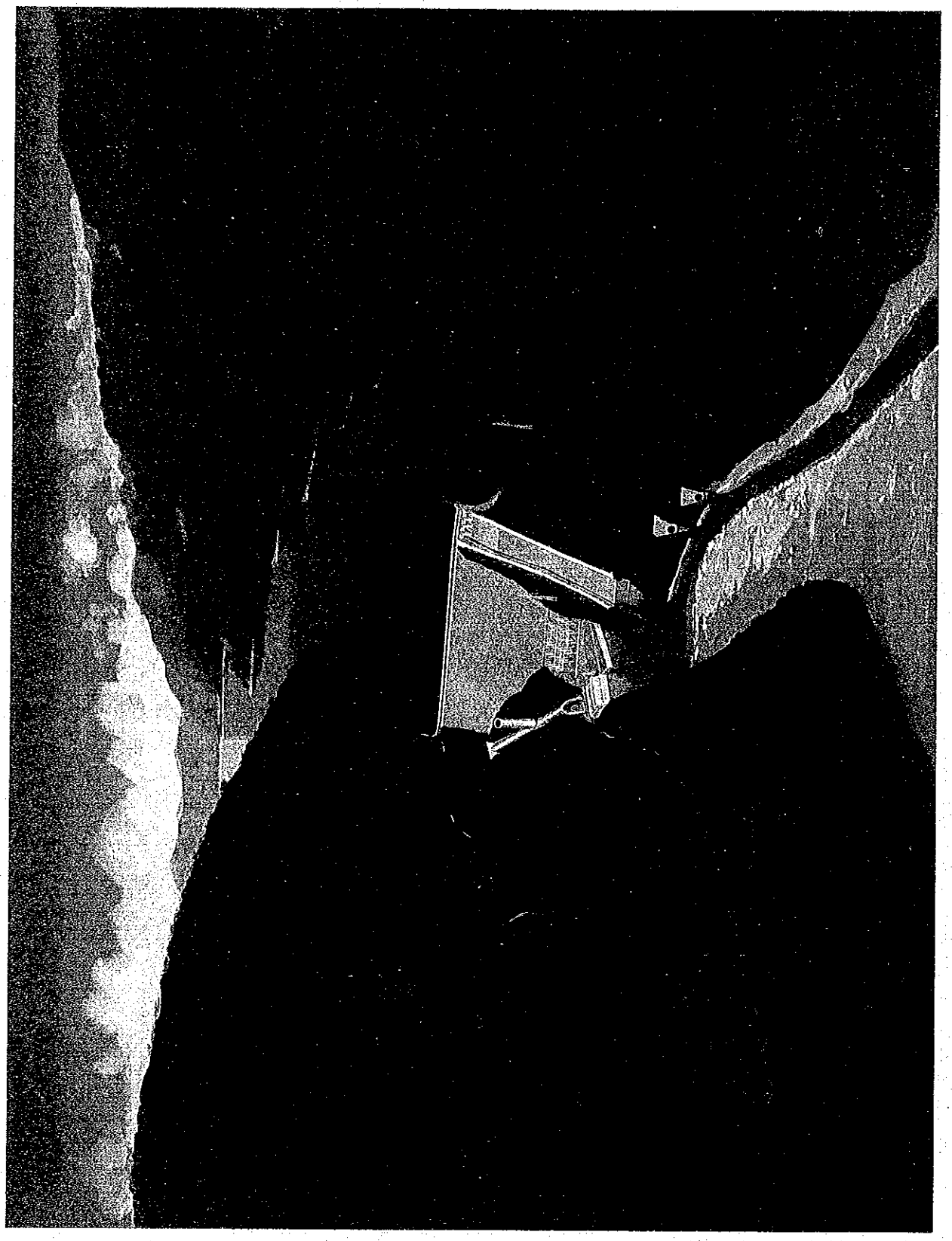

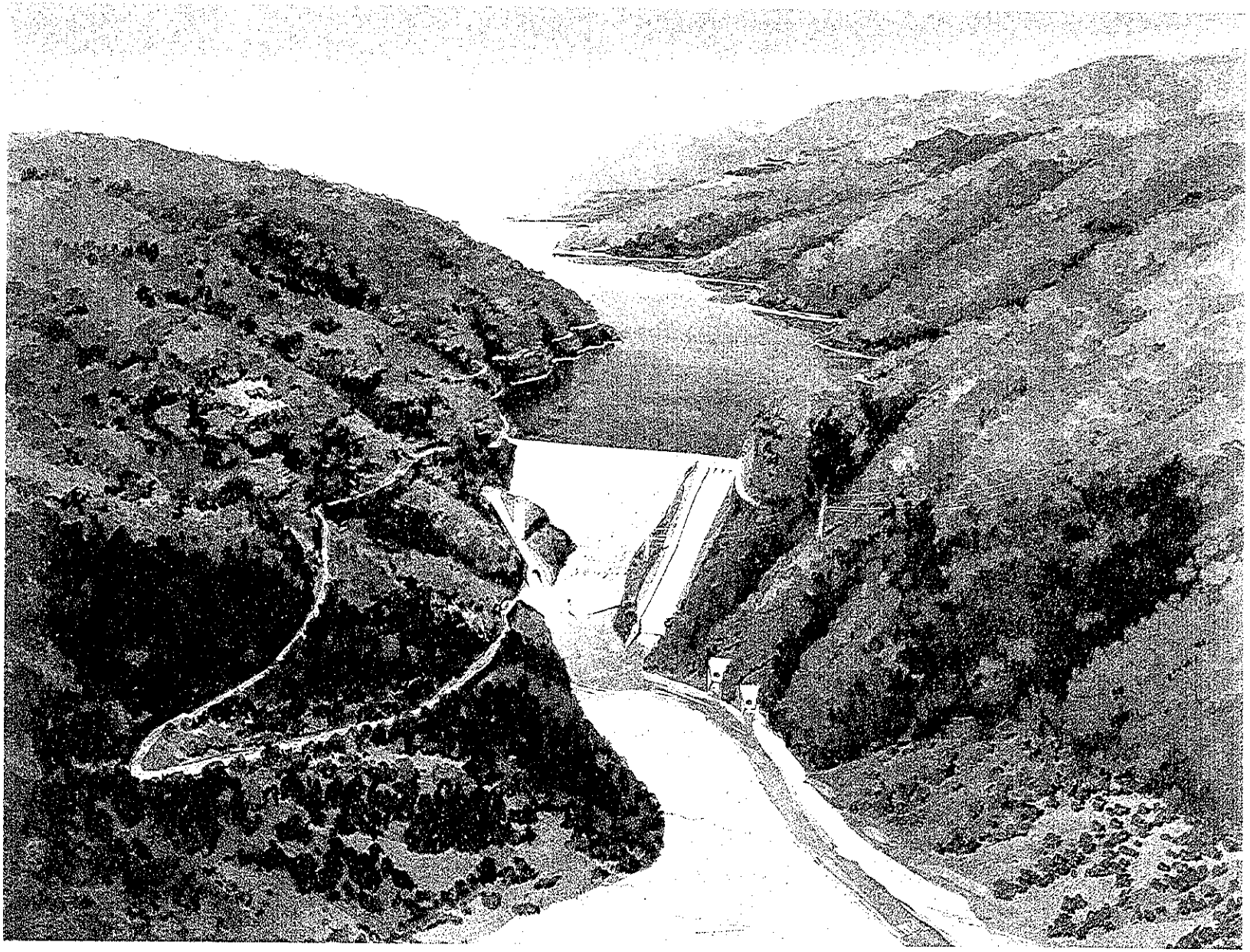

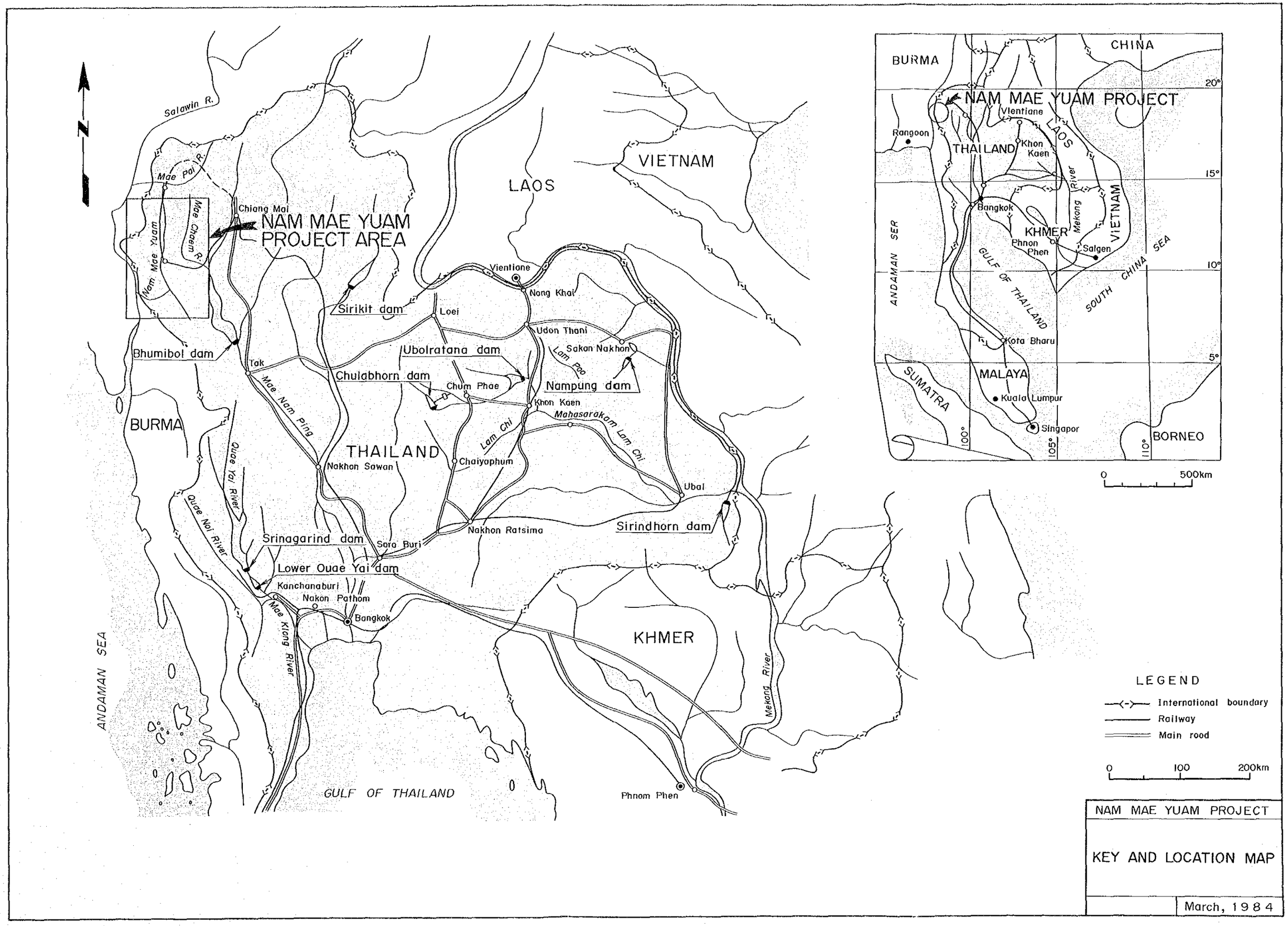

NAM MAE YUAM PROJECT

KEY AND LOCATION MAP

March, 1984

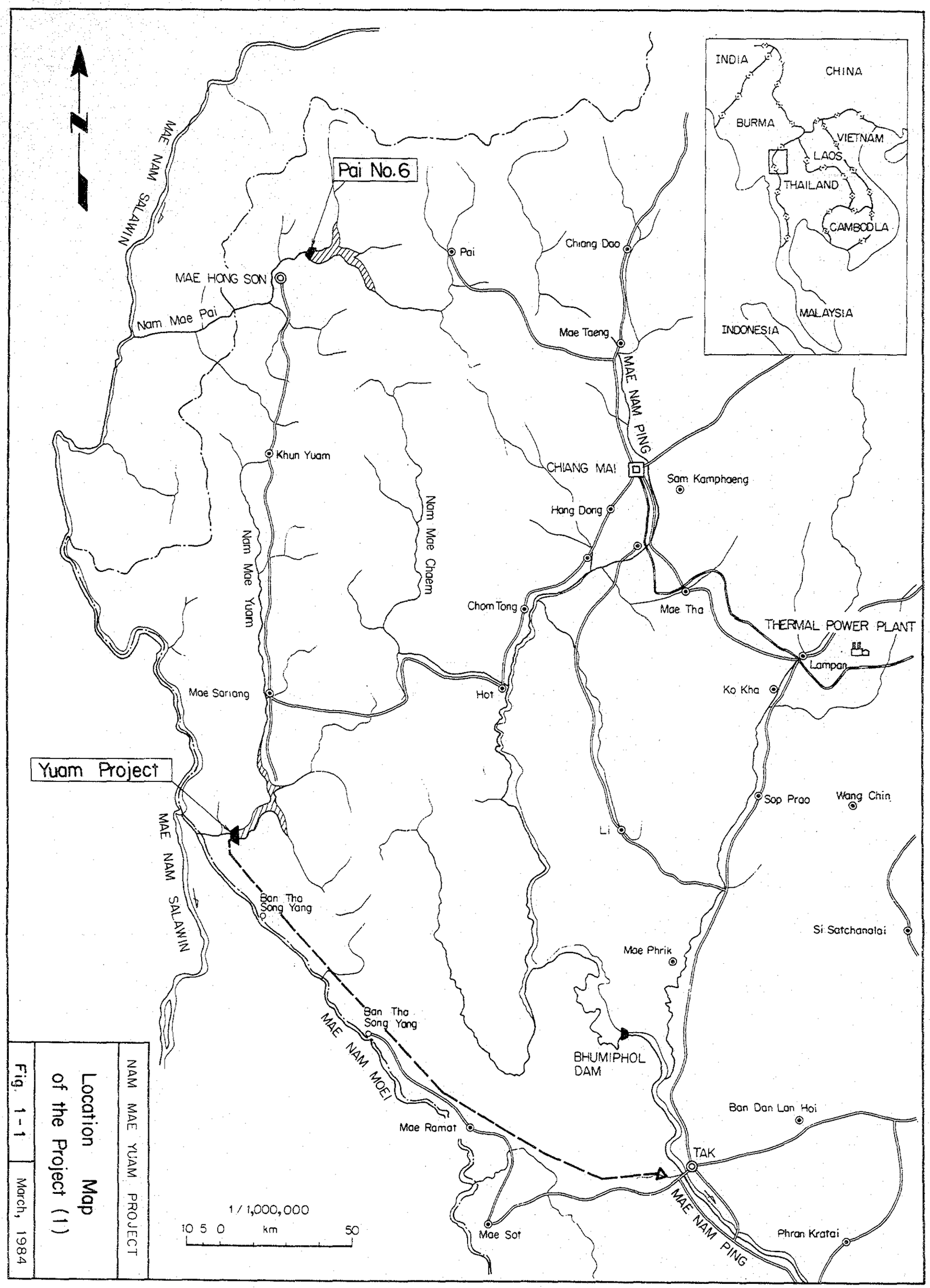

NAM MAE YUAM PROJECT

Location Map of the Project (1)

Fig. 1-1

March, 1984

General Description of Project

Type of Power of Generation	: Storage Type	
Catchment Area	: 5,920 km^2	
Annual Inflow	: 2,800 x $10^6 m^3$	
Reservoir	: Normal Heigh Water Level;	170m
	Total Storage Capacity;	444 x $10^6 m^3$
	Effective Storage Capacity;	261 x $10^6 m^3$
	Available Drawdown;	20m
Power Production	: Normal Effective Head;	87.30m
	Max. Turbine Discharge;	215m^3/sec.
	INSTALLED CAPACITY;	162MW
	ANNUAL ENERGY PRODUCTION;	565GWh
Dam	: Center Core Type Rockfill Dam	
	Height x Crest Length;	120m x 350m
	Volume;	4,650 x $10^3 m^3$
Water Way	: Headrace Tunnel Dia.x Length;	7.80m x 240m
	Penstock Dia.x Length x Line;	7.80m x 186m x 1
	Penstock Dia.x Length x Line;	5.50m-4.40m x 112m x 2
Spillway	: Design Flood;	6,200m^3/sec.
	Design Discharge;	4,770m^3/sec.
	Dissipator;	Ski-jump type
Turbine	: Type;	Vertical-shaft Francis
	Number of Units;	2
Generator	: Type;	Three-phase, A.C. Syncronous
Transmission	: Power Plant - Substation of Tak	
	Voltage x Distance;	230kv x 185km
Construction Cost	: General Facilities;	3977.8 x 10^6 B
	Transmission & Others;	1770.2 x 10^6 B
	Total Construction Cost;	5,748 x 10^6 B
Economic Analyses	: Cost of Energy;	1.24 B/kWh
	(at Primary Substation)	
	Benefit Cost Ration;	1.105
	Annual Surplus Benefit;	70 x 10^6 B
	I.R.R.;	11.4 %
	Discount Rate;	10 %

Reservoir Area and Storage Capacity Curve

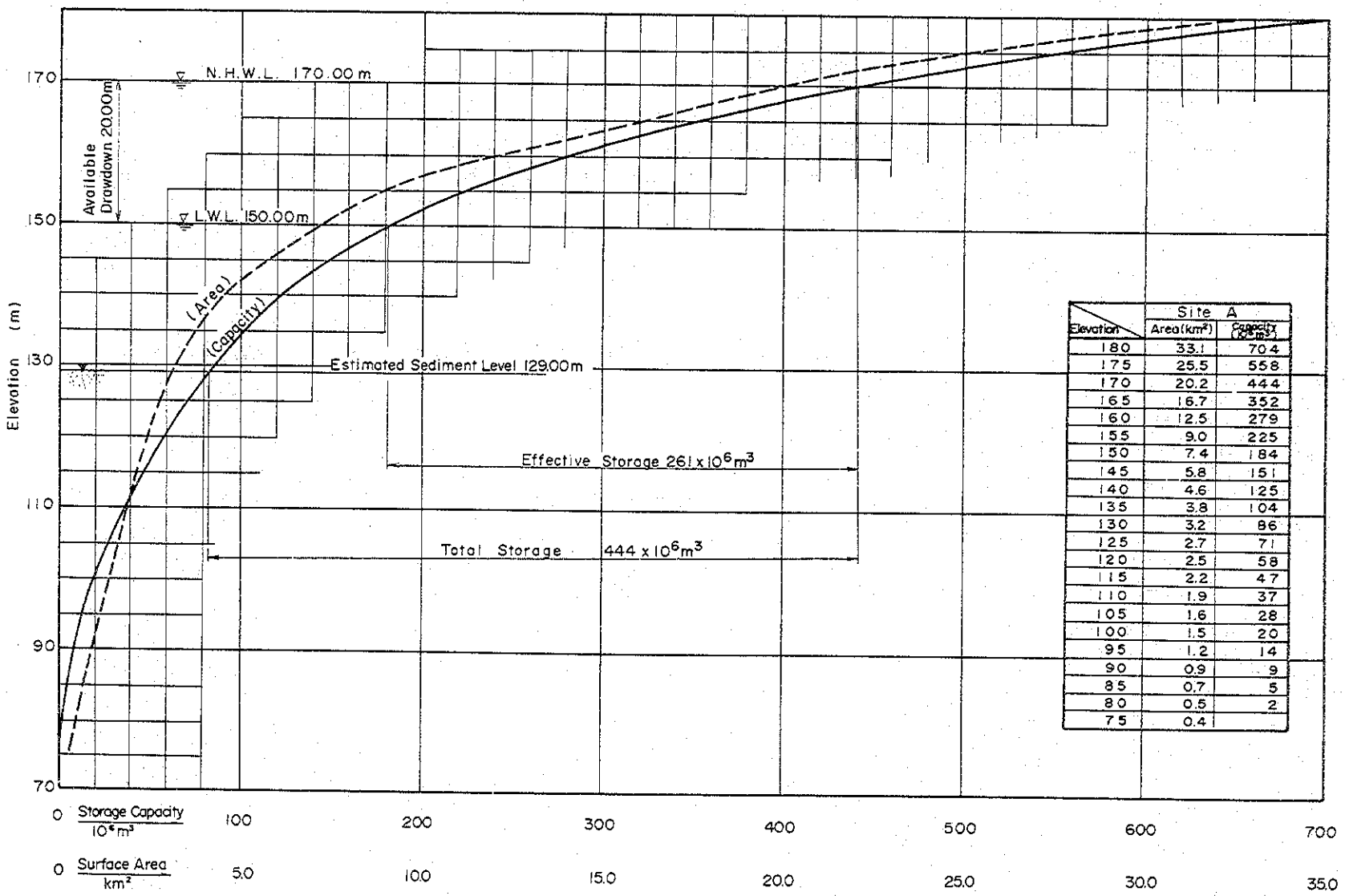

Elevation	Site A Area (km²)	Site A Capacity (10⁶m³)
180	33.1	704
175	25.5	558
170	20.2	444
165	16.7	352
160	12.5	279
155	9.0	225
150	7.4	184
145	5.8	151
140	4.6	125
135	3.8	104
130	3.2	86
125	2.7	71
120	2.5	58
115	2.2	47
110	1.9	37
105	1.6	28
100	1.5	20
95	1.2	14
90	0.9	9
85	0.7	5
80	0.5	2
75	0.4	

CONCLUSION AND RECEOMMENDATIONS

The economic growth in Thailand is so remarkable that power demand likely becomes 6,200MW, 36,900GWh by 1991, amounting to over double of the present and also seems to continue growing at an annual rate of over 6% after 1991.

On the other hand, assurance of oil substitute resources is very important for stable development of the Thai economy, and development of economical hydro power generation projects is, thus, considered significant.

The Nam Mae Yuam river is a tributary of the Salween river in the north-western part of Thailand, having catchment area as wide as 6,000 square kilometers where the rainfall is relatively heavy. The area concerned in this project is located 170km south-west of Chiang Mai, near the Burmese border.

It is concluded that the project is optimum in storage type with installed capacity 162MW and anuual generated energy 565GWh. The generated power to be transmitted to Tak, 185km away, on a 230kV power line is suitable to meet the demand in Bangkok area.

The estimated construction expenditure is 5,748 x 10^6 baht, project economy being fully assured. On technical matters too, there are no specially hard problems. It is desirable that the project will be implemented as early as possible in 1990's.

The geology around structures including the dam is Mesozoic shale, which is solid and favorable for construction, bearing no problems. In the reservoir area, calcarious rocks are distributed to some extent, but there is almost no fear of water leakage, judging from the result of investigation widely performed in the area paying much attention to the watertightness of the area. It is noted, however, that treatment of calcarious rocks in the left bank right upstream of the dam should be careful, for which, in this study, watertightening treatment has been considered to some extent, thus the necessary cost was involved in the total cost. Detail investigation thereof has to be pursued as soon as possible by the time of definite design.

As a result of sampling and testing, the core material satisfactory in quality could be found in general around the area. However, it would be hard to collect full amount thereof at the tested area only. Therefore it is necessary to perform further investigation taking close area also into account. Use of incidental materials obtained in collecting rock materials is very appropriate with piling and mexing. Thus, investigation on rock materials in quarry sites, which is also needed in preparation of quarrying schedule, is desired to be proceeded as early as possible.

It is extremely important for project development and should be pursued as soon as possible to investigate the present state of environmental aspect of the area including resettlement of houses to be inundated by the reservoir, and upon considering the effect, necessary measures must be taken.

Technical investigation works necessary for further definite study are as shown below.

(Geology)

To pursue a further detailed designing for Damsite A and main structure sites, the additional geological survey shown in Table 2-2 and Fig. 2-4 is considered necessary. The number of additional investigation works is as follows:

Drillings	8 holes	800 m

(Construction Material)

Based on results of surveys and tests conducted so far, the following investigations are conceived necessary for implementing further detailed design:

1) Impervious core materials

Since the rough figure of the presently-estimated available amount does not likely meet the whole quantity of impervious core materials, enlargement of investigation areas is required. The additional investigation is supposed to be impremented in borrow areas A and B surveyed this time and in borrow area D (located about 2.3km downstream of the damsite, on the left bank of the Huai Mae Lama Luang river, the branch of the Nam Nae Yuam river) which has been newly selected through the field investigation, and test pits are planned in these areas, which are located as indicated in Figs. 4-1 and 4-2. The sampling quantity is as follows:

Investigation Area	Digging Depth	Pit Number	Digging Depth in Total
Area A	5m	2	10m
Area B	5m	7	35m
Area D	5m	12	60m

2) Rock and filter materials

As for the rock and filter materials, no tests have been conducted so far. Investigations necessary for further study are considered as follows:

First, test boring should be performed in the area to be investigated and the boring core obtained should be examined. When they will reveal the area good for quarry site, test adits should be provided so as to collect samples and to conduct various tests.

The number of test boring and test adit is as follows:

Test borings	;	eight holes (The location is shown in Fig. 4-1.)
Test adits	;	four adits (The datail is determined from the results of test borings.)

3) Concrete aggregates

(Construction Planning)

1) Topographical mapping

For the layout of roads for construction, a topographical map in a scale of 1:2000 or of 1:5000 is necessary. Preferably, the mapping is to be made along the Route 2 by interpretation of aerial photograph.

2) Geological investigation

Along the planned route, geological investigation by reconnaissance is necessary. Also, investigation, preferably by boring, is necessary where construction of long spaned bridges are planned.

At last, it had been required in this feasibility study that this Yuam project should be compared with Pai No.6 or Chaem No.5 project. These two projects are still in a master plan stage and the investigation on environmental impact which is significant factor in developments has not yet been performed. Therefore, proper comparison in the priority would be difficult. But, comparing them simply in the technical and economic terms, Pai No.6 project is judged superior to Yuam project, and is concieved favorable to develop the Pai No.6 project first and then, with time lag of two or three years, to develop the Yuam project. On the other hand, Chaem No.5 project is considered rather difficult to be developed, judging from the economy of near future.

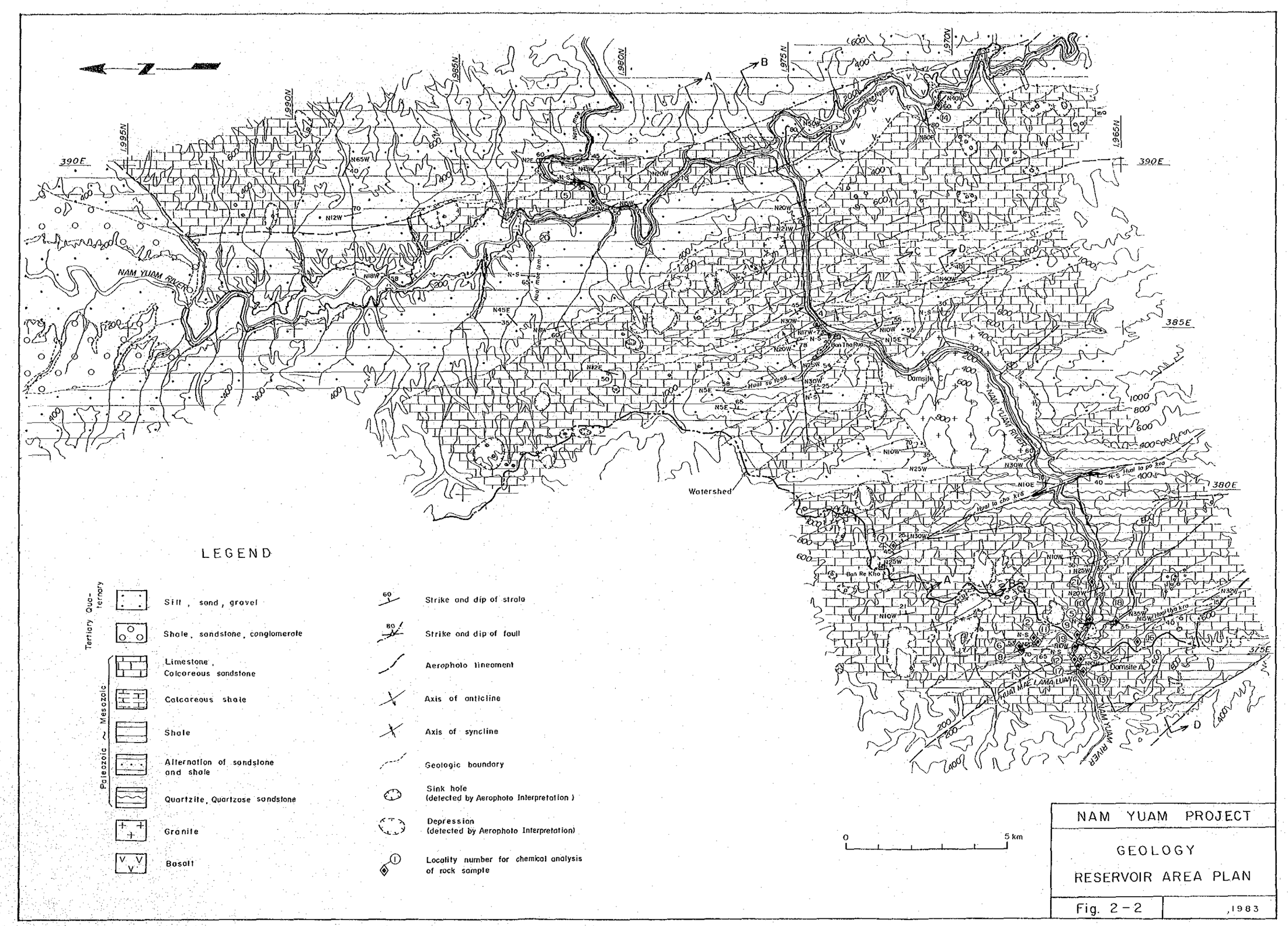

NAM YUAM PROJECT

GEOLOGY

RESERVOIR AREA PLAN

Fig. 2-2 | 1983

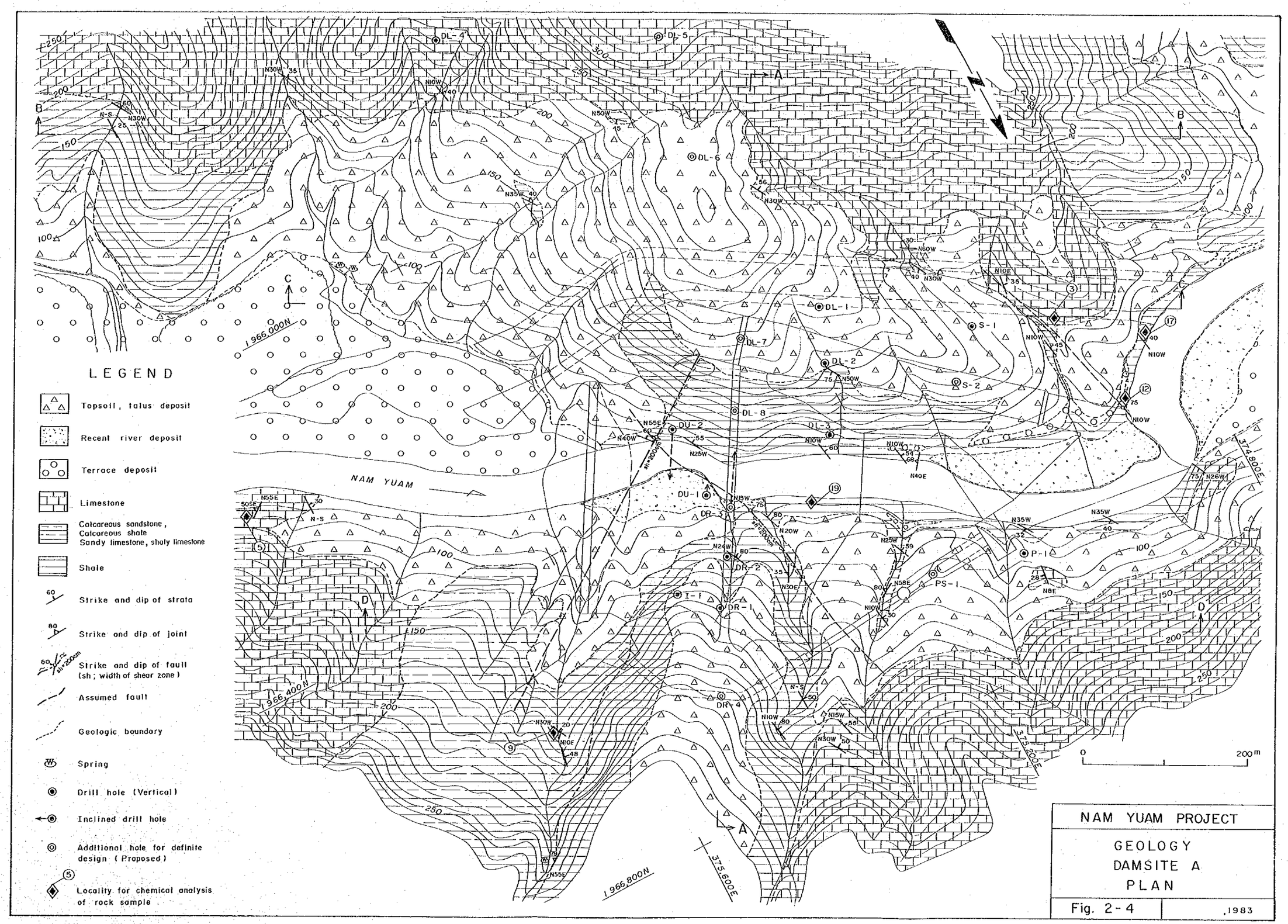

NAM YUAM PROJECT

GEOLOGY
DAMSITE A
PLAN

Fig. 2-4 | 1983

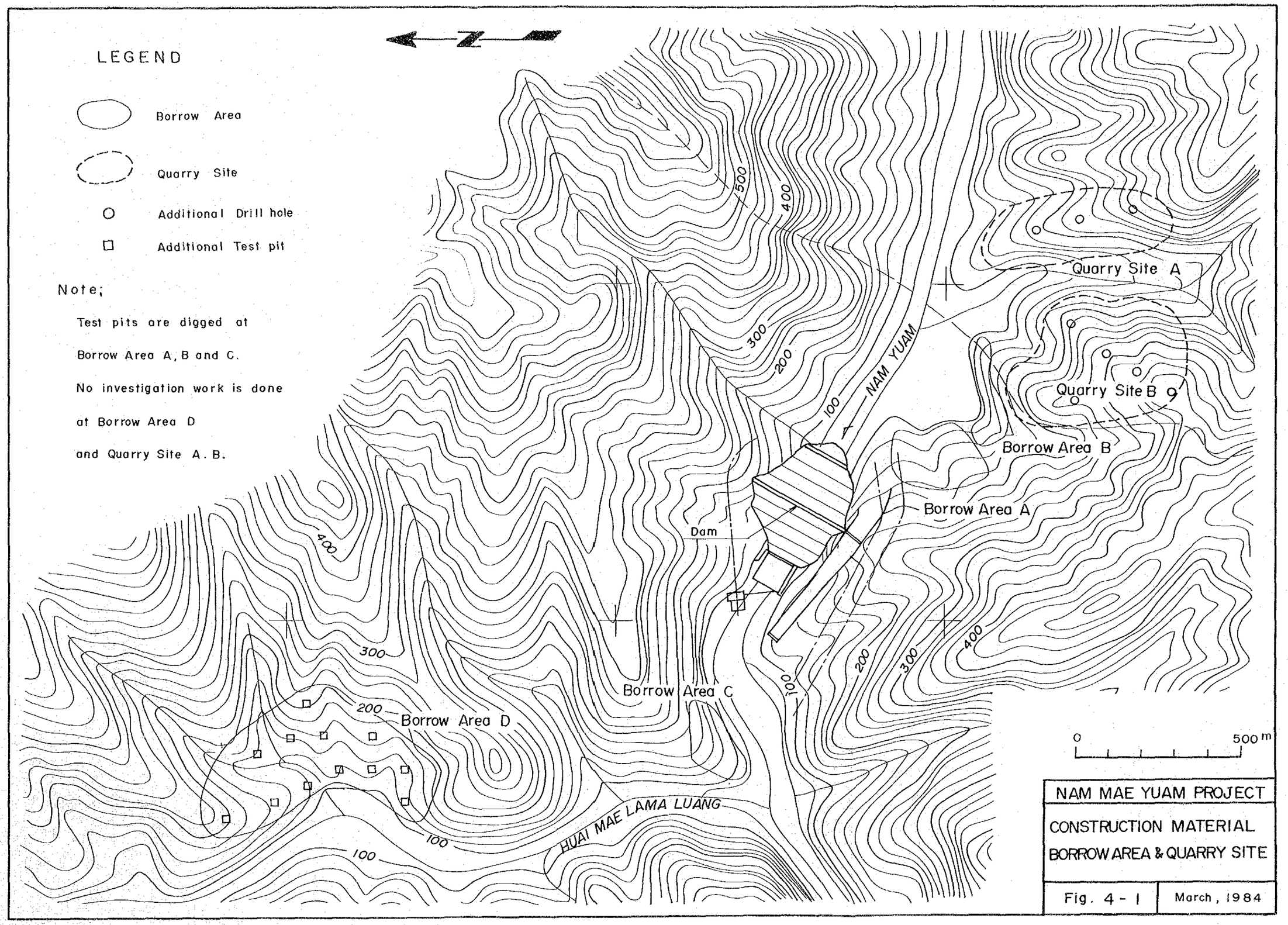
LEGEND
Borrow Area
Quarry Site
Additional Drill hole
Additional Test pit
Note;
Test pits are digged at
Borrow Area A, B and C.
No investigation work is done
at Borrow Area D
and Quarry Site A. B.
N
500
400
300
200
100
NAM YUAM
Quarry Site A
Quarry Site B
Borrow Area B
Borrow Area A
Dam
Borrow Area C
Borrow Area D
HUAI MAE LAMA LUANG
0
500 m
NAM MAE YUAM PROJECT
CONSTRUCTION MATERIAL
BORROW AREA & QUARRY SITE
Fig. 4 - 1
March, 1984

CHAPTER 5. PLANNING OF DEVELOPMENT

5.3 Choice of Development Plan

Damsites A and C can be considered as a planned site along the main course of the Yuam river. The optimum plan, for A, C or these combination, can be determined through study of dam height, effective storage, output level, generating type and development time. Furthermore, comparison with Pai No.6 and Chaem No.5 Plans is required in terms of precedence.

The optimum plan should be based on the principle to minimize the total cost of the system in forecasting the future demand and supply. This plan is, in other words, such that the saving amount due to the said plan, i.e., the resulting amount in subtracting the cost of the said plan from the cost of alternative supply plan becomes the largest.

This study should cover over the life of facilities at the site in question and also should be adaptable for the estimated demand and supply volume. However, since all possible reviewing on all thinkable comparison schemes makes the calculation complex in vain, some are disregarded experientially to the extent that no large error arises, and its accuracy is to be increased stage by stage.

A thermal power plant is reasonably the alternative power supply source, of which the cost is due saved by an electric power project in question, in such nations as Thailand where a large part of power system relies on thermal power plants. Of course, there are various kinds of thermal power plants, but the one with imported coal was employed here. However, with this supply source alone, load fluctuation such as peaking is not met, so that it is required that a gas turbine thermal power sustains about 14% of the peak demand. General Description of the employed gas turbine and imported-coal thermal power plant are given in Table 5-2.

Fig. 9-2 EGAT Power Development Plan

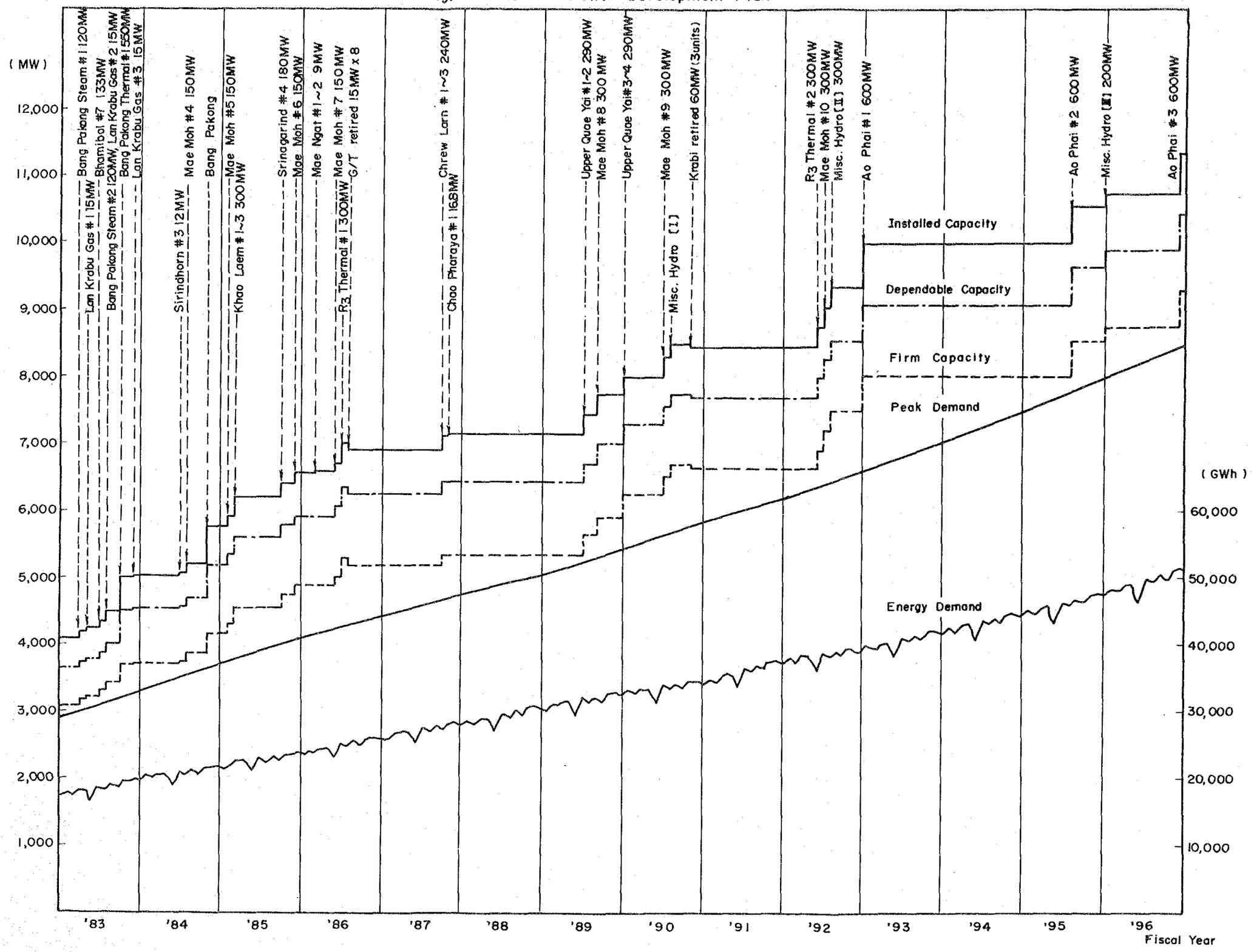

Fig. 9-3 Reserved Capacity Ratio in Peak Balance

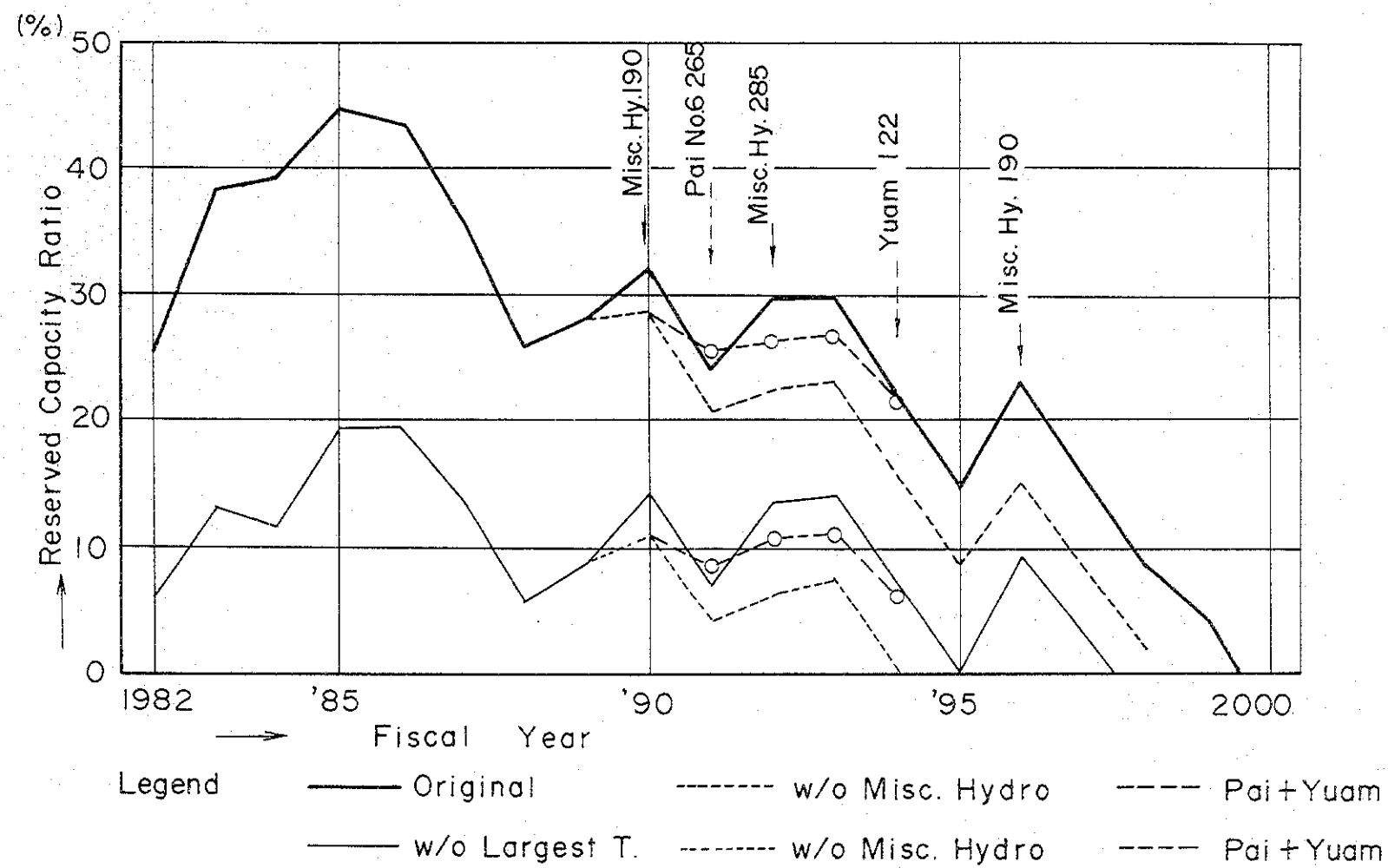

Fig. 5-5 Reservoir Area and Storage Capacity Curve

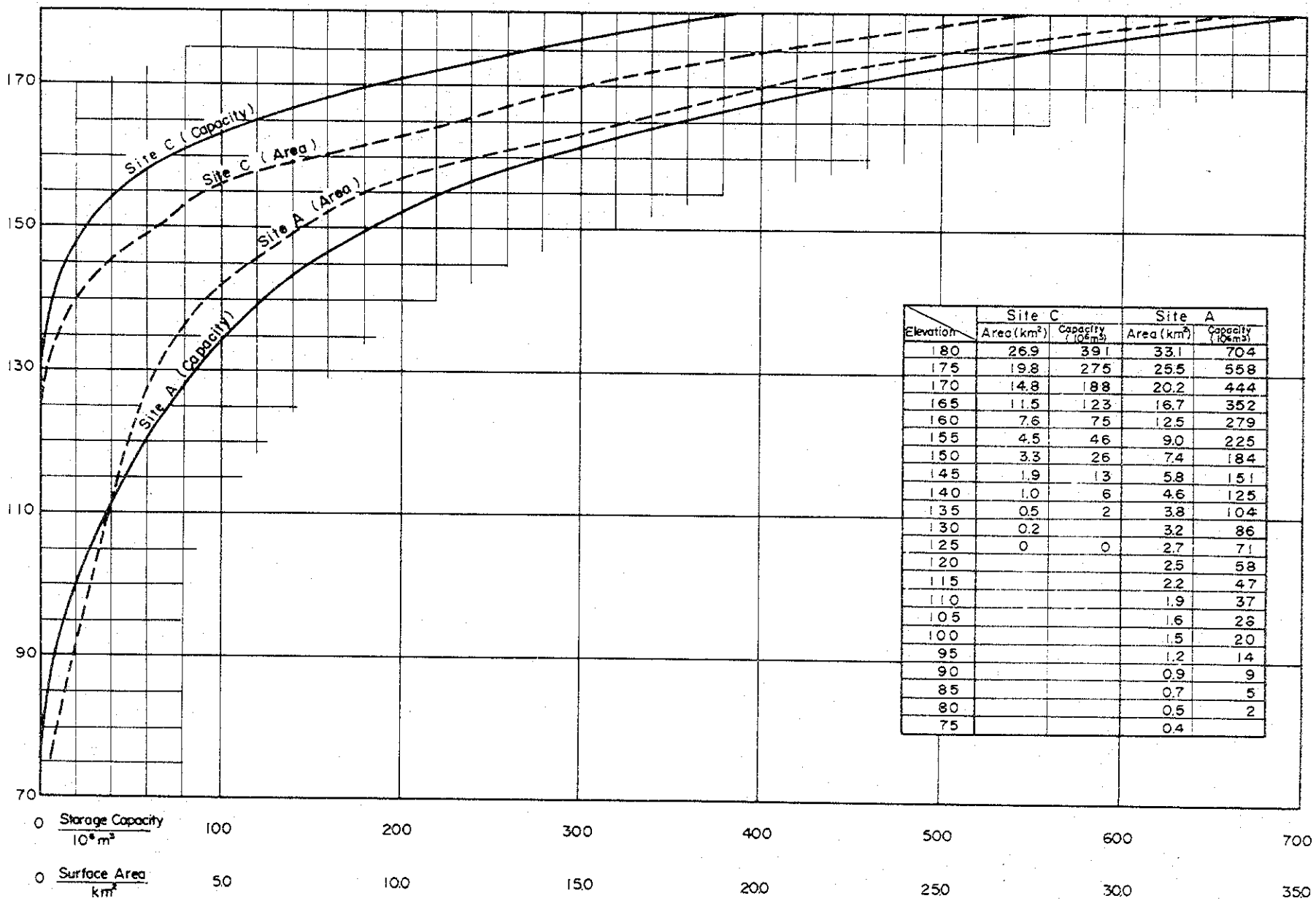

Elevation	Site C Area (km^2)	Site C Capacity ($10^6 m^3$)	Site A Area (km^2)	Site A Capacity ($10^6 m^3$)
180	26.9	391	33.1	704
175	19.8	275	25.5	558
170	14.8	188	20.2	444
165	11.5	123	16.7	352
160	7.6	75	12.5	279
155	4.5	46	9.0	225
150	3.3	26	7.4	184
145	1.9	13	5.8	151
140	1.0	6	4.6	125
135	0.5	2	3.8	104
130	0.2		3.2	86
125	0	0	2.7	71
120			2.5	58
115			2.2	47
110			1.9	37
105			1.6	28
100			1.5	20
95			1.2	14
90			0.9	9
85			0.7	5
80			0.5	2
75			0.4	

Fig. 5-1 Mass Curve of Runoff in Nam Mae Yuam at Ban Tha Rua G.S.

Ve = 261 x 10^6 m^3

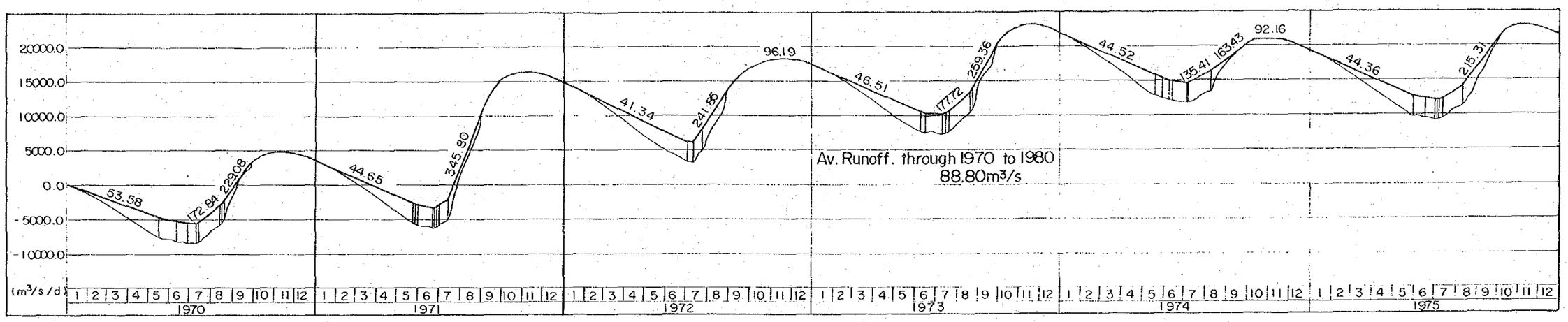

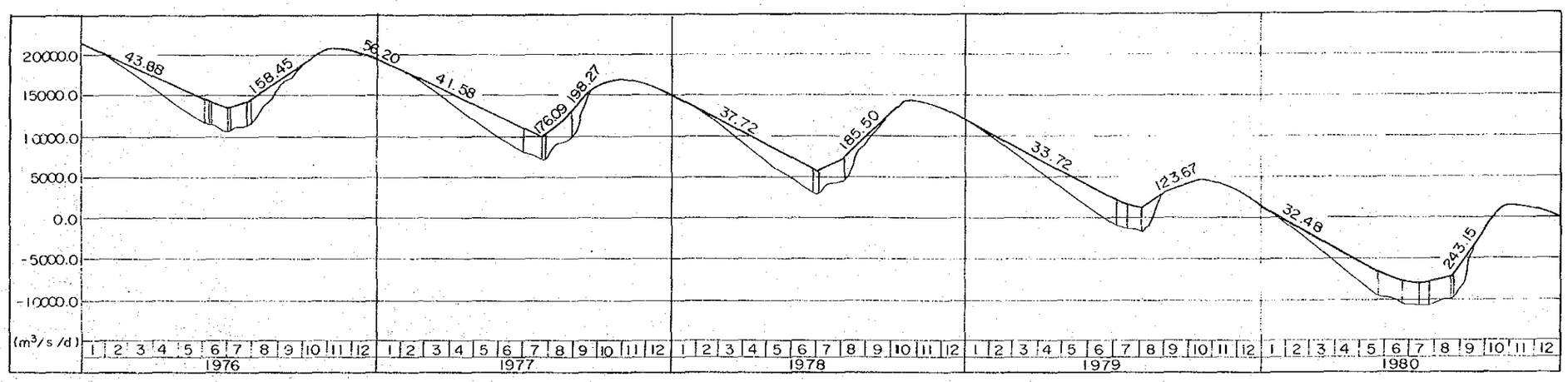

Table 5-1 Comparison of Project Features between Previous and Presently Proposed Schemes

	Unit	Previeus (1976)	Presently Proposed
H.W.L	m	170	170
Total Storage Capacity	$10^6 m^3$	450	444
Avilable Drowdown	m	30	20
Effect. Storage Capacity	$10^6 m^3$	375	261
Max. Discharge	m^3/s	160	215
Normal Effect. Head	m	88	87.3
Installed Capacity	MW	120	162
Annual Energy	GWh	578	565

Table 5-3 Cased examined in the Study

	Damsite / N.H.W.L (m)	A					C			
		175	170	165	155	119	180	175	170	155
Reservoir Type	($10^6 m^3$)									
	Eff. Storage 319	○	○				○			
	- ditto - 290	○	○	○			○			
	- ditto - 261	○	○	○			○			
	- ditto - 232	○	○	○			○	○		
Pondage Type	(m^3/s)									
	Max. Disc. 88			○	○			○	○	○
	- ditto - 106			○	○			○	○	○
	- ditto - 123			○	○			○	○	○
	- ditto - 140			○		*○		○	○	

Note: "*" indicates combination of damsite A, N.H.W.L. 119 m, and damsite C

Table 5-2 Benefit and Cost Rate for Studying Optimum Scale of Development

Interest Rate: 10%
1982 Price level

			Gas Turbine	Coal-fired Thermal
Ther-mal	Construction Cost	฿/kW	6,200	19,300
	Fuel Price at Plant	(%)	8.17 (B/l)	70 (US$/t)
	Annual Cost Rate	(%)	14.0	14.0
	Station Service Power Use	(%)	6.0	6.0
	Forced Outage Rate	(%)	4.0	4.0
	Overhaul Rate	(%)	12.0	-
	Unit kW benefit	(฿/kW)	1,100	3,000
	Unit kWh benefit	(฿/kWh)	3.21	0.68
Hydro	Annual Cost Rate of Hydro	(%)	11.6	
	Annual Cost Rate of Transmission Line	(%)	11.7	
	Annual Plant Factor of Hydro	(%)	97.0	
	Transmission line Loss Rate	(%)	4.8	

Fig. 5 - 4 Longitudinal Section of Yuam River

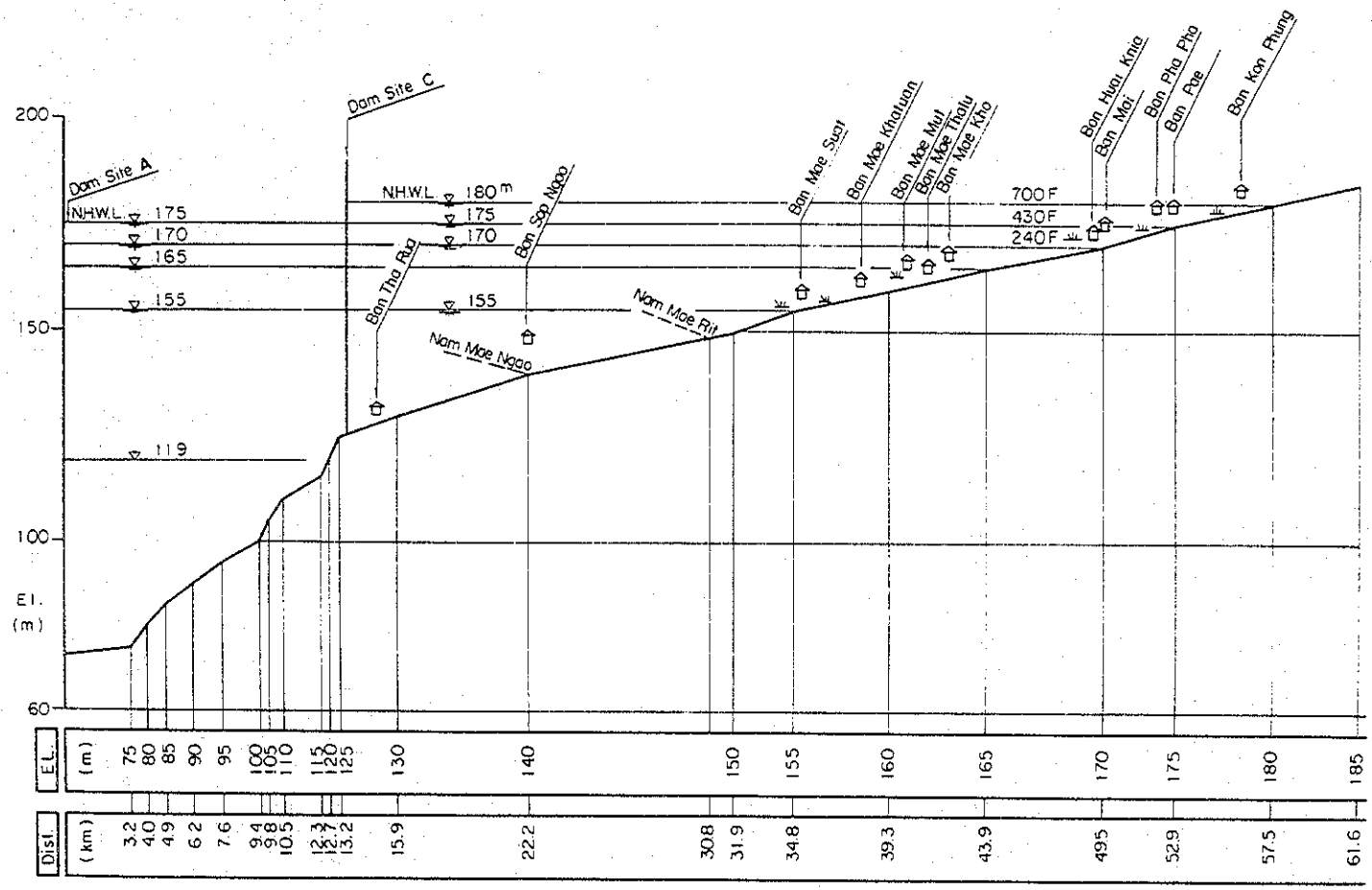

Fig. 5-7 B-C. Unit Energy Cost to Annual Cost

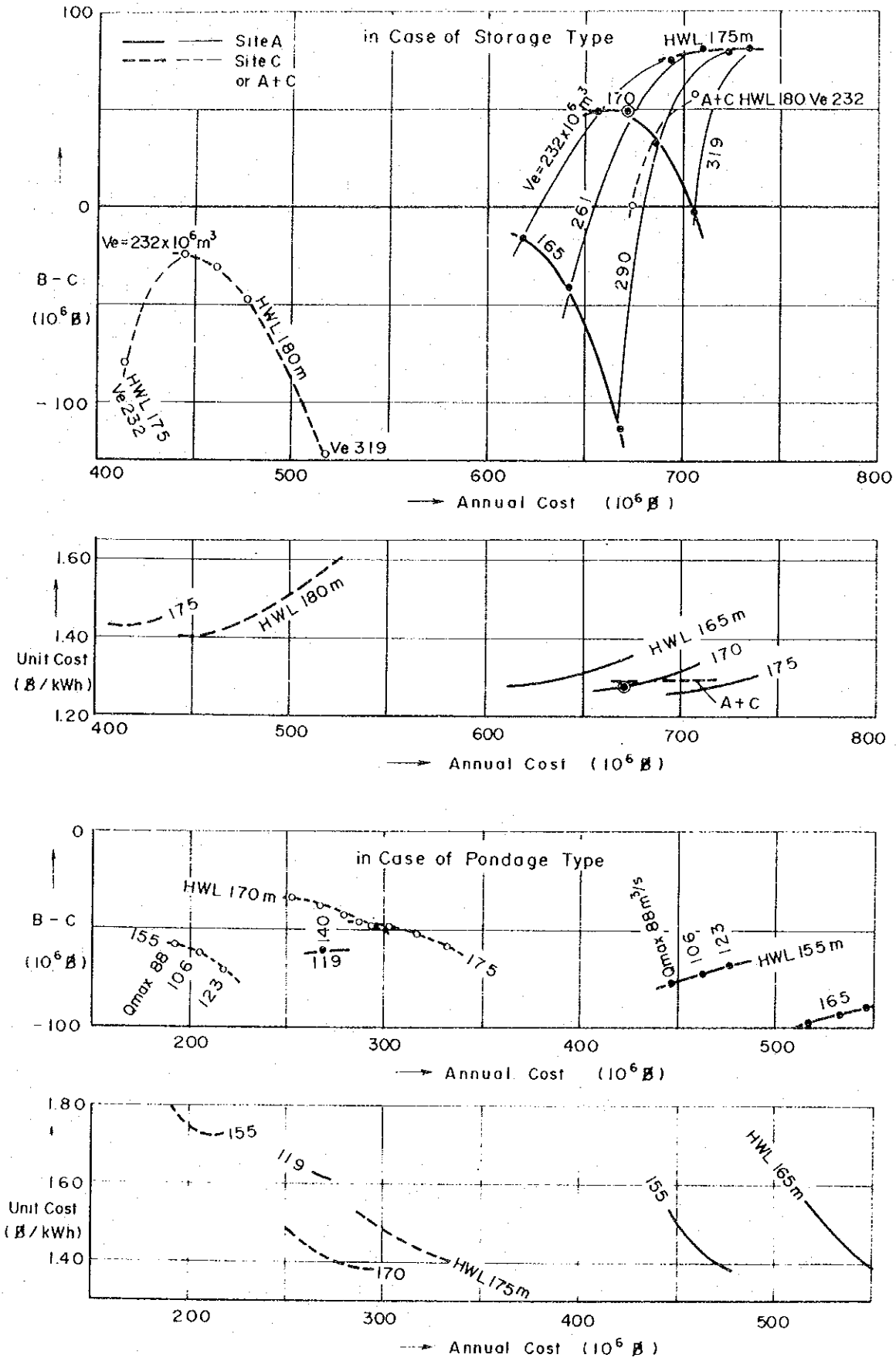

Table 5-6 Comparison on Capacities of the Project

	Site A, H.W.L. 170 m, Effective Storage 261 x $10^6 m^3$			
	MW	162	137	103
	m^3/s	215	182	137
Dependable Capacity	MW	128	107	80
Equivalent Peak Duration Time	hr	5.04	6.0	8.0
Annual Energy	GWh	565	541	483
Construction Cost	10^6B	5,787	5,492	5,160
Annual Cost	10^6B	672	638	600
Unit Price	B/kWh	1.29	1.27	1.32
Discount Rate 10%, Not considered implementation time. Considered pattern of demand only and not considered magnitude thereof.				
Annually Equalized Surplus Benefit	10^6B/Y	44	8	-6
Benefit Cost Ratio		1.07	1.01	0.90
Discount Rate 10%, Demand Growth Rate 6%/Y, Implementation Time 1991 Yr.				
Annually Equalized Surplus Benefit	10^6B/Y	40	10	-59
Benefit Cost Ratio		1.06	1.02	0.90
Discount Rate 10%, Demand Growth Rate 3%/Y, Implementation Time 1991Yr.				
Annually Equalized Surplus Benefit	10^6B/Y	31	4	-60
Benefit Cost Ratio		1.05	1.01	0.90

Fig. 3-1 Observatory and Gaging Stations with the Covering Area

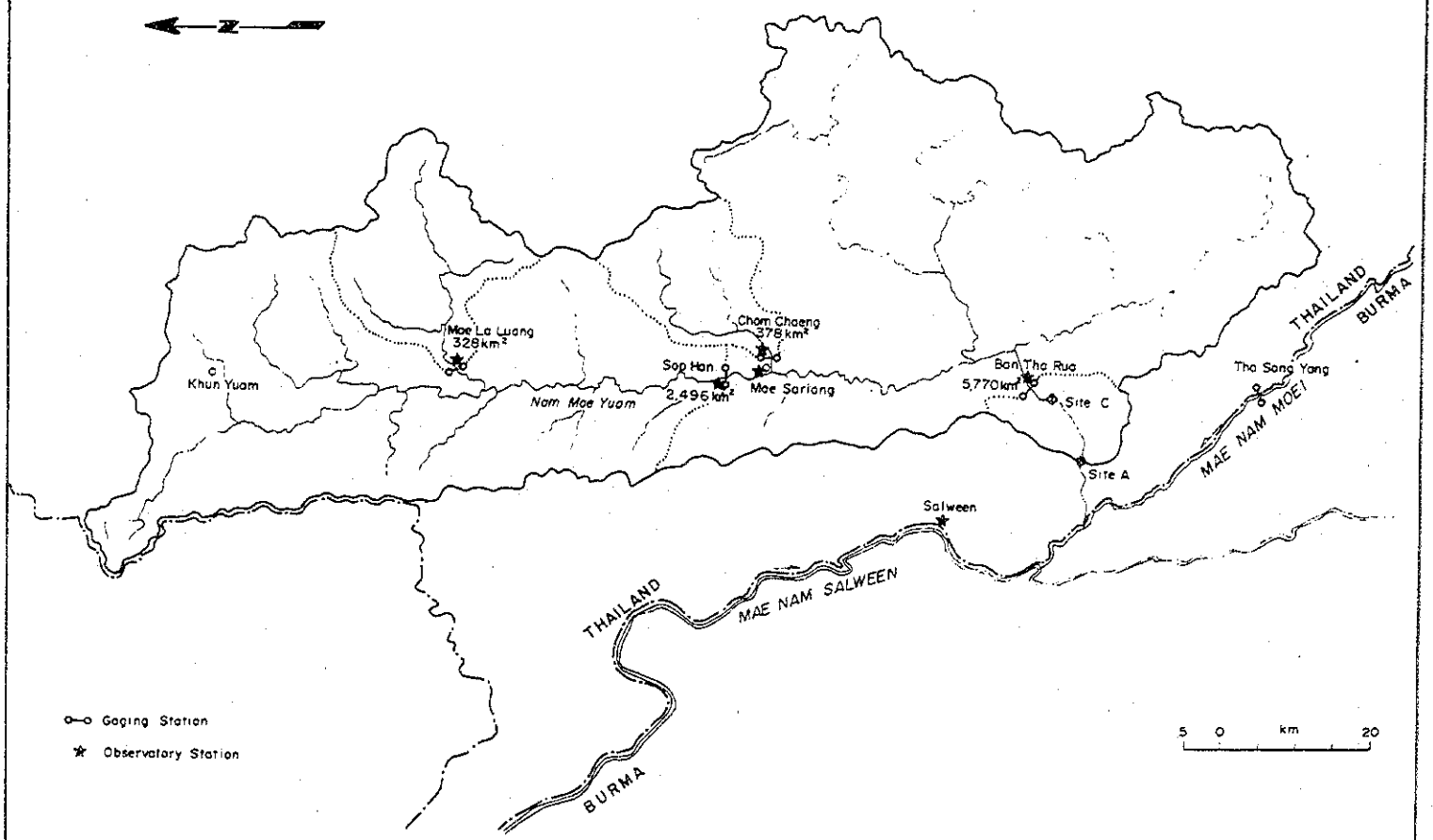

Table 5 - 7 Monthly Inflow

(Unit : m³/s)

Month / Year	Jan.	Feb.	Mar.	Apr.	May	Jun.	Jul.	Aug.	Sep.	Oct.	Nov.	Dec.	Annual
70	48.9	35.2	25.6	25.1	50.1	70.4	147.6	251.3	267.1	148.3	78.5	56.7	100.8
71	36.3	26.0	20.3	15.0	30.3	85.4	329.0	365.8	272.7	144.5	77.3	48.8	121.8
72	33.7	24.5	19.5	19.5	17.5	37.0	200.5	315.8	198.4	130.8	97.0	61.3	96.8
73	40.7	27.0	22.3	16.3	32.2	65.2	135.5	269.0	294.0	183.2	89.8	56.3	103.1
74	35.9	25.5	17.4	16.5	31.6	73.4	129.8	231.4	177.8	118.0	84.6	42.1	82.4
75	39.5	26.1	21.7	15.5	25.4	72.6	143.1	208.6	279.5	186.0	87.4	51.1	96.7
76	36.6	26.7	19.0	14.2	27.2	51.8	117.4	224.9	191.8	157.5	84.4	49.2	83.7
77	53.6	25.2	18.7	17.9	20.4	29.8	72.2	173.4	295.5	117.7	73.7	45.2	78.8
78	32.9	23.9	16.1	11.9	22.3	23.7	135.9	248.3	214.7	143.3	59.9	35.3	81.2
79	25.3	19.5	13.5	12.3	19.3	23.6	59.6	245.1	118.3	110.0	48.0	28.7	60.7
80	18.3	13.5	11.1	9.2	33.4	52.5	96.3	146.2	332.9	188.4	84.0	53.5	86.6
Av.	36.5	24.8	18.7	15.8	28.1	53.2	142.5	243.6	240.2	148.0	78.6	48.0	90.2

Table 5 - 8 Monthly Available Discharge

(Unit : m³/s)

Month / Year	Jan.	Feb.	Mar.	Apr.	May	Jun.	Jul.	Aug.	Sep.	Oct.	Nov.	Dec.	Annual
70	48.9	41.2	31.8	30.5	55.5	76.4	183.1	176.4	192.0	144.4	78.5	56.7	93.4
71	36.3	32.4	30.0	30.0	30.0	84.7	193.0	201.0	190.4	132.8	77.3	48.8	91.0
72	33.8	31.0	30.0	30.0	30.0	30.0	182.2	199.5	183.8	130.8	95.9	61.3	86.8
73	40.7	33.0	30.0	30.0	30.0	70.2	173.9	182.5	200.3	164.2	89.8	56.3	92.1
74	35.9	32.0	30.0	30.0	30.0	72.6	168.5	164.0	175.9	116.9	84.6	42.1	82.2
75	39.6	31.9	30.4	30.0	30.0	68.7	181.8	160.6	195.7	165.7	87.4	51.1	89.8
76	36.6	32.9	30.0	30.0	30.0	45.6	156.1	187.5	158.9	150.2	84.4	49.2	82.9
77	53.6	31.4	30.0	30.0	30.0	30.0	97.4	175.8	176.1	117.5	73.7	45.2	74.5
78	34.5	30.0	30.0	30.0	30.0	30.0	151.2	176.2	193.9	139.5	59.9	35.3	78.8
79	30.0	30.0	30.0	30.0	30.0	30.0	65.2	170.1	149.4	97.4	30.0	31.1	60.5
80	30.0	30.0	30.0	30.0	30.0	30.0	120.5	129.8	188.4	175.7	84.0	53.5	77.9
Av.	38.2	32.3	30.2	30.1	32.3	51.7	152.1	174.9	182.3	139.6	76.9	48.2	82.7

Table 5 – 9 Monthly Energy

(Unit : GWh)

Month / Year	Jan.	Feb.	Mar.	Apr.	May	Jun.	Jul.	Aug.	Sep.	Oct.	Nov.	Dec	Annual
70	29.4	22.3	18.9	17.9	32.3	42.7	98.9	97.2	111.5	86.6	45.6	34.0	637.3
71	21.8	17.5	17.8	16.8	17.1	47.3	112.6	120.5	110.5	79.6	44.9	29.3	635.8
72	20.3	17.3	17.7	16.9	17.1	16.5	100.1	119.5	106.7	78.3	55.7	36.8	603.0
73	24.4	17.8	17.8	16.9	17.3	39.2	93.4	99.0	116.2	98.5	52.2	33.8	626.6
74	21.5	17.3	17.7	16.8	17.1	40.5	90.6	93.8	102.1	70.0	49.1	25.3	561.8
75	23.8	17.2	18.0	16.9	17.2	38.4	98.6	87.2	113.5	99.4	50.8	30.7	611.6
76	22.0	18.4	17.7	16.8	17.1	25.4	84.6	102.8	90.9	90.0	49.0	29.5	564.3
77	32.2	17.0	17.7	16.8	17.0	16.4	51.8	94.3	100.0	70.1	42.8	27.2	503.4
78	20.7	16.2	17.7	16.7	16.8	16.0	81.2	100.4	112.6	83.7	34.8	21.2	537.8
79	18.0	16.1	17.4	16.4	16.4	15.5	34.3	95.2	85.2	55.8	17.3	18.7	406.2
80	17.8	16.3	16.9	15.7	15.4	15.6	64.1	69.1	108.3	105.5	48.8	32.1	525.7
Av.	22.9	17.6	17.8	16.8	18.3	28.5	82.7	98.1	105.2	83.4	44.6	29.0	564.9

Fig.5-6 Load Duration Curve on Heavy Load Day

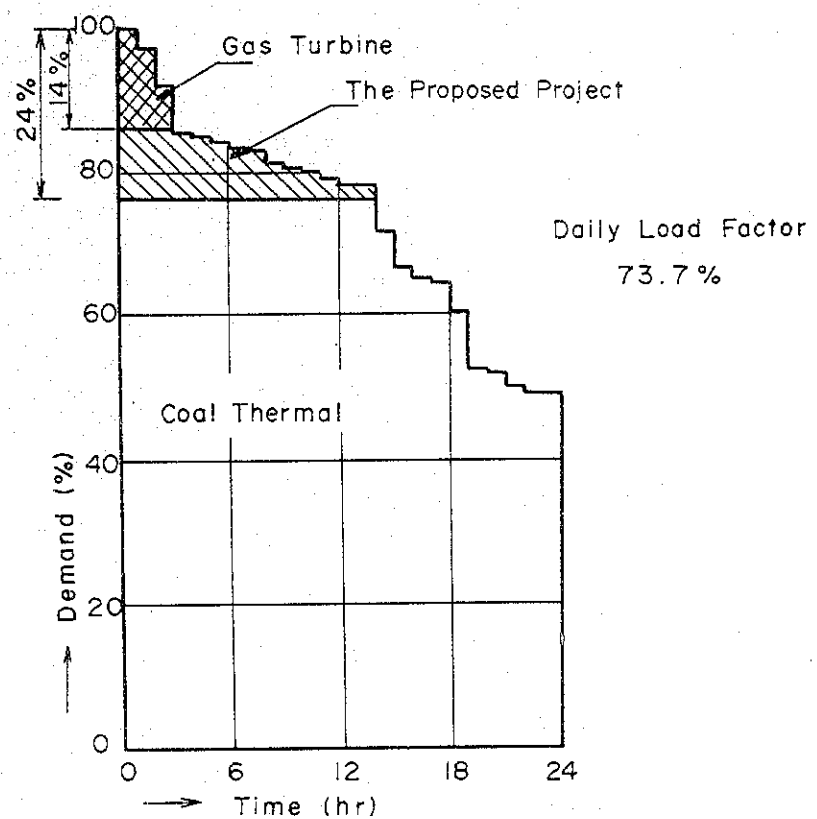

Fig. 5-9 Comparison between Yuam and Pai No.6 Project on the Implementation Priority and the Time Lag between them

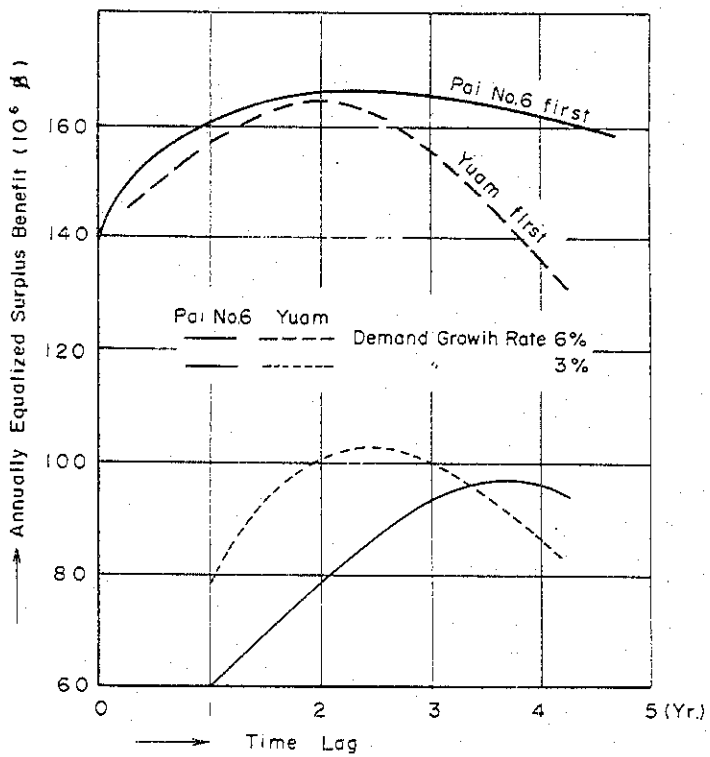

Table 5-10 Comparison among Yuam, Pai No.6 and Chaem No.5

		Yuam H.W.L.170 m Effective Storage 261 x $10^6 m^3$ Installed Cap. 162 MW	Pai No.6 H.W.L.400 m Effective Storage 571 x $10^6 m^3$ Installed Cap. 291 MW	Chaem No.5 H.W.L.430 m Effective Storage 500 x $10^6 m^3$ Installed Cap. 92 MW
Dependable Capacity	MW	128	273	80
Equivalent Peak Duration Time	hr	5.04	6.88	7.10
Annual Energy	GWh	565	620	258
Construction Cost	10^6B	5,748	8,897	5,971
Annual Cost	10^6B	672	1,032	692
Unit Price	B/kWh	1.29	1.77	2.82
Discount Rate 10%, Not considered implementation time. Considered pattern of demand only and not considered magnitude thereof.				
Annually Equalized Surplus Benefit	10^6B/Y	44	155	-298
Benefit Cost Ratio		1.07	1.15	0.58
Discount Rate 10%, Demand Growth Rate 6%/Y, Implementation Time 1991 Yr.				
Annually Equalized Surplus Benefit	10^6B/Y	40	134	
Benefit Cost Ratio		1.06	1.13	
Discount Rate 10%, Demand Growth Rate 3%/Y, Implementation Time 1991 Yr.				
Annually Equalized Surplus Benefit	10^6B/Y	31	87	
Benefit Cost Ratio		1.05	1.08	

CHAPTER 6. PRELIMINARY DESIGN

6.1 Major Structures

(i) Diversion tunnel

Design flood	1,300m^3/sec
	(20 year return period)
Type	Pressure tunnel horse-shoe type
Number of tunnels	2
Inner diameter	9.00m
Length	No. 1 730m
	No. 2 840m

(ii) Cofferdam (Upstream cofferdam)

Type	Rockfill dam with center core
Crest elevation	95.00m
Crest width	10.00m
Crest length	290.00m

(iii) Dam

Type	Rock fill dam with center core
Crest elevation	176.00m
Crest length	350.00m
Crest width	10.00m
Dam volume	4,650,000m^3
Normal high water level	170.00m
Max. water level	170.90m

(iv) Spillway

Design flood	6,200m^3/sec (P.M.F)
Design discharge	4,770m^3/sec
Crest elevation	158.00m
Crest length	60.00m (including pier width)
Dissipator	Ski jump type

(v) Power intake

Number of intakes	1
Max. inflow	$215m^3/sec$
Sill elevation	130.00m

(vi) Power tunnel and penstock

Number of tunnels and penstocks	1 - 2
Max. discharge	$215m^3/sec$
Inner diameter	7.80m (power tunnel)
	7.80 - 5.50 - 4.40m (penstock)
Total length	538.00m

(vii) Surge tank

Type	Differential surge tank

(viii) Powerhouse

Type	Semi-outdoor Type
Turbine type	Vertical Shaft Francis
Elevation of turbine center	69.00m

6.2 Electrical Equipment

(i) Power plant output 162,000kW

(ii) Turbine

Type	Vertical-shaft Francis turbine
Number of units:	2
Normal effective head	87.3m
Max. discharge	$107.5m^3/sec$
Output	82.800kW
Revolving speed	188rpm

(iii) Generator

Type	Three-phase, AC, synchronouse generator
Number of units	2
Capacity	90,000kVA (power factor: 0.9 lagging)
Frequency:	50Hz

(iv) Main transformer

Type	Three-phase, outdoor, oil-immersed
Number of units	2
Capacity	90,000kVA
Voltage	230/13.8kV

(v) Switchyard equipment

Type	Outdoor conventional type
Bus connection	Double-bus system
Number of circuits connected	2 (230kV)
	1 (69kV)

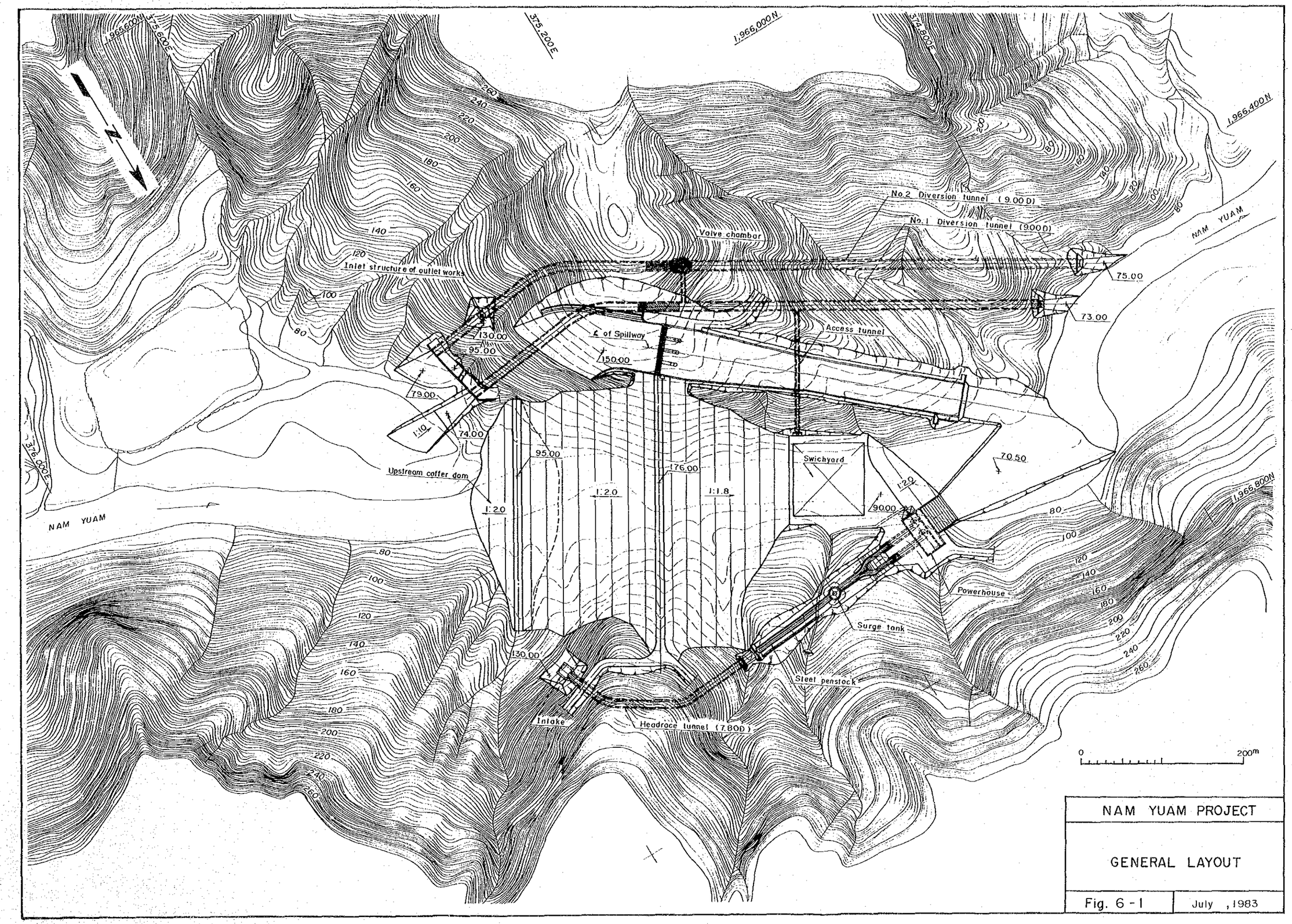

NAM YUAM PROJECT	
GENERAL LAYOUT	
Fig. 6 - 1	July , 1983

TYPICAL SECTION OF DAM

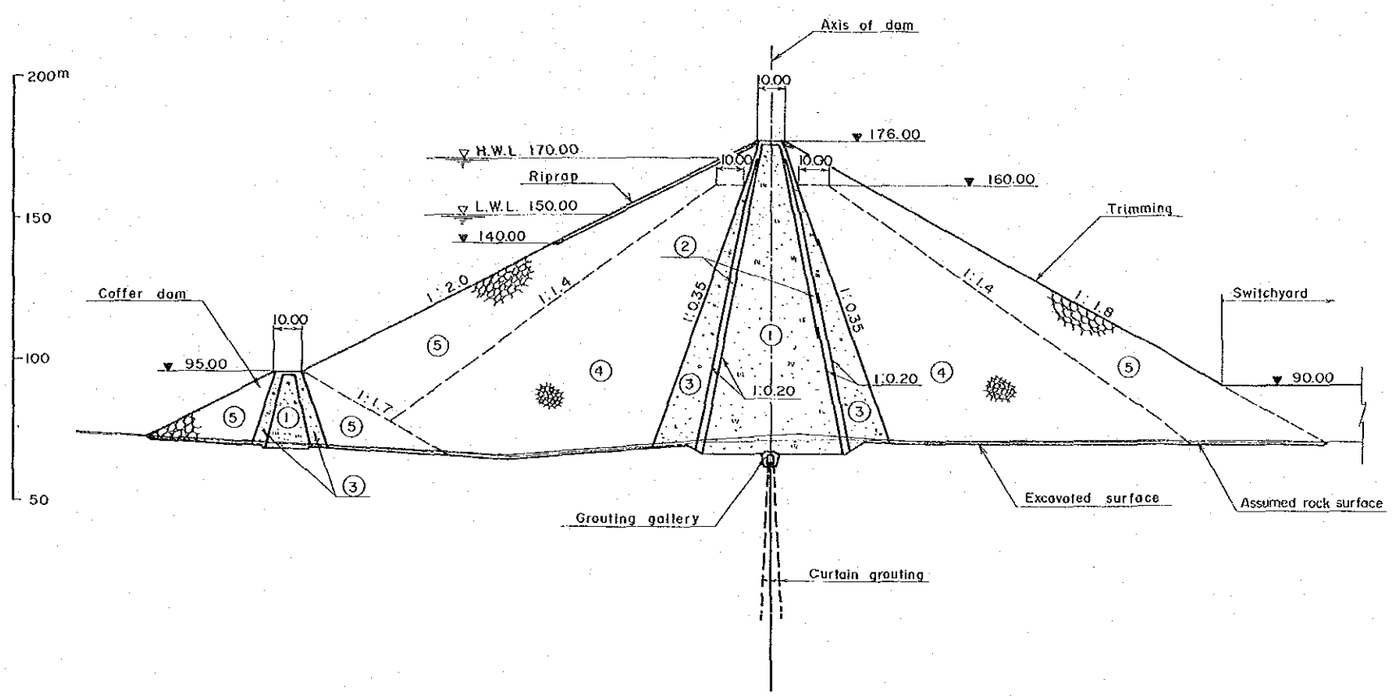

PROFILE

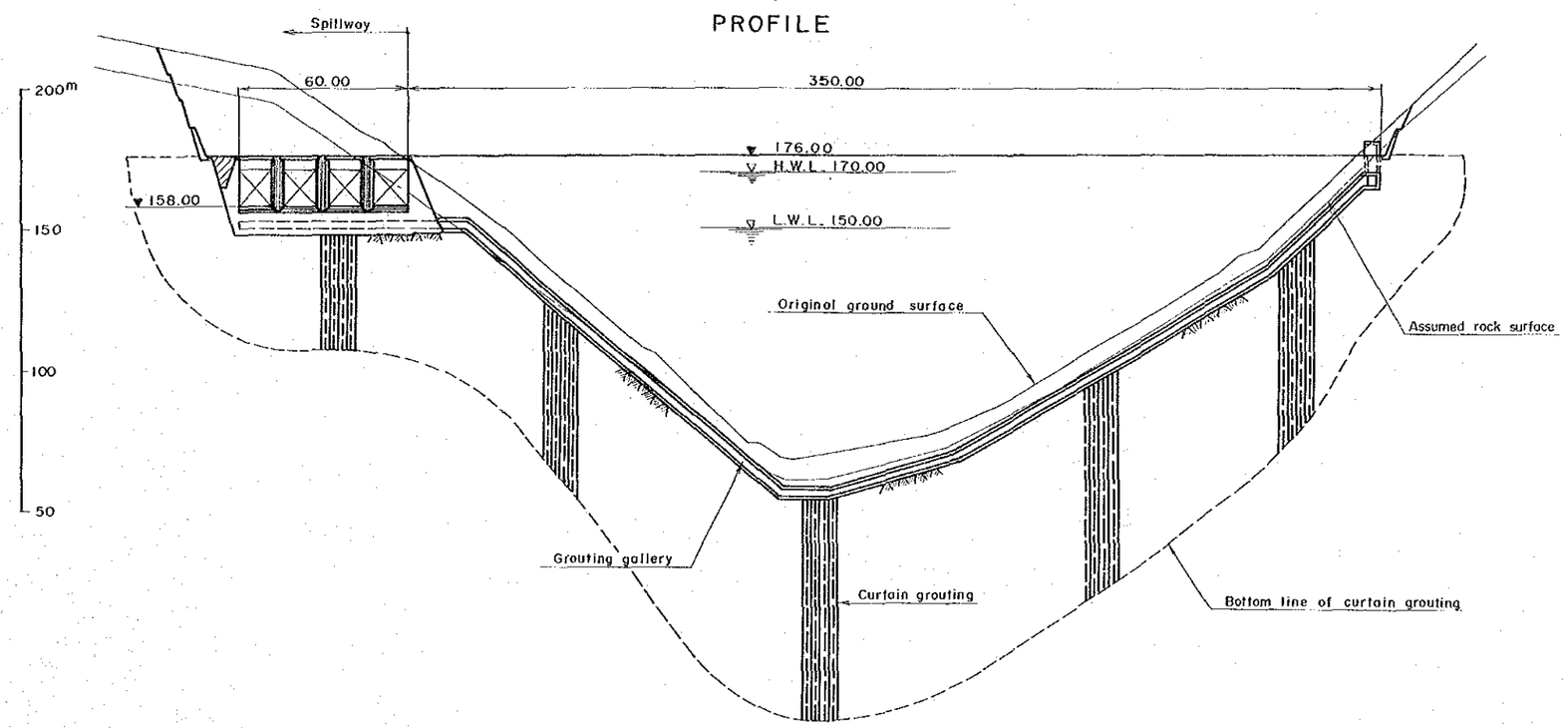

LEGEND

①	Impervious core
②	Filter fill
③	Transition fill
④	Smaller size rock fill
⑤	Larger size rock fill

0 — 100m

NAM YUAM PROJECT

DAM

TYPICAL SECTION & PROFILE

Fig. 6 - 2 | July ,1983

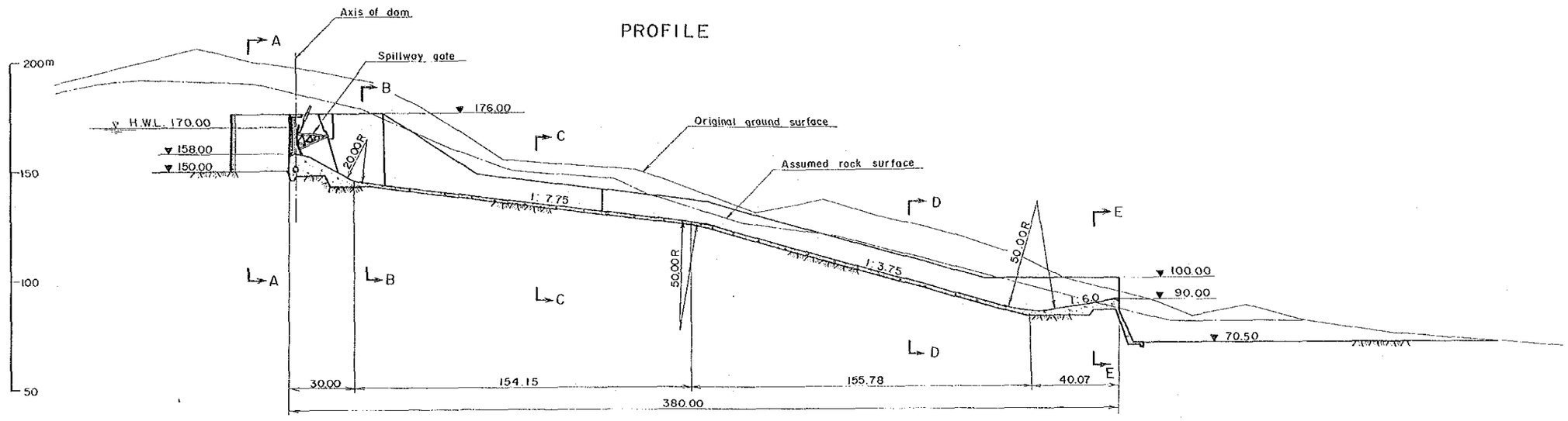

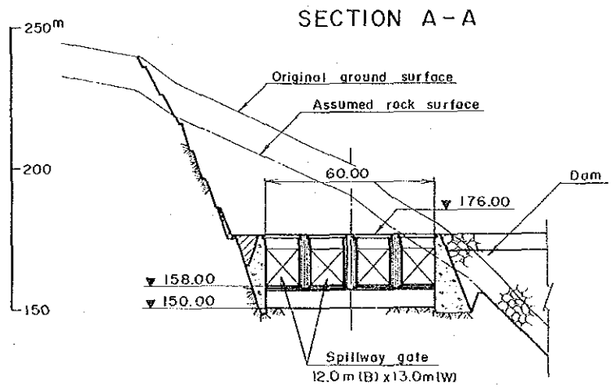

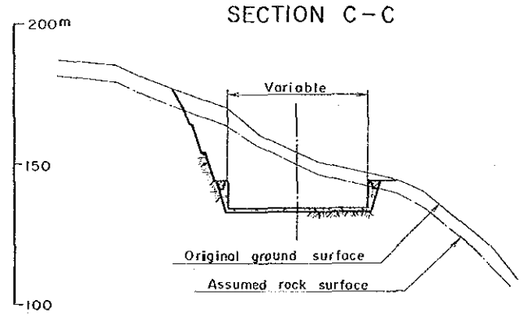

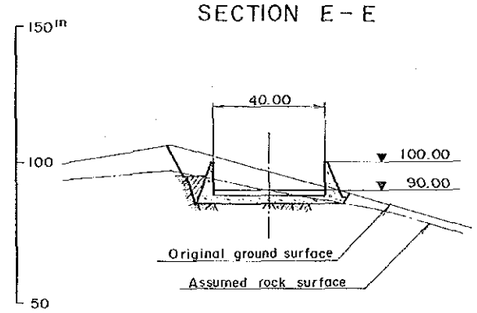

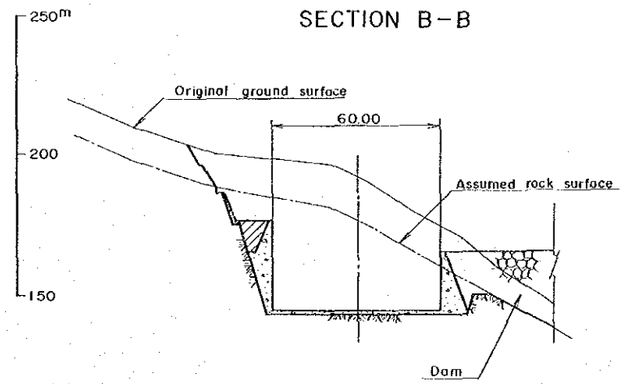

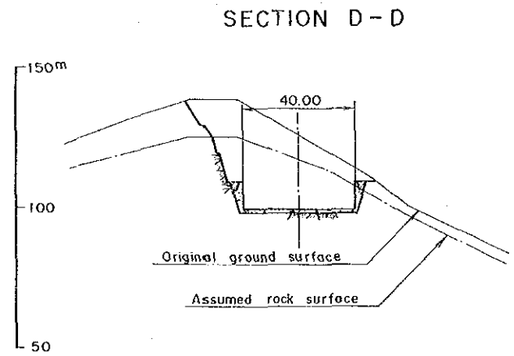

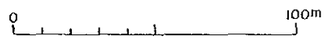

NAM YUAM PROJECT

SPILLWAY

PROFILE & SECTIONS

Fig. 6-3 | July, 1983

PROFILE

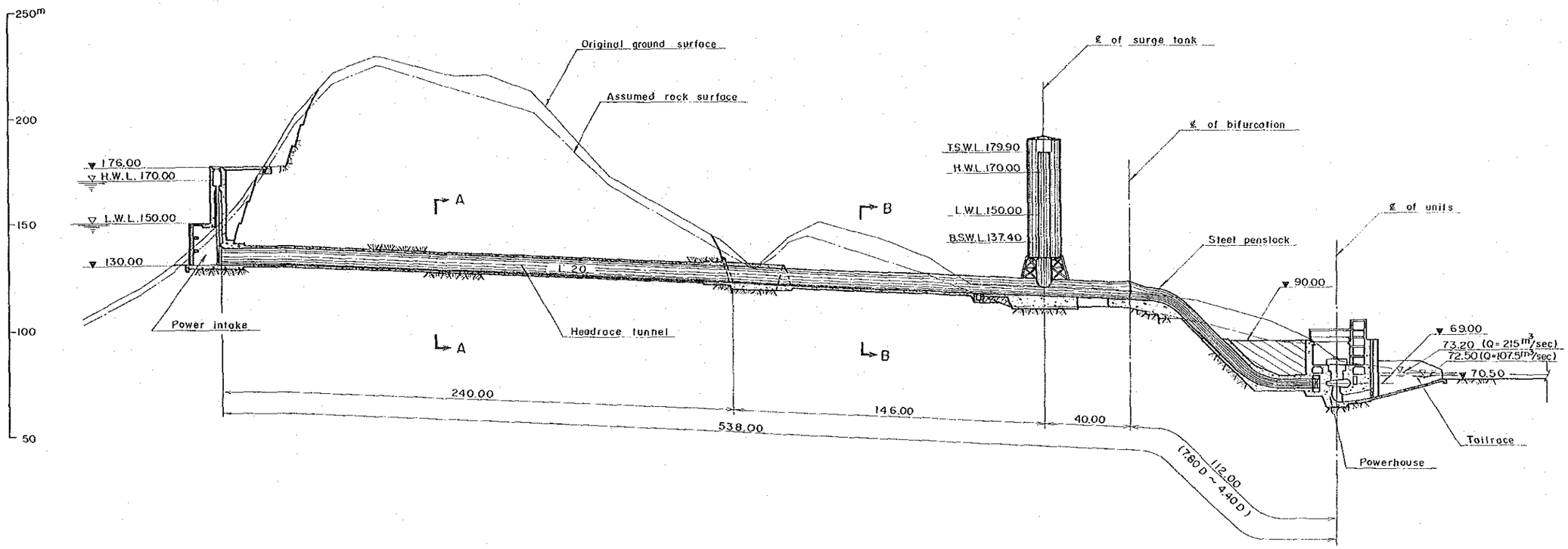

SECTION A-A

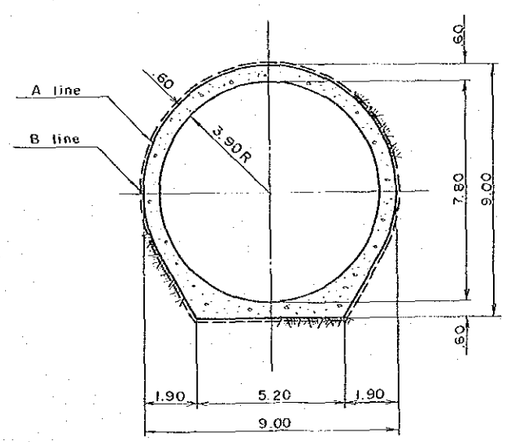

SECTION B-B

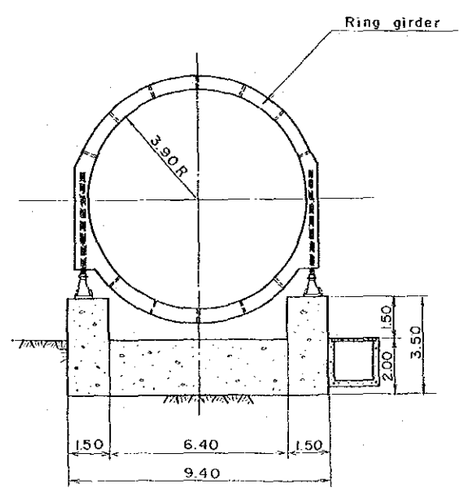

0 100m (Profile)

0 10m (Section A-A and B-B)

NAM YUAM PROJECT	
WATERWAY PROFILE & SECTIONS	
Fig. 6-4	July, 1983

TRANSVERSE SECTION

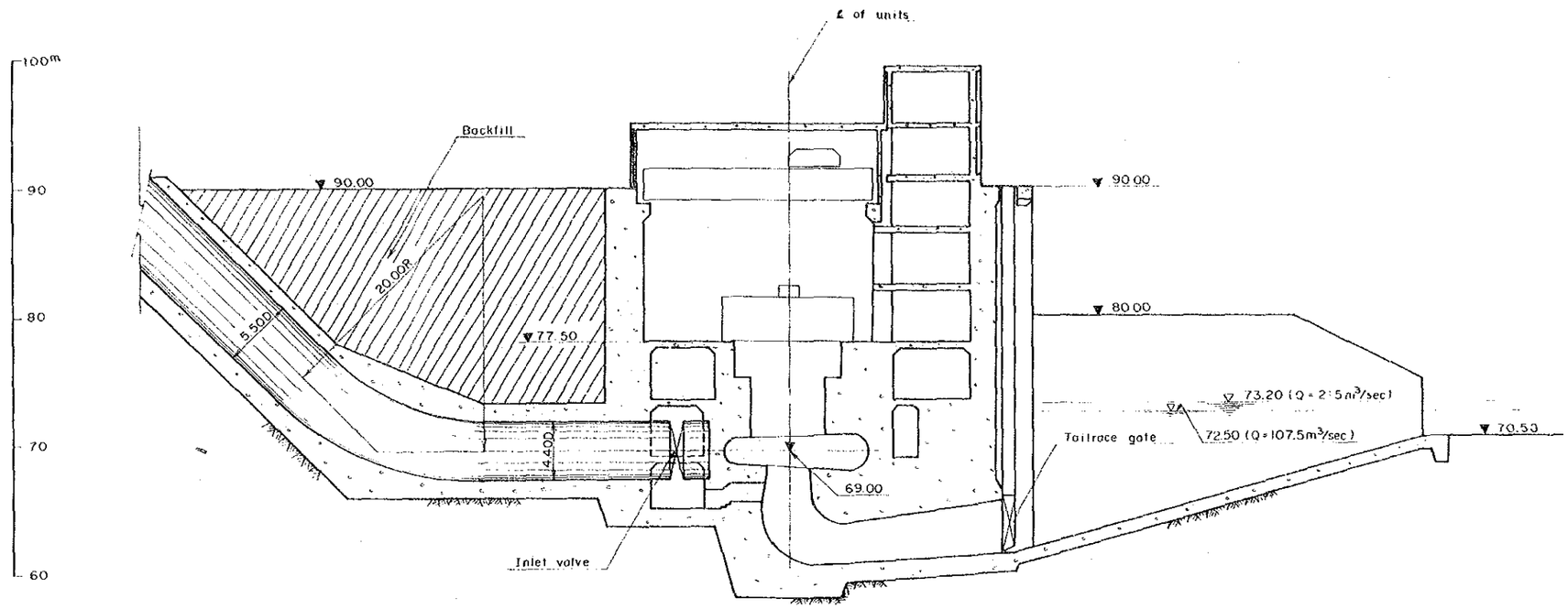

LONGITUDINAL SECTION

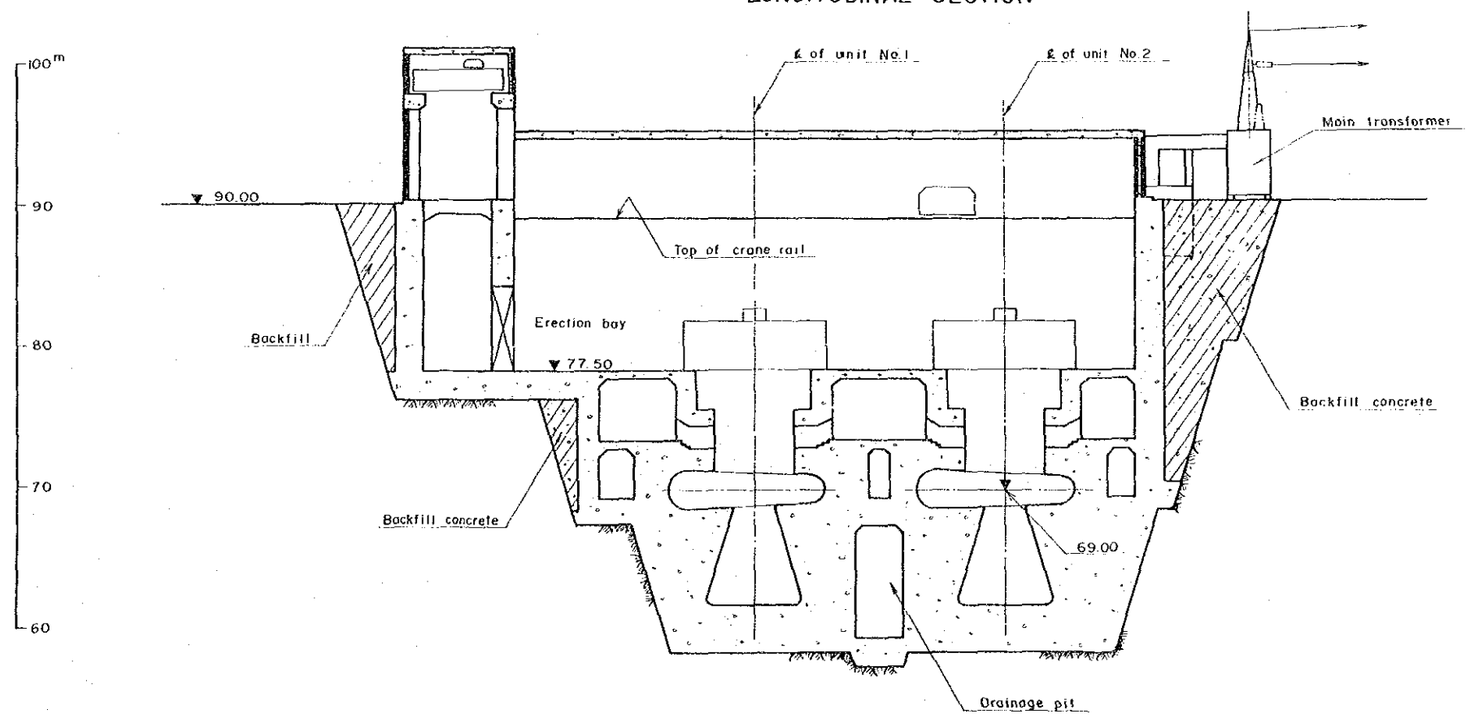

0 20m

NAM YUAM PROJECT	
POWERHOUSE TRANSVERSE & LONGITUDINAL SECTIONS	
Fig. 6-5	July, 1983

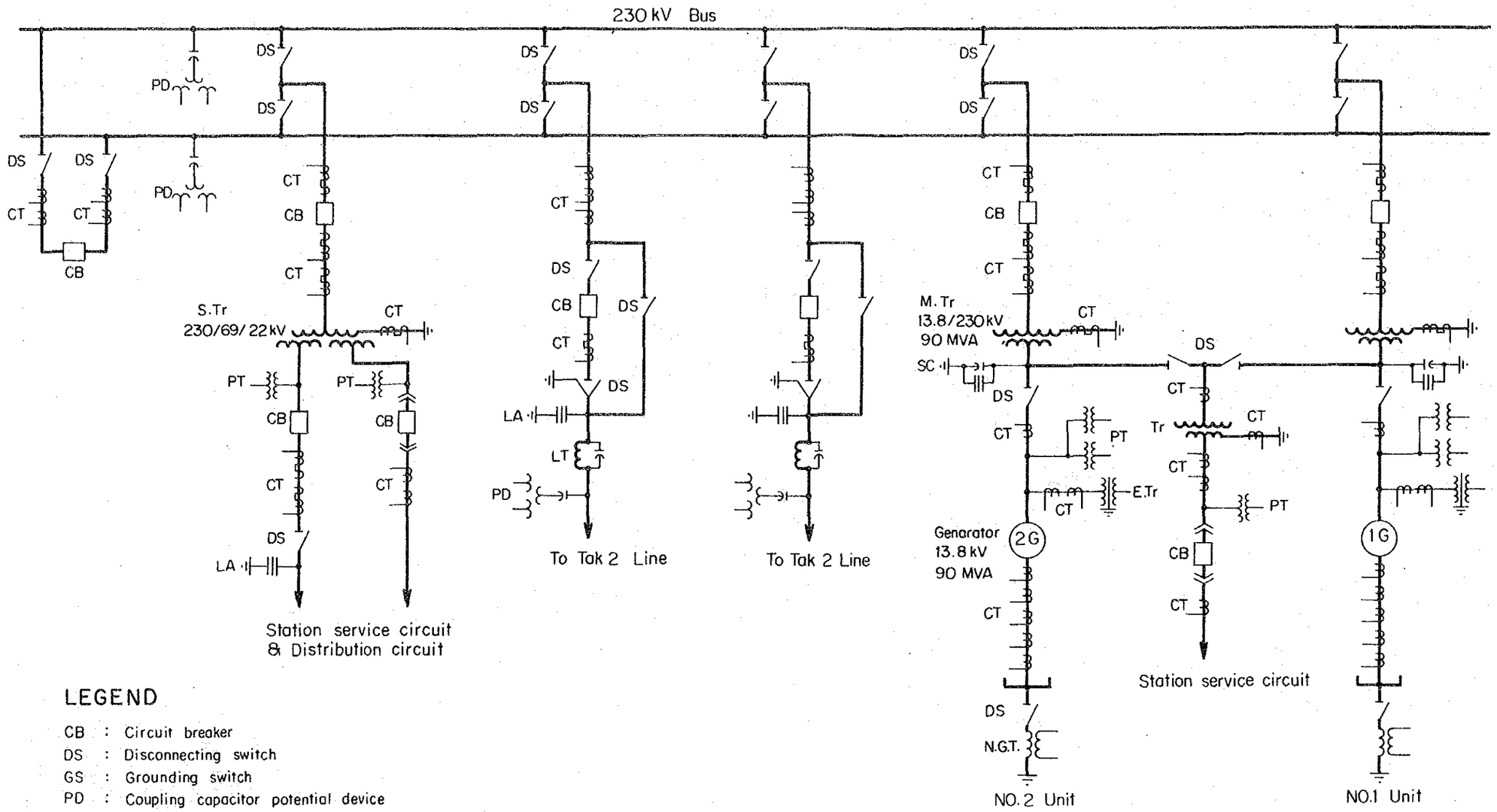

LEGEND

CB : Circuit breaker
DS : Disconnecting switch
GS : Grounding switch
PD : Coupling capacitor potential device
PT : Potential transformer
CT : Current transformer
LA : Lightning arrester
LT : Line trap
SC : Static condenser
M.Tr : Main transformer
E.Tr : Excitation transformer
N.G.T. : Neutral grounding transformer
S.Tr : Station service transformer

NAM YUAM PROJECT	
SINGLE LINE DIAGRAM	
Fig. 6-6	March, 1984

153

Fig.7-1 Electric Power System of Main Part of Thailand in 1990

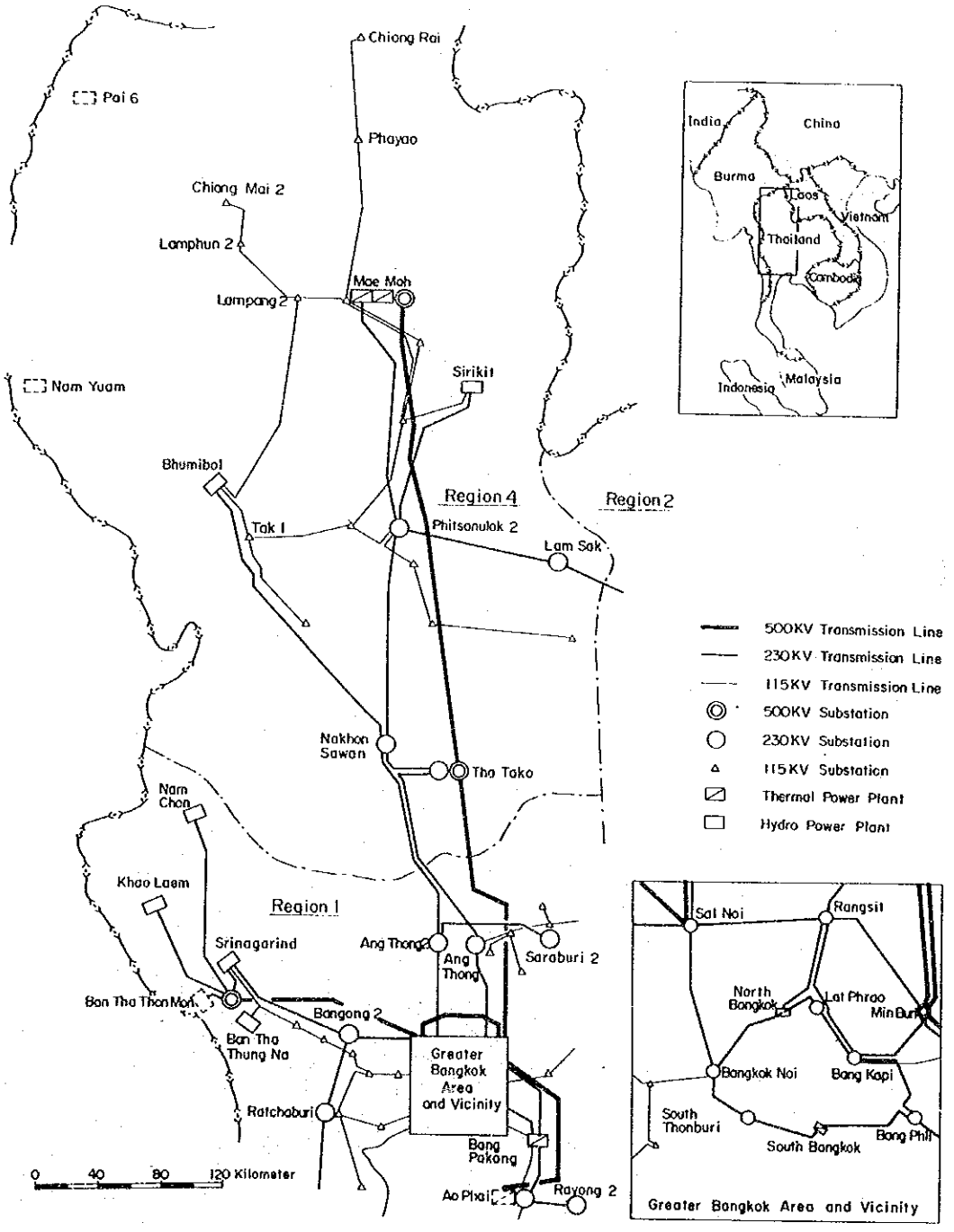

Fig. 7 - 9 230kV Transmission Line Route

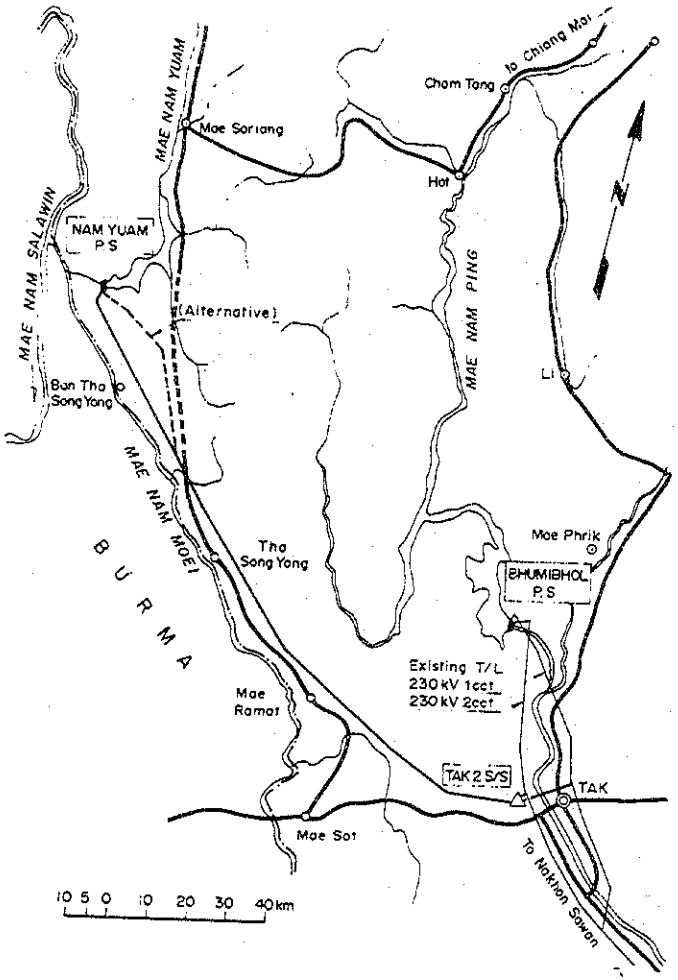

Fig. 7 -10 230kV Transmission Line Standard Suspension Tower

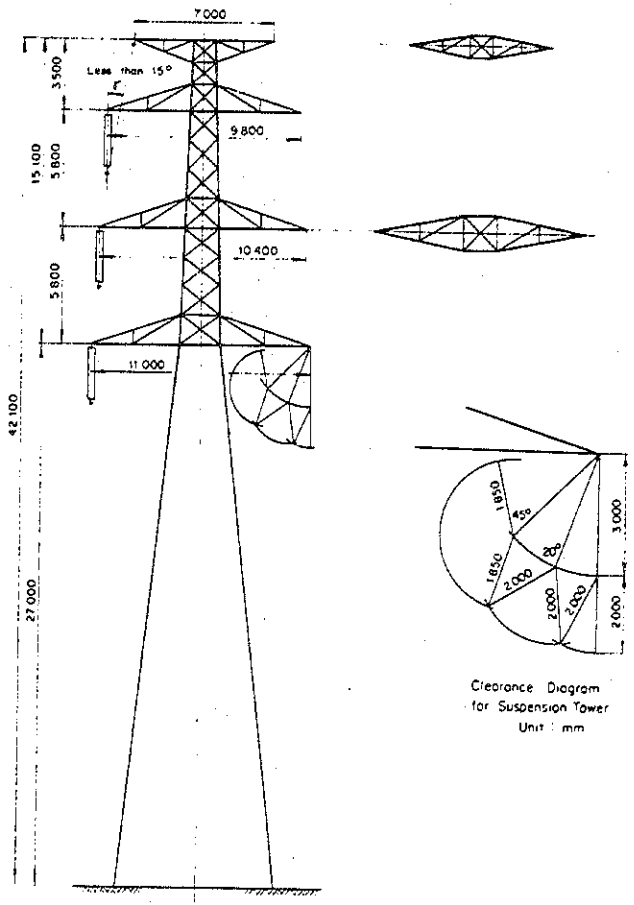

CHAPTER 8. CONSTRUCTION PLANNING AND COST ESTIMATION

8.1 Construction Planning

Fig. 8-1 shows the construction schedule of this project. This was made, taking into consideration the construction scale, its methods, locations of structures, weather conditions, etc.. It takes 5 years and a half (5.5 yr) in total for construction, i.e., from the starting of construction to that of operation of power plants. The condition for carrying this schedule out is that making roads for construction and arranging camping facilities should be completed beforehand.

The following is the outline of the construction as well as about roads for construction. As shown in Fig. 1-2 "Location Map of the Project", two alternative routes for construction road are planned.

Alternative Route 1 crosses Yuam river to the right bank at around Ban Mae Khatuan (2.1km in length), and then from Ban Mae Khatuan to Ban Tha Rua, the existing road which has been constructed by the Department Mineral Resources (24.5km in length) can be used after improving the present road condition. Further new construction road (19.3km in length) has to be constructed along the right bank up to the projected sites. This route takes 45.9km in total length.

Alternative Route 2 crosses the Yuam river at the junction with the Ngao river, and then goes to Ban Tha Rua through the road to be built newly along the right side of the Yuam river (11.1km in length), and takes the same route as Route 1 to the site. This route takes 30.4km in total length.

Comparing these two routes, Route 2 has been judged appropriate. Although Route 1 advantageously has shorter distance of newly constructed road, the existing portion of the route is poor in its alignment and longitudinal gradient which should be improved for

heavy equipment and thus requires large amount of improvement cost rendering the total cost thereof higher than of Route 2. In addition, Route 1 passing over a mountain of 800m in elevation would have difficulties in maintenance and repair during the project's construction period. The road in Route 2 should be completed before the commencement of the main construction works.

Diversion tunnel construction works start at the beginning of the dry season of the first year, and is to be completed by the beginning of the dry season of the second year. At this point, the river flow is to be diverted into the diversion tunnel. The excavation of the dam foundation is to be started from the upper part, and after turning the river flow into diversion tunnel, excavation works of the river bed is to be started. The embankment work of the dam starts from the upstream cofferdam, and successively moves to the main body of the dam. Three years and a half (3.5 yr) are estimated for the dam embankment work, and this work is to be completed by the beginning of the dry season of the fifth year. During this period, foundation treatment of the dam and construction of spillway are going on in parallel.

For rock material, quarry of calcareous sandstone is considered, which found on the left bank of the river, about 1km upstream from the damsite. Also, the excavated rock from spillway construction and other construction's should be fully used. As for filter material and concrete aggregate, there is no natural ones nearby, and so they should be made artificially. Core material is full in talus deposit of weathered shale, and in soil on the surface of spillway, and in the quarry

Immediately after the dam is completed, the installation of the outlet works are to be started and are to be completed by the end of the dry season of the sixth year.

As for the filling reservoir, the average discharge at Ban Tha Rua Gauging station indicates that, the filling reservoir is started

from April, thus the reservoir surface level will be able to reach up to the NHWL by the middle of July. Construction works for intake, headrace, surge tank, penstock, etc. are started from the second year respectively, and are to be carried out in parallel. As for the construction of power station, after the installation of the overhead crane, as the construction progresses, the installation works of turbine and generator are to be started and to be completed within about one year and a half (1.5 yr). After the various test for the commencement of operation which are to be performed while reservoir filling, the operation of power plants could be in service in the middle of July of the last year (6th yr.).

It is planned that the construction of power transmission lines and switchyard are to be carried out during the installation of turbine and generator and to be completed at the same time as turbine and generators are completed.

8.2 Construction Cost and Financial Program

Construction cost of this project is estimated refering to the labor wages, unit prices of construction materials, unit construction cost of the similar projects, etc., as of December 1982 price level in Thailand. Among labor wages, material costs, machinery costs, etc., those which can be provided in Thailand are estimated in local currency, and the others are estimated in foreign currency.

Yearly financial program is figured out over the whole construction period, assuming the actual amount of payment in each year being calculated on the basis of construction schedule, and procedure of payment familiar in Thailand being taken into consideration. These considerations were also taken in the case of hydraulic equipment, electrical equipment etc.. These are on Table 8-1 and 8-2.

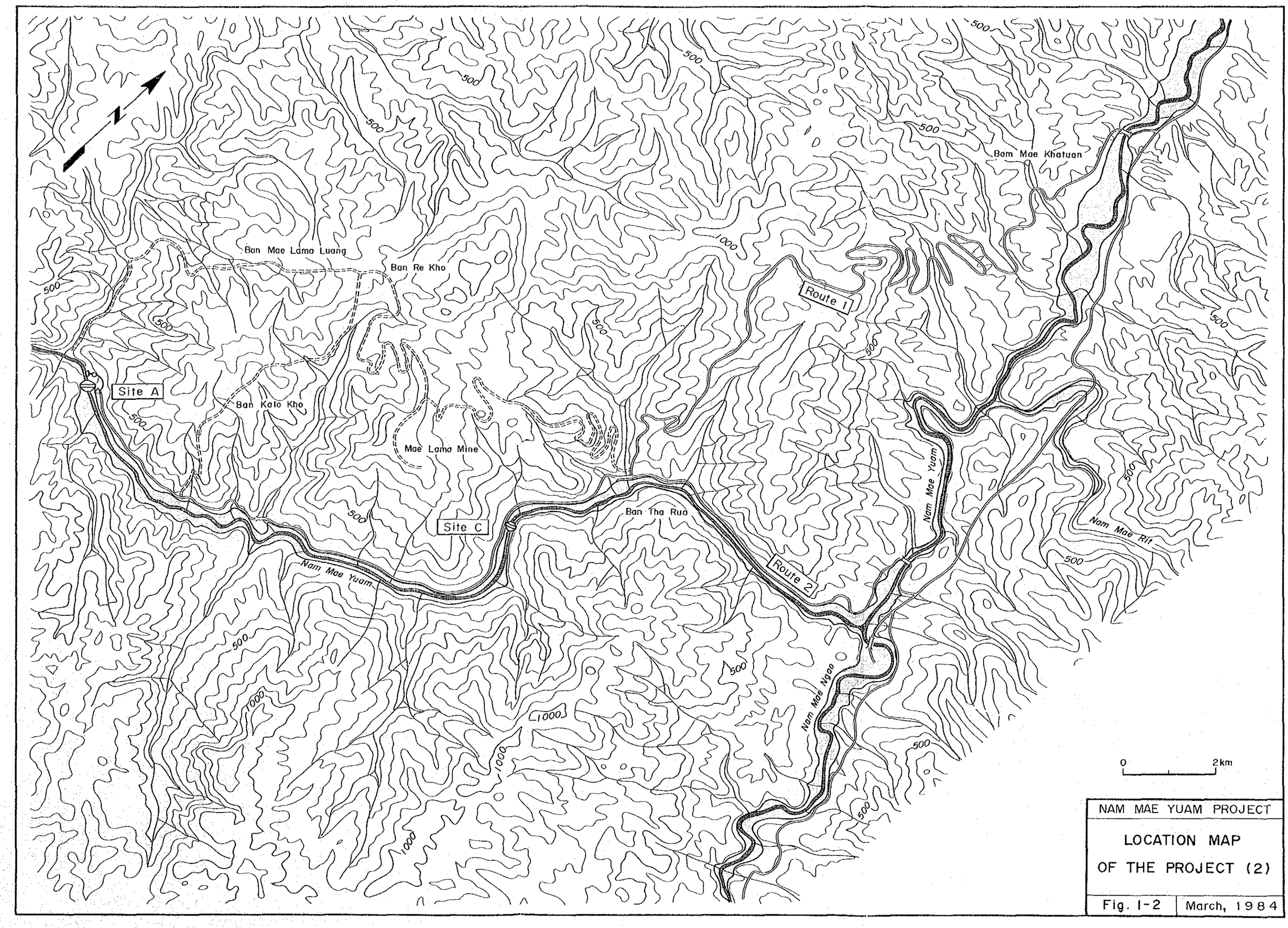

NAM MAE YUAM PROJECT

LOCATION MAP OF THE PROJECT (2)

Fig. 1-2 | March, 1984

Fig. 8-1 Construction Schedule of Nam Yuam Project

Description	Item	Unit	Quantity	Notes
Preparation Works				
Road. Replacement		km	23.4	
Road. Access		km	30.4	
Camp Facilities		L.S	1	
Clearing		L.S	1	
Civil Works				
Care of River		L.S	1	
Diversion Tunnel	Ex (Open)	m^3	74,000	
	Ex (T)	m^3	138,000	
	Con (T)	m^3	28,000	
Dam	Ex	m^3	260,000	
	Grout	L.S	1	
	Em	m^3	4,652,000	
Spillway	Ex	m^3	1,497,000	
	Con	m^3	102,000	
	Gate	L.S	1	
Outlet Works	Ex	m^3	14,100	
	Con	m^3	11,800	
	Valve	L.S	1	
Intake	Ex	m^3	19,000	
	Con	m^3	6,000	
	Gate	L.S	1	
Headrace	Ex	m^3	17,000	
	Con	m^3	5,100	
	Grout	L.S	1	
Surge Tank	Ex	m^3	—	
	Con	m^3	9,000	
	S. Tank	L.S	1	Steel Tank
Penstock	Ex	m^3	200,000	
	Con	m^3	13,500	
	S. Pipe	L.S	1	Steel Pipe
Power House	Ex	m^3	75,000	
	Con	m^3	40,000	
	S. S	L.S	1	Super Structure
Tailrace	Ex	m^3	103,000	
	Con	m^3	6,500	
	Gate	L.S	1	
Electrical Equipment		L.S	1	
Transmission Line		L.S	1	
Switchyard Equipment		L.S	1	

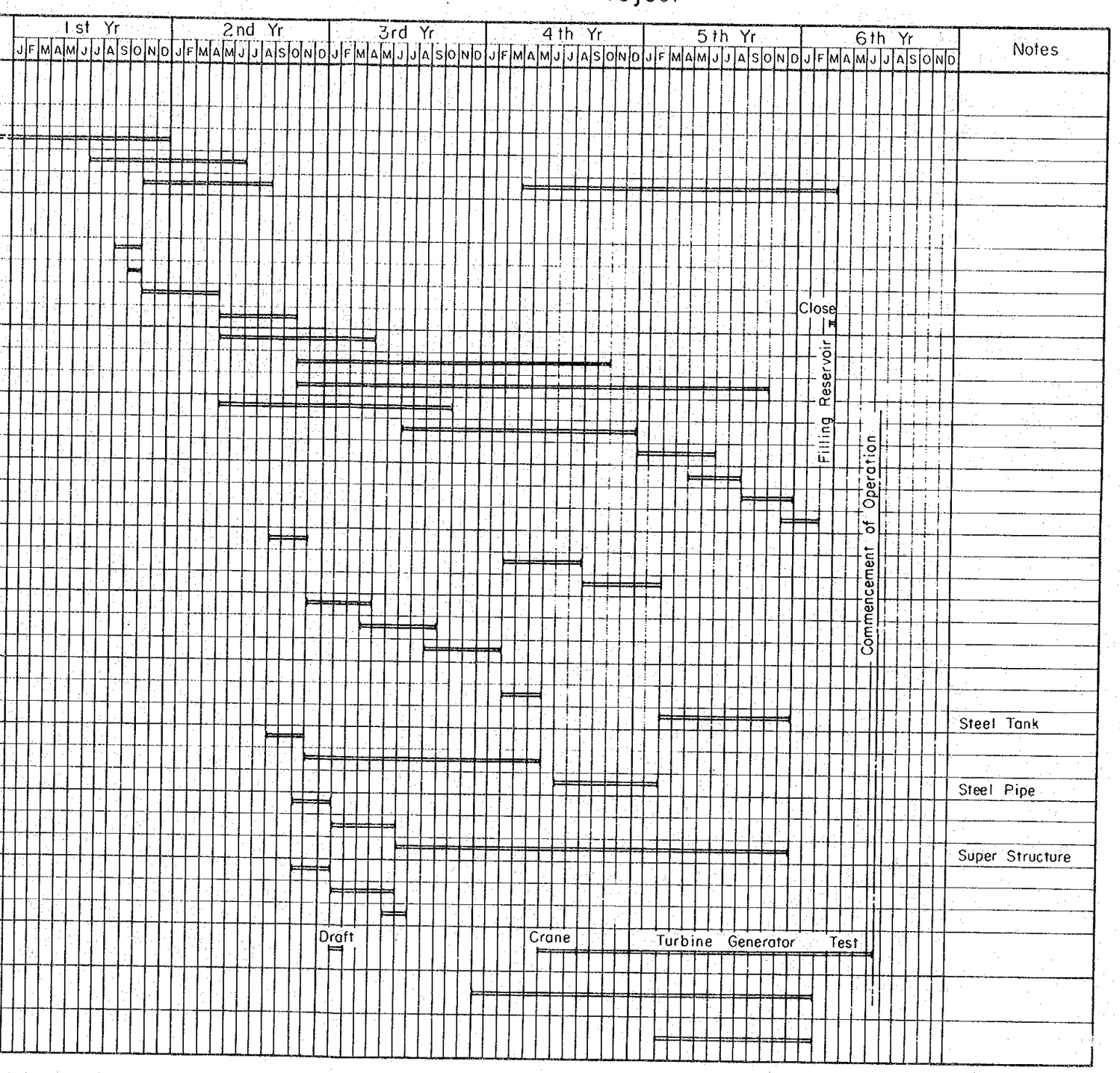

Table 8-1 Construction Cost

Unit: 10^6 Baht

Item	Total	Currency	
		Foreign	Local
Preparation Works Camp, Road, Compensation Clearing, Contingency	610.0	98.6	511.4
Civil Works			
Diversion & Care of River	261.0	58.9	202.1
Dam	893.0	467.7	425.3
Spillway	519.0	81.0	438.0
Outlet Works	41.0	5.9	35.1
Intake	25.0	2.7	22.3
Head-race	49.0	10.0	39.0
Surge Tank	32.0	2.8	29.2
Penstock	69.0	13.0	56.0
Power Station	213.0	20.9	192.1
Tail-race	31.7	5.2	26.5
Miscellaneous	93.8	35.5	58.3
Contingency	222.5	70.4	152.1
Sub-total	2,450.0	774.0	1,676.0
Hydraulic Equipment			
Diversion Gate	9.8	0.5	9.3
Spillway Gate	43.8	34.2	9.6
Intake Gate	25.4	21.6	3.8
Tail-race Gate	8.0	6.8	1.2
Outlet Valve	19.5	16.6	2.9
Penstock	90.0	67.5	22.5
Surge Tank	66.0	49.5	16.5
Contingency	26.5	19.3	7.2
Sub-total	289.0	216.0	73.0

Item	Total	Currency	
		Foreign	Local
Electrical Equipment	628.8	534.5	94.3
Telecommunication & Transmission Line	606.6	424.6	182.0
Engineering Fee	137.6	82.6	55.0
Total	4,722.0	2,130.3	2,591.7
Interest during Construction	1,026.0	—	1,026.0
Total Project Cost	5,748.0	2,130.3	3,617.7

Table 8-2 Financial Program

Unit: 10^6 Baht

Year	Total	Foreign	Local	Remark
1st Yr	871.2	166.5	704.7	
2nd Yr	598.0	124.3	473.7	
3rd Yr	1,132.9	361.9	771.0	
4th Yr	1,832.1	742.1	1,090.0	
5th Yr	1,127.5	614.9	512.6	
6th Yr	186.3	120.6	65.7	
Total	5,748.0	2,130.3 (92.62 million $)	3,617.7	

These amount are based on the price level as of December, 1982.

1US$ = 23 Baht

CHAPTER 10. ECONOMIC EVALUATION

10.1 Method for Economic Evaluation

Generally, economic evaluation of hydro power project is done in the form of comparison in cost between hydro power and alternative thermal power with the capacity of the same level. In this case, the electricity generation cost of thermal power is regarded as a benefit of hydro power project.

In economic evaluation of this project, electricity generation cost and benefit by alternative thermal power is compared by discounted cash flow method, and also sensitivity analysis is done as to how the changes of fuel price and discount rate affects the economy of this project.

Since the Nam Yuam power plant is of hydroelectric coping with peak load, the alternative thermal is to be combination of gas turbine and steam thermal which are for peak and base load, respectively. Table 10-1 and 10-2 indicates outline of the projects considered in the economic evaluation and basic criteria for the study.

10.2 Cost for the Project

Economic analysis has been performed for the period of fifty-seven years, and the total cost for operation & maintenance and investment for equipment is taken as the annual cost of the project. The cost is converted into present value, and its total for the fifty-seven years is taken as the cost for the project. Operation & maintenance cost is calculated by the following ratio against construction cost.

Equipment	Operation & maintenance cost rate
Dam and Reservoir Power Station Transmission Line	1.5%

10.3 Benefit of Project

1) Alternative thermal power

The followings are the outline of features of alternative thermal power chosen as the criteria for economic evaluation of this project.

(i) The utility rate of plants of thermal power and gas turbine is as follows.

thermal power : 70%

gas turbine : 7%

(ii) The scale of alternative plants is taken as having the same capacity as this project. (refer to Table 10-5)

(iii) Construction cost is computed on the basis of the construction unit price of the present thermal power plants in Thailand.

For the reasons below, the combination of alternative thermal power was decided as follows.

Case A. Gas turbine using diesel oil and thermal power using imported coal.

Case B. Gas turbine and thermal power using natural gas.

a) Lignite, as fuel, costs least, but is not very rich resources.

b) Oil price had kept rising since 1973, and fell in 1983, but it still keeps a high level, and its supply is unstable.

c) Imported coal costs the next least to lignite, and is rich resources and is available over the world. Consequently, its supply is expected to be stable.

d) Natural gas in Siam Bay has been utilized since September 1981. So far there is no plan to apply it for new thermal power, but it is widely applicable as substitute for imported oil.

Yearly operation & maintenance cost rate of the alternative thermal power goes as follows.

Coal Thermal Power	:	3%
Natural Gas Thermal Power	:	2.5%
Gas Turbine	:	3%

2) Fuel cost

Crude oil price, which had been rising since the autumn of 1973, fell by about 15% (FOB price) in 1983, due to miscontrol of product and depression in demand. This also influences coal price. At any rate, this study uses fuel price as of 1982 (refer to Table 10-3). As for coal price, taking into consideration the conditions of coal in Australia and South Africa, its price is predicted as 70 US$/t in CIF price (45 US$/t in FOB price, 25 USE/t as charge for shipping and staying, insurance etc.).

Fuel price still fluctuates, and so the sensitivity analysis of the project is done as well.

10.4 Economic Evaluation

The result of economic evaluation by cash flow is shown in Table 10-6 to 11, and the Nam Yuam project has enough economy for any combination of alternative thermal power.

Also as the result of sensitivity analysis in Fig. 10-1 to 8 shows it can keep its economy regardless of some changes in discount rate, fuel price, etc..

Also, if coal price (FOB) would be reduced by the same rate as OPEC Standard Crude Oil Price being reduced in March 1983 (34 US$/Ballel to 29 US$/Ballel), coal price will be about 63.4 US$/t in CIF price (which corresponds to the reduction by about 9.5%). At any rate, even in this case, it retains enough economy.

10.5 Financial Evaluation

According to the EGAT Annual Report 1982, cost of energy at a power station is calculated to be 0.89 B/kWh. This is an average cost based on whole energy demand which is characterized by an annual load factor of 67% and a load factor on a heavy load day of 73.7%. Then, in case that all the new demand will be met by newly constructed thermal power plants and that the thermal power plants will be operated by an average plant factor of 70%, the cost of energy is to be 1.27 B/kWh.

On the other hand, cost of energy of the alternative thermal power plant for the Nam Yuam Project is 1.33 B/kWh which has been collected by appropriate factors. Therefore, power tariff of the Nam Yuam Project is derived as follows, on the basis of the present cost of energy.

$$0.89 \times \frac{1.33}{1.27} = 0.93 \text{ B/kWh}$$

The resultant cash flow is shown in Table 10-13. Despite of the slight escalation rate, i.e. 3%, for the power tariff as well as for the construction cost and operation & maintenance cost, the investment of the Nam Yuam Project gives Financial Internal Rate of Return (FIRR) of about 10% for the entire service life.

Table 10-2 Basic Criteria for Economic Study

Method of Analysis	:	Discounted Cash Flow Method		
Study Period	:	57 years (1982 - 2038)		
Discount Rate	:	10%		
Escalation				
		Case 1	Case 2	Case 3
O & M Cost	:	not considered	not considered	not considered
Fuel Cost	:	not considered	3%	3%
Replacement Cost	:	not considered	not considered	5%
Shadow Price Factor				
Foreign Currency	:	110%		
Local Currency for Hydro	:	85%		
Local Currency for Thermal	:	95%		
Fuel Price	:	100%		
Service Life of Facilities				
Dam & Reservoir	:	50 years		
Hydro Power Plant	:	25 years		
Thermal Power Plant	:	25 years		
Gas Turbine Power Plant	:	20 years		
Transmission Line	:	40 years		
Conversion Rate of Currency	:	US$1.00 = ฿23.0		

Table 10-3 Fuel Cost of Alternative Thermal Power Plants

	Steam Turbine		Gas Turbine	
	Imported Coal	Nutural gas	Diesel oil	Natural gas
Fuel calorie	6,300 (kcal/kg)	8,000 (kcal/m^3)	10,800 (kcal/kg) (9,300 kcal/kl)	8,000 (kcal/m^3)
Annual thermal efficiency	36% x 0.96	37% x 0.96	25%	25%
Required calorie	2,488 (kcal/kWh)	2,421 (kcal/kWh)	3,440 (kcal/kWh)	3,440 (kcal/kWh)
Fuel consumption rate	0.395 (kg/kWh)	0.303 (m^3/kWh)	0.37 (l/kWh)	0.43 (m^3/kEh)
Fuel price (FOB)	45 (US$/t)	-	-	-
Fuel price (CIF)	70 (US$/t)	-	-	-
Fuel price at plant	0.07 (US$/kg)	2.79 (B/m^3)	6.70 (B/ℓ)	2.79 (B/m^3)
Fuel cost of power generation	0.636 (B/kWh)	0.845 (B/kWh)	3.02 (B/kWh)	1.2 (B/kWh)

Table 10-4 Unit Construction Cost of Alternative Thermal Power Plants

Imported coal-fired thermal	840	(US$/kW)
Natural gas-fired thermal	560	(US$/kW)
Gas turbine (diesel oil, Natural gas)	270	(US$/kW)

Note: Interest during construction is not included in the avove cost.

Table 10-5 Alternative Thermal Power Plant

Item	Unit	Gas Turbine	Steam Thermal
Required Installed Capacity	(MW)	89	64
Firm Capacity of Hydro Nam Yuam	(MW)	74	51
Annual Energy Production	(10^6kWh)	55	515
Station Service Power Use	(%)	2	6
Annual Available Energy	(10^6kWh)	54	483

Note: Required installed Capacity

$$= \text{Firm Capacity of Hydro Nam Yuam} \times \frac{1}{(1-SSt)} \times \frac{1}{(1-FOt)} \times \frac{1}{(1-OHt)}$$

where,

SSt : Station service power use = 2,6%
FOt : Forced outage rate = 4%
OHt : Overhaul rate = 12%

Fig. 10-1 Sensitivity Analysis

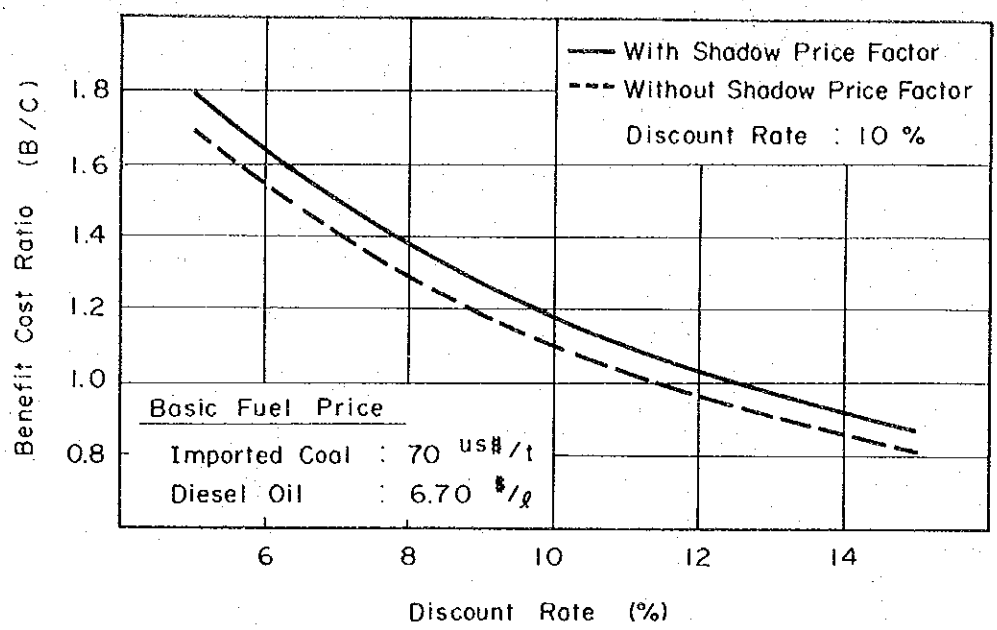

Fig. 10-2 Sensitivity Analysis

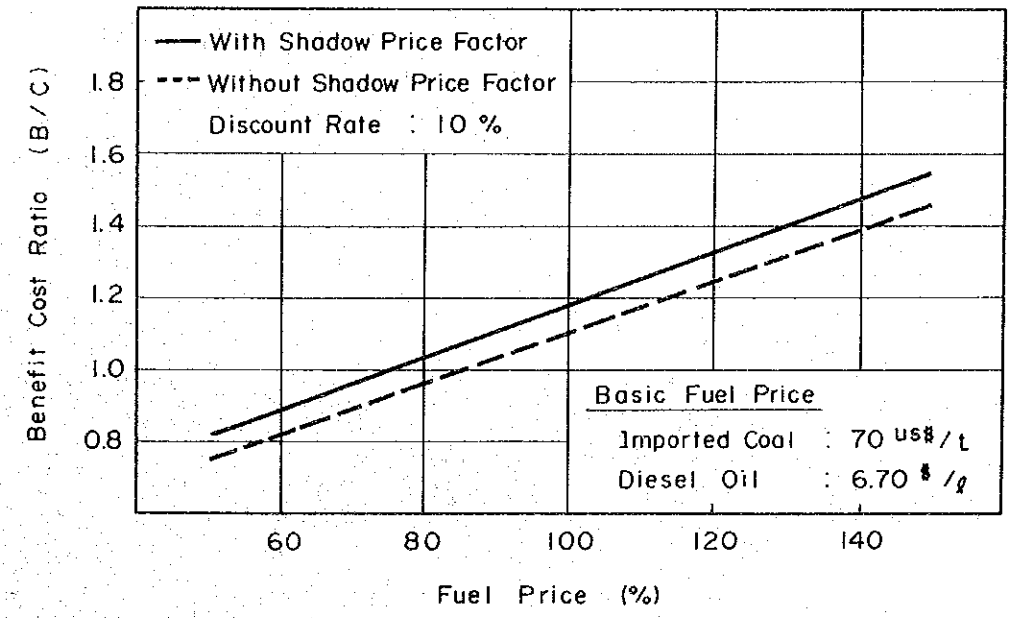

Fig. 10-3 Sensitivity Analysis

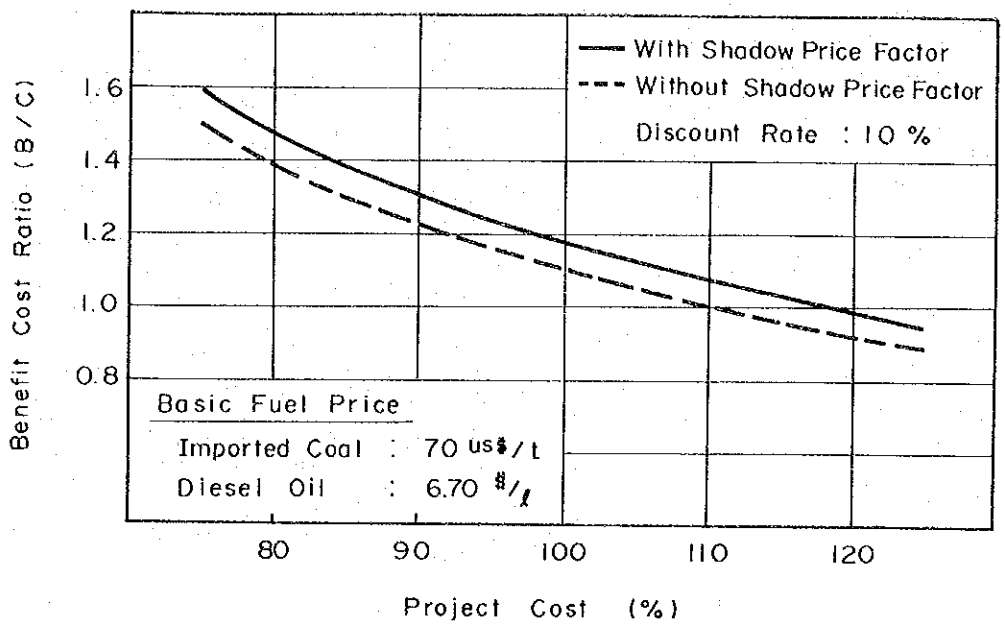

Fig. 10-4 Sensitivity Analysis

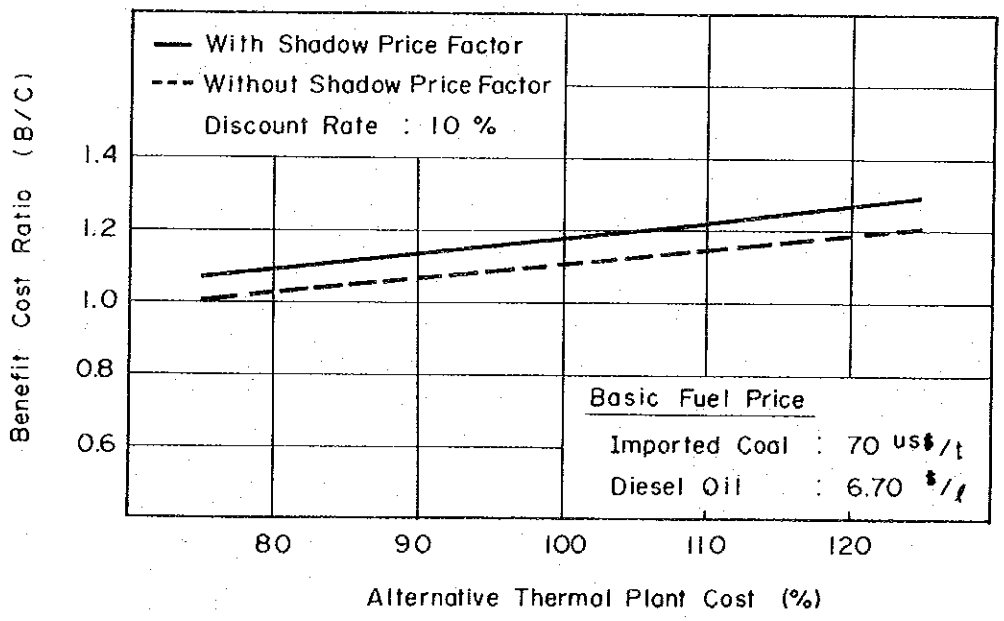

CHAPTER 11. IMPACT ON ENVIRONMENT

As development is practiced in large scale nowadays, more attention is being paid world-widely at its impact on environment.

In the beginning age, the attention was given to the harmful impact on environment by large-sized development and to the incongruency between development and preservation of environment. Nowadays however, the awareness is more dominant that both can and should go in harmony.

Generally, there are various types of impacts on environment by development, and the investigation and evaluations thereof require enormous amount of labor and time. Also, the methods for investigation and evaluation do not seem to be well-systematized yet. Basically, to deal with environment problem, works of the following types are to be included; full recognition of present conditions with the help of enough data and information, sufficient understanding of aims and methodology of the project in question, and then evaluation and judgement of the impact anticipated due to the project implementation based on the collected data. Harmful impact, if any, should be coped with by appropriate measures, and the impact, resulted from the measures should also be evaluated. In cases when any change in project is necessary, evaluation of technical and economic availability for the change should be practiced. Taking all the works to be done as a whole, the possibility of the project is judged.

Investigation and evaluation of impacts of Nam Yuam project on environment are not included in the scope of this F.S.. At any rate, according to various references domestic and foreign, the followings are the points that are usually to be considered on, in those cases when development includes large-scaled dams and reservoir construction.

1) Geophysical Impact
   (i) Erosion
   (ii) Suspended and Bed Load, and Sedimentation
   (iii) Flood
   (iv) Slope Stability
   (v) Groundwater
   (vi) Induced Earthquake

2) Impact on Water
   (i) Physical, Chemical Features
   (ii) Temperature
   (iii) Turbidity
   (iv) River Flow and Water Table
   (v) Water Loss
   (vi) Evaporation

3) Impact on Flora and Fauna
   (i) Forest
   (ii) Fish
   (iii) Mammals, Birds, Insects, Reptiles and Amphibia
   (iv) Precious Species
   (v) Phyto and Zooplankton

4) Compensation and Resettlement
   (i) Land Acquisition
   (ii) Resettlement
   (iii) Compensation

5) Social and Economic Impact
   (i) Employment
   (ii) Income and Expense
   (iii) Population and Industrial Structure
   (iv) Transportation and Communication
   (v) Scenery, Tourism and Recleation
   (vi) Public Health and Sanitary

6) Archeology

JICA