APPENDIX 4

ALCOGAS PROGRAM

IMMEDIATE PROGRAM

- ANHYDROUS ALCOHOL 99.5%
- BLENDED WITH REGULAR AND PREMIUM GASOLINE
  MAX. 15% ALCOHOL BY 1985
- BASIC RAW MATERIALS
  - SUGAR CANE
  - CASSAVA
  - SWEET POTATO, SWEET SORGHUM, CORN, ETC.
- BLENDING AT BULK PLANTS OF OIL COMPANIES
- EXPECTED DATE TO ATTAIN 15% BLEND 1985

FUTURE PROGRAM

- HYDROUS ALCOHOL FOR 100% ALCOHOL ENGINES
- ETHANOL AS CHEMICAL FEEDSTOCK

1. PHILIPPINE SUGAR CANE:

1 Hectare	=	40 - 60 MT Sugar Cane
1 MT Cane	=	1.4 - 1.6 Piculs Raw Sugar (1 Picul = 63.25 Kg)
1 MT Cane	=	.03 - .05 MT Molasses
1 MT Cane	=	60 - 70 Liters Alcohol
Harvesting Season	=	7 Mos.

2. CASSAVA

1 Hectare	=	20 - 30 MT Cassava
1 MT	=	140 Liters Min.
Harvesting Season	=	9 - 10 Mos.

Alcohol Pricing Policy

For the start-up year, 1980, the alcohol base price is established at ₱4.225 per liter . This cost consists of:

fixed cost (₱0.714/li), Raw Material Cost (₱2.827/ li), variable cost (₱0.30/li), and 10% Mark-Up (₱.384/ li).

Thereafter, the alcohol price will be increased in increments equivalent to 50% of the price adjustments in gasoline, net of adjustments in taxes, duties and other government imposts. If, however, this adjustment at anytime is not considered sufficient to cover actual increases in cost of production, the Commission will ensure that alcohol prices are correspondingly adjusted.

II. ALCOHOL DISTILLERIES

Alcohol requirements of the ALCOGAS Program will be produced from three basic models of distilleries.

MODEL I - Small Annexed Distilleries

Existing or new distilleries annexed to existing suqar centrals, capacities ranging from 30,000 to 60,000 liters per day.

OBJECTIVES: Immediate Implementation
Open opportunities for existing sugar centrals

MODEL II - Large Annexed or Autonomous Distilleries

Large annexed or autonomous distilleries with capacity size of 120,000 - 240,000 liters per day.

OBJECTIVE: Supply major demand areas such as METRO MANILA.

MODEL III - Autonomous Municipal Distilleries

Autonomous distilleries with capacities ranging from 30,000 to 60,000 liters per day.

OBJECTIVE: Supply regional local area requirements.

ATTACHMENT I

Guidelines for Locating Alcohol Projects

1. Areas and Sugar Districts approved for alcohol production:

   - Piat, Cagayan
   - Tolong, Negros Oriental
   - Pili, Camarines Sur
   - Botolan, Zambales
   - Mabinay, Negros Oriental
   - Dasmariñas, Cavite
   - All of Mindanao except for areas within existing sugar districts in Bukidnon, Davao and Cotabato
   - Canlubang, Laguna
   - Bamban, Tarlac
   - La Carlota, Negros Occidental
   - Bogo-Medellin, Cebu
   - Danao, Cebu
   - Pilar, Capiz
   - Davao del Sur
   - Clark Field Area (portion which has been turned over by the U.S. to the Philippine government)

2. All other areas are open for sugar cane, cassava, or sweet potato based alcohol projects except those that are definitely programmed for food production.

JUSTIFICATION FOR SMALL DISTILLERIES

1. Provide Improvement on the Economic Base of Rural Areas

   - Creation of Employment
   - Additional Income Opportunities to In-Situ Farmers

2. Organize small farmers into stronger economic units.

3. Diversification of sources of raw materials and production centers.

4. Immediate implementation can be easier attained with the participation of small farmers.

5. Extend economic opportunities to more lower income level groups.

6. Simpler and more economical slop or stillage disposal.

7. Economics of scale will not adversely be disadvantageous to small distilleries because of simpler plant design.

POWER ALCOHOL PROGRAM

TARGET DISTILLERY CAPACITY AND ALCOHOL PRODUCTION

YEAR	MODEL I		MODEL II		MODEL III		TOTAL	
	UNITS	MML/Y	UNITS	MML/Y	UNITS	MML/Y	UNITS	MML/Y
1981	2	13.1	-	-	-	-	2	13.1
1982	7	52.5	-	-	-	-	7	52.5
1983	9	91.7	3	72.0	-	-	12	163.7
1984	9	118.5	3	81.6	1	9.0	13	209.1
1985	9	118.5	3	96.0	2	19.8	14	234.3

POWER ALCOHOL PROGRAM

PROJECTED ALCOHOL MIX IN GASOLINE

YEAR	ALCOHOL PRODUCTION		GASOLINE DEMAND	AVE. % ALCOHOL
	MML	MB	MB	IN GASOLINE
1981	13.1	82.4	10,187	0.8
1982	52.5	330.2	9,472	3.5
1983	163.7	1029.5	9,071	11.3
1984	209.1	1315.1	8,838	14.9
1985	234.3	1473.6	8,661	17.0

1-19-81
/pvv

POWER ALCOHOL PROGRAM
1981 - 1985

INVESTMENT SUMMARY 1/
(MMP at 1981 Prices)

YEAR	MODEL I	MODEL II		MODEL III		TOTALS				
						ALCOHOL PRODUCTION FACILITIES		ALCOHOL LOGISTICAL FACILITIES		ANNUAL TOTALS
	DISTILLERY	DISTILLERY	AGRICULTURE	DISTILLERY	AGRICULTURE	DISTILLERY	AGRICULTURE	TANKS	BARGES	
1981	145.0	315.0	40.2	-	-	460.0	40.2	-	-	500.2
1982	100.0	-	-	95.0	30.7	195.0	30.7	9.2	11.0	245.9
1983	-	-	-	90.0	40.0	90.0	40.0	-	22.0	152.0
1984	-	-	-	-	-	-	-	-	11.0	11.00
1985	-	-	-	-	-	-	-	-	-	-
	245.0	315.0	40.2	185	70.7	745.0	110.9	9.2	44.0	909.1

NOTE: DISTILLERY AND AGRICULTURAL INVESTMENTS ARE RECORDED IN THE YEAR OF START OF CONSTRUCTION AND FARM DEVELOPMENT.

GRAND TOTAL ₱ 909.1 MILLION

FUNCTIONS OF THE PHILIPPINE NATIONAL ALCOHOL COMMISSION

I. OVER-ALL PROGRAM MANAGEMENT AND SUPERVISION

2. POLICY DEFINITION

3. AGRO-INDUSTRIAL TECHNOLOGY EXTENSION PROGRAM

4. INCENTIVES, GUARANTEES AND FINANCING

5. SET ALCOHOL PRICING, FEEDSTOCK PRICING AND TAX/SUBSIDY LEVELS

6. R & D: AGRICULTURE - ACTIVE, LOCAL APPLICATIONS
   INDUSTRIAL - MONITORING AND ASSESSMENT

7. INDUSTRY REGULATIONS AND CONTROLS

INCENTIVES

Agricultural and Alcohol Processing Investors

- °Assurance of basic rights and guarantees under the constitution.
- °Freedom from expropriation of property
- °Capital gains tax exemption
- °Tax allowance on investments
- °Tax exemption on sale of tax dividends
- °Access to GSIS/SSS loans for members investing in share of stocks.

Registered Enterprises in Agricultural and and Alcohol Processing

1. Major incentives

- °Deduction of pre-operating expenses
- °Accelerated depreciation
- °Net operating loss carry over
- °Tax exemption on imported capital equipment
- °Tax credit for withholding tax on interest
- °Deduction for expansion reinvestments
- °Exemption from government taxes (except income tax) on a graduated basis.
- °Deduction of labor training expense
- °Preference in government loans
- °Access to private financial assistance
- °Deduction of research and development expenses

2. Other Incentives

- °Anti-dumping protection
- °Protection from government competition
- °Post-operative tariff protection
- °Exemption from minimum 10% compensating tax on imported capital equipment.

AGRICULTURAL FINANCING

I. LOANS FOR RAW LAND DEVELOPMENT

- SUBJECT TO NEEDS AS ASSESSED BY DBP
- 10 YRS. MAX.
- 16 - 18%
- 2 - 3 YEARS GRACE

II. CROP LOANS

EXISTING LOAN PROGRAMS FROM

- PNB, DBP, RPB, ETC. FOR CASSAVA AND SUGAR CANE

PHILIPPINE NATIONAL ALCOHOL COMMISSION

Policies and Guidelines for the Alcogas Program Implementation

1. Anhydrous alcohol will be produced for blending with gasoline up to maximum level of 15%.

2. Projects utilizing sugar cane feedstocks will be accorded first priority in view of the wealth of local agricultural experience on this crop and the established processing technology for the raw material. The development of cassava and sweet potato as feedstock for alcohol distilleries will be given immediate emphasis. Proponents with proven agricultural experience in the farming of these crops will be encouraged to participate.

3. The Philippine Sugar Commission will approve the use of existing sugar cane areas for the ALCOGAS Program (Attachment I).

4. Alcohol from large distilleries (100 kl/day as higher) will be channeled as much as practicable to the Metro Manila motor fuel market, while that from smaller sized distilleries will be utilized to meet regional or provincial needs.

5. Alcohol projects registered under the Fuel Alcohol Program will be given pioneer status by the Board of Investments under the Energy Priorities Program.

6. Upon approval of, and registration with the Board of Investments of an alcohol project, the Philippine National Oil Company shall enter into an Alcohol Purchase Agreement with the participating distillery. PNOC will subsequently allocate alcohol to the Oil Companies for blending with gasoline and distribution to consumers.

7. The buying price for alcohol shall be determined in accordance with the Alcohol Pricing Policy and approved by the Board of Commissioners of the National Alcohol Commission

8. Alcohol projects shall have to meet minimum project criteria as established by the Commission

PROJECT CRITERIA

The general criteria to be met by project proponents are as follows:

1. Alcohol plants shall have to conform with accepted investment guidelines before government shall finance or guarantee foreign loans of the project.
2. A minimum portion of the plant equipment shall be locally fabricated or manufactured, equivalent to at least 50% of the total installed equipment cost.
3. Alcohol distilleries shall have to meet minimum production performance standards with regard to juice extraction efficiency, alcohol recovery, steam consumption and alcohol purity, as set by the National Alcohol Commission.
4. Alcohol distilleries shall have a guaranteed supply for 50% of its annual raw material requirements either from its own farm or through a supply contract with other parties.
5. Alcohol distilleries shall not use petroleum based fuels in the production of alcohol.
6. Distilleries have to conform with the environmental standards set by the National Pollution Control Commission.

MINIMUM PRODUCTION PERFORMANCE STANDARDS

-	CRUSHING & MILLING	94% Extraction Efficiency (Sugar Cane)
-	FERMENTATION & DISTILLATION	° 265 liters per ton (molasses)[1] 2 ° 67 liters per ton (sugar cane) ° 160 liters per ton (cassava/sweet 3 potato)
-	STEAM REQUIREMENTS	Maximum utilization of 5 kgs. of steam per liter of alcohol produced; covering the milling, fermentation and distillation process requirements.
-	ALCOHOL	99.5% purity

Note:

1 - corrected to 55% total sugars

2 - corrected to 12% sucrose content

3 - corrected to 25% starch content

APPENDIX 5

Drawing Material Balance (48 kl/d Case)

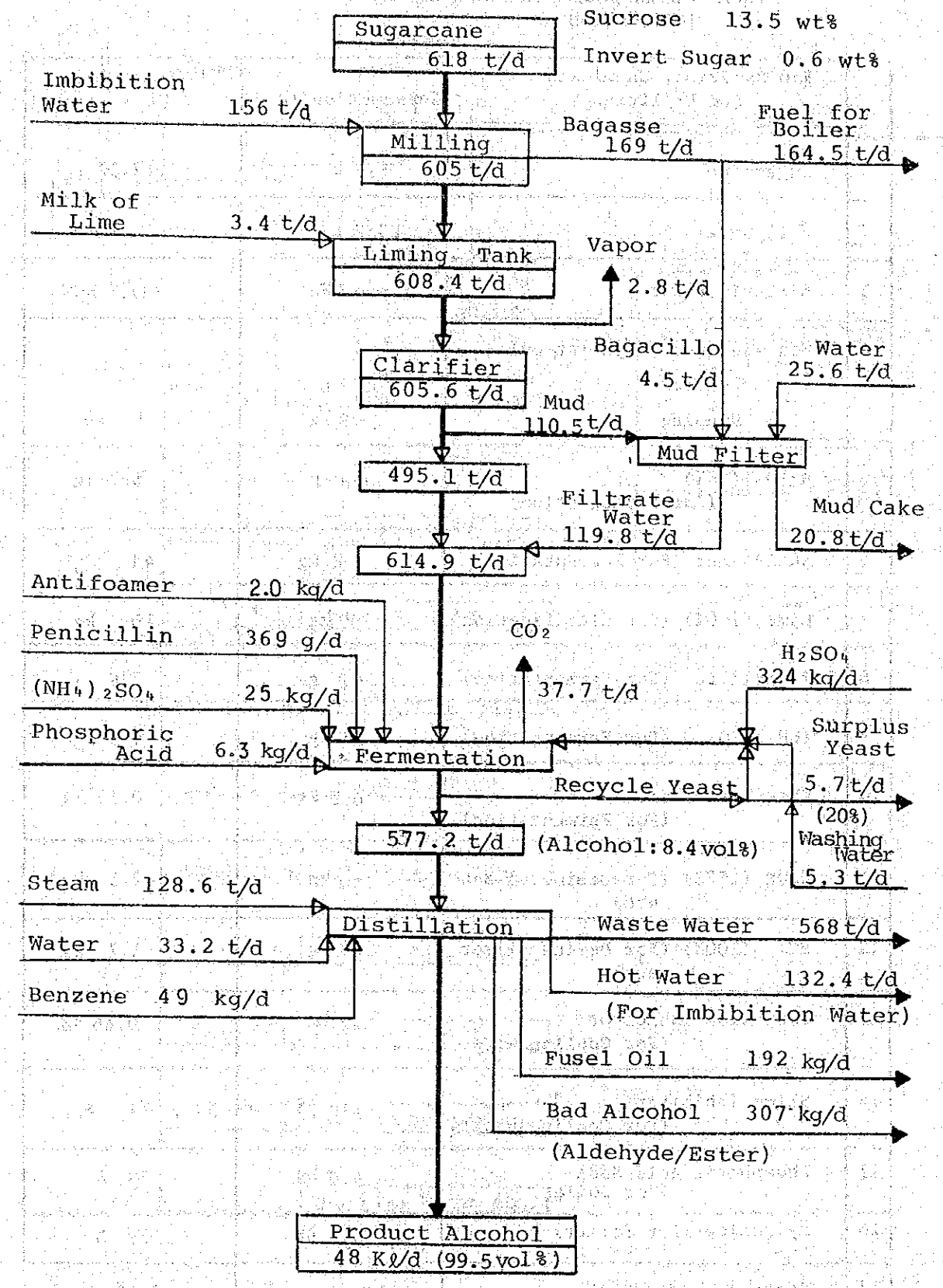

Table Consumption of Raw Material, Chemicals and Utilities
(48 kl/d Case)

	Raw Material, Chemicals and Utilities	Consumption /d	Consumption / Kℓ – Alcohol
1	Sugarcane	618 t	12.87 t
2	Well Water	2352 t	49 t
3	Electric Power	16200 KWH	337.5 KWH
4	Benzene (For Distillation) Initial Running	 2.8 t 49 kg	 1 kg
5	H_2SO_4 (98%) (For Fermentation)	324 kg	6.7 kg
6	Antifoamer (For Fermentation)	2 kg	41 g
7	Lime (100%) (For Clarification)	490 kg	10 kg
8	Penicillin (For Fermentation)	369 g	7.6 g
9	$(NH_4)_2SO_4$ (For Fermentation)	25 kg	0.5 kg
10	Phosphoric Acid (For Fermentation)	6.3 kg	0.13 kg
11	NaOH (100%) (For Demineralizer etc)	120 kg	2.5 kg
12	HCℓ (100%) (For Demineralizer etc)	80 kg	1.7 kg
13	Corrosion Inhibitor (For Cooling Water)	22 kg	0.46 kg
14	Slime Inhibitor (For Cooling Water)	1.0 kg	21 g
15	Phosphoric Acid Soda (For Boiler)	4.0 kg	83 g
16	Hydrazine (For Boiler)	5.9 kg	123 g
17	Bagasse (For Fuel)	164.5 t	3.43 t

Drawing Water Balance (48 kl/d Case)

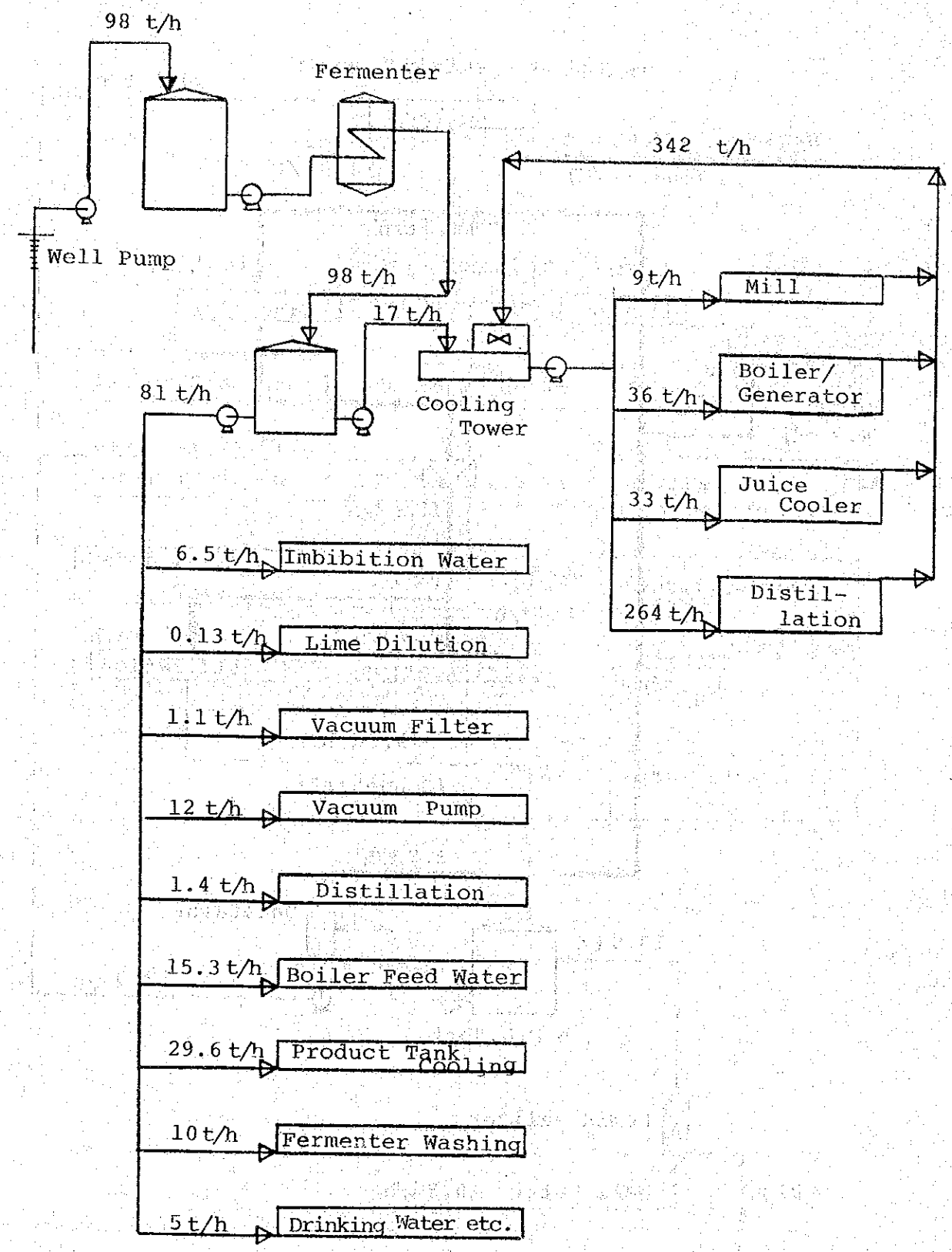

Drawing Steam Balance (48 kl/d Case)

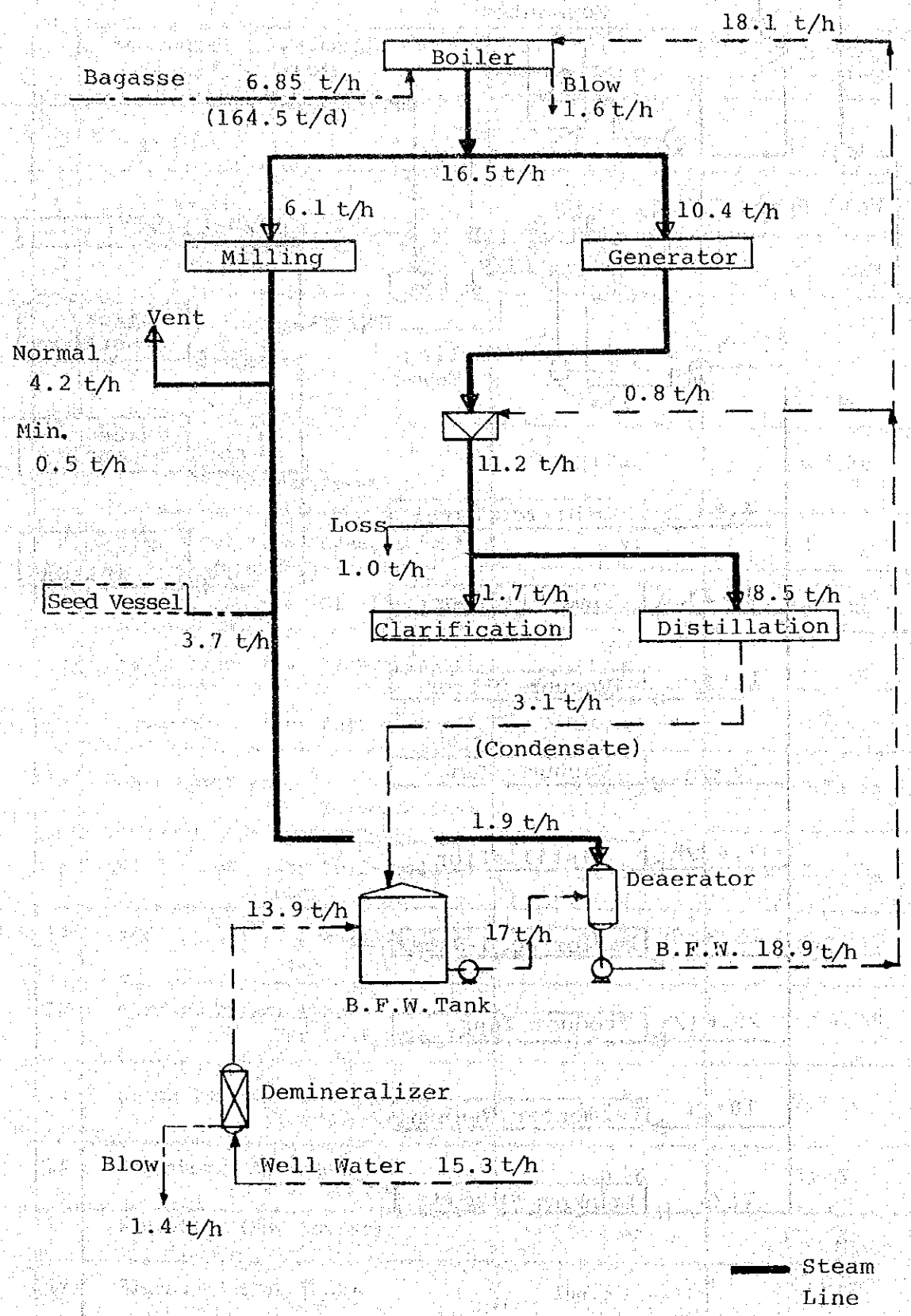

Drawing Power Balance (48 kl/d Case)

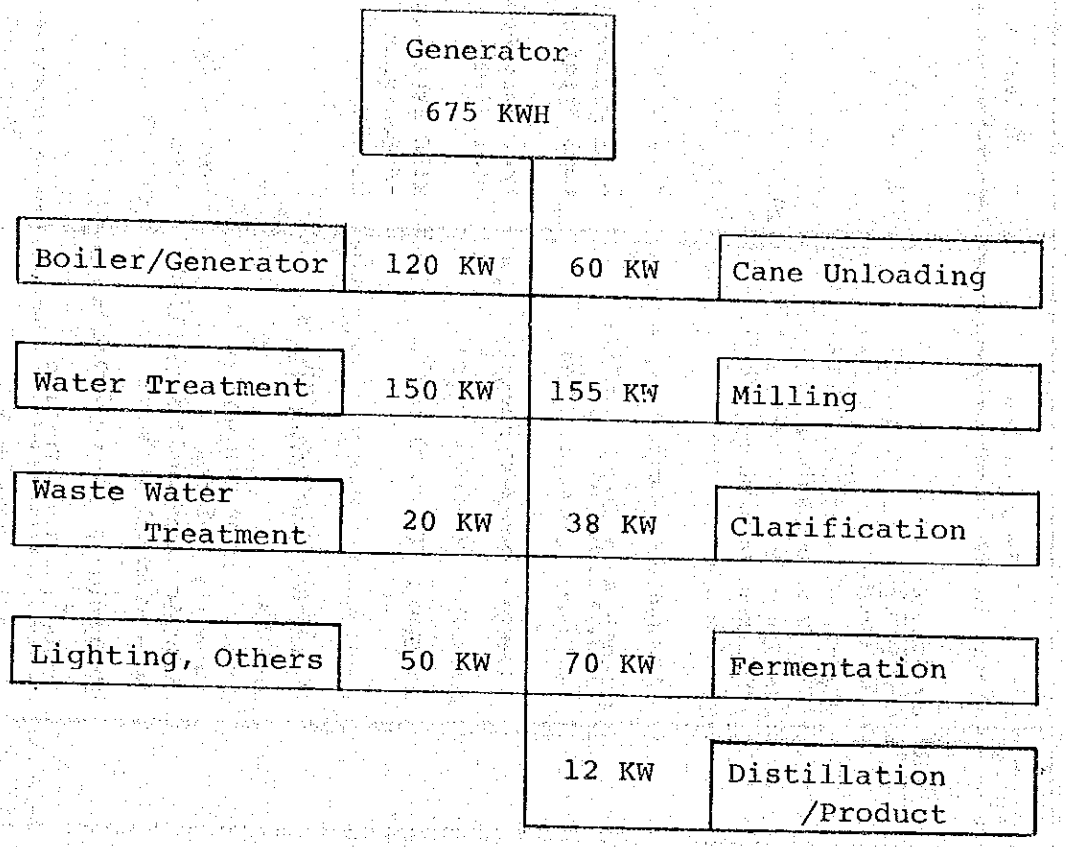

Table Main Equipment List (1/14)
(48 kl/d Case)

Equip. No.	Name	Q'ty Normal	Q'ty Spare	Description	Material	Remarks
	Raw Material Receiving, Storage and Milling Section					
W-101	Truck Scale	2		30t Scale		
M-101	Crane	2		20t Cane Unloading		25kW
M-102	Travelling Crane	1		20t Cane Unloading, Mill-Repair		56.3kW
M-103	Cane Feed Table	1		3500W×6000L 6m/min.	Mild Steel	11 kW
M-104	First Cane Knives	1		1100ø×1180W 600 rpm	Face Hardened Tool Steel	45 kW
M-105	Second Cane Knives	1		1100ø×1180W 600 rpm	Face Hardened Tool Steel	45 kW
M-106	Cane Shredder	1		1000ø×1180W 1200 rpm	Mild Steel Coat-ed Tangsten Carbide	120 kW
M-107	Tramp Iron Separator	1		1200W DC 200V Rated Power 5.5 kW		
M-108	Cane Mill	1		Capacity 740 t/d 3 Roller type mill 610ø×1180ℓ Roller Speed 5 rpm Hydraulic pressure 220 t Drive : Steam Turbine	Special Cast-Iron	
M-109	Hydraulic Equipment	1		Accumulation, Control System		3.7kW

Table Main Equipment List (2/14)
(48 kl/d Case)

Equip. No.	Name	Q'ty Normal	Q'ty Spare	Description	Material	Remarks
M-110	Steam Turbine	2		Single Stage/Back Press. Type Rated Output, Speed: 350 HP, 4500 rpm	Cast Steel	
M-111	Primary Gear Reduction	2		Enclosed Double Reduction Gear Type Transmission Power 350 HP Input/Output Speed 4500/125rpm		
M-112	Secondary Gear Reduction	2		Open Gear Type Transmission Power 350HP Input/Output Speed 125/25 rpm	Cr-Mo alloy Steel	
M-113	Final Gear Reduction	2		Open Gear, Compound Type Transmission Power 350HP Input/Output Speed 25/5 rpm	Cr-Mo alloy steel	
C-101	Cane Carrier	1		1180W × 24m 8m/min	Mild Steel	11kW
C-102	Shredded Cane Elevator	1		1180W × 7.5m 20m/min	Mild Steel	3.7kW
C-103	Intermediate Carrier	3		Mill Shaft Driven 1180 W×4m		
C-104	Bagasse Elevating Conveyor	1		Paddle Type 900 W × 16m	Mild Steel	5.5kW
TK-101	Maceration Juice Tank	2		0.3m³ 1000ø × 450H	A167.G304	

Table Main Equipment List (3/14)
(48 kl/d Case)

Equip. No.	Name	Q'ty Normal	Q'ty Spare	Description	Material	Remarks
TK-102	Mixed Juice Tank	1		0.3m³ 1000ø × 450H	A167 G304	
TK-103	Screened Juice Tank	1		1.0m³ 1100 ø × 1100H	A167 G304	
S-101	Juice Screen	1		900 W × 1500L × 0.7ø mesh	A167 G304	
P-101	Maceration Juice Pump	2	1	18m³/h × 7 mH	Stainless Steel	1.5 kW
P-102	Maceration Juice Pump	1	1	36m³/h × 12 mH	Stainless Steel	3.7 kW
P-103	Screened Juice Pump	1	1	36 m³/h × 15 mH	Stainless Steel	3.7 kW
	Boiler and Electric Generator Section					
Bo-201	Boiler	1 set		Capacity : 22t/h × 21.5kg/m² G Superheater Outlet Temp. 360°C		
E-201	Air Preheater	1		650 m²		
E-202	Steam Superheater	1		80m²		
E-203	Desuperheater	1		Water Spray Type		
E-204	Oil Heater	1				
D-201	Deaerator	1		Capacity : 22 t/h		

Table Main Equipment List (4/14)
(48 kl/d Case)

Equip. No.	Name	Q'ty Normal	Q'ty Spare	Description	Material	Remarks
B-201	No.1 FDF	1		500 m^3/min × 230 mmH_2O		40 kW
B-202	No.2 FDF	1		150 m^3/min × 220 mmH_2O		11 kW
B-203	IDF	1		1400 m^3/min × -220 mmH_2O		100 kW
P-201	D-201 Feed Pump	1	1	22 m^3/h × 30 mH		5.5kW
P-202	B.F.W Pump	1	1	22 m^3/h × 260 mH		45 kW
P-203	Oil Feed Pump	1	1			1.5kW
P-204	Chemical Feeder (H.P)	1		110 cc/min × 30 kg/m^2G		0.2kW
P-205	Chemical Feeder (L.P)	1				0.1kW
P-206	Oil Pump (For G201)	1				3.7kW
C-201	Bagasse Carrier	1		Double Deck Type		5.5kW
C-202	Bagasse Feeder	3		Screw Feeder		1.5kW
C-203	Return Conveyor	1		Single Deck Type		5.5kW
C-204	Ash Conveyor	1		Flight type		1.5kW
C-205	Dust Conveyor	1		Flight type		1.5kW
C-206	Ash Transfer Conveyor	1		Flight type		1.5kW
C-207	Dust Collector	1		Multi-Cyclone type		

Table Main Equipment List (5/14)
(48 kl/d Case)

Equip. No.	Name	Q'ty Normal	Q'ty Spare	Description	Material	Remarks
H-201	Ash Banker	1		8 m^3		
M-201	Seal Damper	2				0.2kW
TK-201	Fuel Oil Tank (Start up)	1				
G-201	Electric Generator	1		Generator Type : Revolving field, Pole Brashless Type Synchronous Generator Capacity: 67.5 kWH, 440V, 60 Hz, 3 phase Turbine Type : Back-pressure turbine with Reduction Gear Steam : 10.4 t/h × 20 kg/m^2G × 350°C		
Gs-201	Diesel Generator	1		Capacity 240 kWH, 440V, 60 Hz, 3 phase.		
Bc-201	Air Compressor	1	1	Oil-free Baby Compressor		3.7 kW
S-201	Stack	1				

Table Main Equipment List (6/14)
(48 kl/d Case)

Equip. No.	Name	Q'ty Normal	Q'ty Spare	Description	Material	Remarks
	Clarification Section					
M-301	Juice Scale	1		32 t/h Load Cell Type	A167 G304/ Mild steel	
TK-301	Weighed Juice Tank	1		6 m^3, 1700W× 2300L × 1800H	Mild Steel	Mixer 2.2kW
TK-302	Clarified Juice Tank	1		6.5 m^3, 1700W× 2700L × 1800H	Mild Steel	
TK-303	Sludge Tank	1		2.5 m^3, 1500$^{\phi}$ × 1500H	Mild Steel	Mixer 0.75kW
TK-304	Sludge Mix Tank	1		0.8 m^3, 500W× 2200L× 750H	Mild Steel	Mixer 1.5 kW
TK-305	Lime Milk Tank	2		4 m^3, 1600$^{\phi}$ × 2200H	Mild Steel	Mixer 1.5 kW
TK-306	Lime Dosing Apparatus	1		3ℓ, Head Tank	Mild Steel	
TK-307	F-301 Mud Washing Tank	1		0.6 m^3 900$^{\phi}$ × 1000H	Mild Steel	
TK-308	E-302 Washing Tank	1		8 m^3 1400W × 4300L × 1400H	Mild Steel	
E-301	Juice Preheater	1		Plate Type	Stainless Steel	
E-302	Juice Heater	3		70 m^2 Shell/Tube Type	Mild Steel/ Stainless Steel	
E-303	Juice Cooler	1		Plate Type	Stainless Steel	

Table Main Equipment List (7/14)
(48 kl/d Case)

Equip. No.	Name	Q'ty Normal	Q'ty Spare	Description	Material	Remarks
S-301	Clarifier	1		85 m^3 4300ø× 6100H	Mild Steel	0.75kW
S-302	Juice Screen	1		900W× 1500L	Stainless Steel	
S-303	Bagacillo Screen	1		1.6m^2 900W × 1800L	Stainless Steel	
F-301	Vacuum Filter	1		18 m^2 2440ø ×2750L	Stainless Steel (Drum)	3 kW
D-301	Flash Tank	1		950ø × 1300H	Mild Steel	
D-302	Cyclone Bagacillo Separator	1		700ø	Mild Steel	
D-303	Pickup Filtrate Receiver	1		670ø× 1500H	Mild Steel	
D-304	Wash Filtrate Receiver	1		670ø× 1500H	Mild Steel	
D-305	Condenser	1		670ø× 2100H	Mild Steel	
D-306	Condensate Receiver	1		1.2m^3 1100ø × 1300H	Mild Steel	
P-301	Weighed Juice Pump	1	1	30 m^3/h × 50 mH	Cast Iron/Bronze	11 kW
P-302	Clarified Juice Pump	1	1	30 m^3/h × 40 mH	Cast Iron/Bronze	7.5 kW
P-303	Lime Milk Pump	1	1	1m^3/h × 20 mH	Cast Steel	0.5 kW

Table Main Equipment List (8/14)
(48 kl/d Case)

Equip. No.	Name	Q'ty Normal	Q'ty Spare	Description	Material	Remarks
P-304	Mud Pump	1	1	6 m^3/h	Cast Steel	2.2kW
P-305	Liquidation Pump	1		30 m^3/h × 15 mH	Cast Iron/Bronze	2.2kW
P-306	Filtrate Pump	2	1	7.5 m^3/h × 15 mH	Cast Iron/Bronze	1.5kW
P-307	Vacuum Pump	1	1	6 m^3/min × -500 mmHg	Cast Iron	15 kW
P-308	Mud Recirculation Pump	1	1	7.5 m^3/h × 15 mH	Cast Iron/Bronze	1.5kW
P-309	Mud Washing Pump	1		5 m^3/h × 30 mH	Mild Steel	1.5kW
P-310	Condensate Pump	1		2.5 m^3/h × 20 mH	Cast Iron/Bronze	1.5kW
P-311	Caustic Soda Pump	1		12 m^3/h × 20 mH	Cast Iron	2.2kW
B-301	Exhauster	1		35 m^3/min × 250 mmH_2O	Mild Steel	3.7 kW
C-301	Cake Conveyor	1		1.2 t/h 250W × 7000 L		0.75kW
H-301	Cake Hopper	1		5 m^3 1800W × 1800L × 1600H	Mild Steel	
	Fermentation Section					
R-401	Pre Seed Vessel	1		200ℓ	Stainless Steel	
R-402	First Seed Vessel	1		1 m^3 1000ø × 1650H	Stainless Steel	Mixer 3.7kW
R-403	Second Seed Vessel	1		13 m^3 2300ø × 4000H	Stainless Steel	Mixer 11 kW

Table Main Equipment List (9/14)
(48 kl/d Case)

Equip. No.	Name	Q'ty Normal	Q'ty Spare	Description	Material	Remarks
R-404	Fermenter	6		130m³ 5000ϕ × 7000H	Mild Steel	
TK-401	Mash Buffer Tank	1		130m³ 5000ϕ × 7000H	Mild Steel	
TK-402	PH Adjusting Tank	2		43m³ 3800ϕ × 4300H	Mild Steel	Mixer 3.7kW
TK-403	H_2SO_4 Tank	1		8m³ 2200ϕ × 2200H	Stainless Steel	
TK-404	H_2SO_4 Head Tank	1		0.2 m³	Stainless Steel	
TK-405	Drain Tank	1		4 m³	Mild Steel	
S-401	Yeast Separator	2	1	32 m³/h	Stainless Steel	25 kW
P-401	R-404 BTM Pump	1	1	60 m³/h × 30 mH	Stainless Steel	11 kW
P-402	Mash Pump	1	1	28 m³/h × 60 mH	Stainless Steel	11 kW
P-403	Drain Pump	1		8 m³/h × 15 mH	Stainless Steel	1.5kW
P-404	H_2SO_4 Pump	1		2 m³/h × 20 mH	Stainless Steel	0.4kW
Bc-401	Air Compressor	1		1.6 m³/min × 7 kg/cm²G		11 kW
AF-401	Air Filter	1		1.6m³/min	Mild Steel	
F-401	Mash Filter	2		60 m³/h Backet Type 40 mesh	Stainless Steel	

Table Main Equipment List (10/14)
(48 kl/d Case)

Equip. No.	Name	Q'ty Normal	Q'ty Spare	Description	Material	Remarks
Bp-401	Belt Press	1		$0.8m^3/h$	Mild Steel	3.9kW
	Distillation Section					
C-501	Mash Column	1		$1040^{\phi}/1320^{\phi}/1550^{\phi} \times 24000H$	Stainless Steel	Bubble Cap Tray
C-502	Rectifying Column	1		$1800^{\phi} \times 29000H$	Stainless Steel	Bubble Cap Tray
C-503	Dehydration Column	1		$1600^{\phi} \times 28000H$	Stainless Steel	Sieve Tray
C-504	Beuzene Recovery Column	1		$540^{\phi} \times 12000H$	Stainless Steel	Sieve Tray
D-501	Fuel Oil Separator	1		$530^{\phi} \times 2800H$	Stainless Steel	
D-502	Benzene Separator	1		$1400^{\phi} \times 4700L$	Stainless Steel	
D-503	Benzene Measuring Drum	1		$280^{\phi} \times 380H$	Stainless Steel	
D-504	Drain Separator	1		$2.5m^3$	Mild Steel	
E-501	C-502 OVHD Condenser	1		$160m^2$ Shell/Tube Type	S.S/S.S	S.S: Stainless Steel
E-502	Waste Effluent H/E	2		$56m^2$ Shell/Tube Type	S.S/S.S	
E-503	C-503 Reboiler	1		$64m^2$ Shell/Tube Type	C.S/S.S	C.S: Carbon steel

Table Main Equipment List (11/14)
(48 kl/d Case)

Equip. No.	Name	Q'ty Normal	Q'ty Spare	Description	Material	Remarks
E-504	Product Cooler	1		16 m^2 Shell/Tube Type	C.S/S.S	C.S: Carbon steel
E-505	C-501 OVHD Condenser	1		9 m^2 Shell/Tube Type	C.S/S.S	
E-506	C-501 OVHD Condenser	1		36 m^2 Shell/Tube Type	C.S/S.S	
E-507	C-502 OVHD Condenser	1		56 m^2 Shell/Tube Type	C.S/S.S	
E-508	C-502 OVHD Condenser	1		54 m^2 Shell/Tube Type	C.S/S.S	
E-509	C-503 OVHD Condenser	1		136 m^2 Shell/Tube Type	C.S/S.S	
E-510	C-503 OVHD Condenser	1		56 m^2 Shell/Tube Type	C.S/S.S	
E-511	C-504 OVHD Condenser	1		16 m^2 Shell/Tube Type	C.S/S.S	
E-512	By Product Cooler	1		0.6 m^2 Shell/Tube Type	C.S/S.S	
E-513	C-502 Waste Water Cooler	1		10 m^2 Shell/Tube Type	C.S/S.S	
TK-501	Benzene Tank	1		1850ϕ × 1900H	Stainless Steel	
TK-502	Bad Alcohol Middle Tank	1		2.2 m^3 1300ϕ × 1700H	Stainless Steel	
TK-503	Fuel Oil Tank	1		16 m^3 2700ϕ × 3000H	Mild Steel	
TK-504	Bad Alcohol Tank	1		24 m^3 3000ϕ × 3500H	Mild Steel	
TK-505	Waste Water Tank	1		7 m^3	Mild Steel	
TK-506	Waste Water Tank	1		4 m^3	Mild Steel	

Table Main Equipment List (12/14)
(48 kl/d Case)

Equip. No.	Name	Q'ty Normal	Q'ty Spare	Description	Material	Remarks
TK-507	E-503 Condensate Tank	1		$4m^3$	Mild Steel	
P-501	Product Pump	1	1	$2.4m^3/h \times 40$ mH	Stainless Steel	3.7kW
P-502	C-501 BTM Pump	1	1	$28\ m^3/h \times 15$ mH	Stainless Steel	2.2kW
P-503	C-502 BTM Pump	1	1	$6.4m^3/h \times 20$ mH	Cast Iron	1.5kW
P-504	E-503 Condensate Pump	1	1	$4\ m^3/h \times 20$ mH	Cast Iron	1.5kW
P-505	Benzene Feed Pump	1		$50\ \ell/h \times 40$ mH	Stainless Steel	0.4kW
P-506	Fusel Oil Pump	1		$4\ m^3/h \times 10$ mH	Cast Iron	0.75kW
P-507	Bad Alcohol Pump	1		$4\ m^3/h \times 10$ mH	Cast Iron	0.75kW
	Product Storage and Loading Section					
TK-601	Alcohol Storage Tank	2		$800\ m^3$ $10620^{\phi} \times 9660H$	Mild Steel	
P-601	Product Pump	1	1	$10\ m^3/h \times 10$ mH	Stainless Steel	0.75kW
	Water Treatment Section					
TK-701	Well Water Tank	1		$120\ m^3$	Mild Steel	
TK-702	Water Supply Tank	1		$120\ m^3$	Mild Steel	
TK-703	Pure Water Tank	1		$48\ m^3$	Mild Steel	

Table Main Equipment List (13/14)
(48 kl/d Case)

Equip. No.	Name	Q'ty Normal	Q'ty Spare	Description	Material	Remarks
TK-704	B.F.W Tank	1		80 m^3	Mild Steel	
TK-705	Imbibition Water Tank	1		40m^3	Mild Steel	
CT-701	Cooling Tower	1		Capacity : 400m^3/h		25 kW
PT-701	CT-701 Pit	1		80 m^3	R.C	
Bc-701	Air Compressor	1				7.5kW
D-701	Demineralizer	1 set		Capacity : 22 t/h		10 kW
P-701	Well Pump	2		60 m^3/h × 150 mH	Cast Iron	37 kW
P-702	Fermenter Cooling Pump	1	1	120 m^3/h × 20 mH	Cast Iron	11 kW
P-703	PT-701, TK-703 Feed Pump	1	1	40 m^3/h × 15 mH	Cast Iron	3.7kW
P-704	Process Water Pump	1	1	11 m^3/h × 50 mH	Cast Iron	5.5kW
P-705	I/W Pump	1	1	60 m^3/h × 20 mH	Cast Iron	5.5kW
P-706	Pure Water Pump	1	1	22 m^3/h × 20 mH	Cast Iron	3.7kW
P-707	Imbibition Water Pump	1	1	8 m^3/h × 15 mH	Cast Iron	1.5kW
P-708	Cooling Water Pump	1	1	400 m^3/h × 50 mH	Cast Iron	75 kW

Table Main Equipment List (14/14)
(48 kl/d Case)

Equip. No.	Name	Q'ty Normal	Q'ty Spare	Description	Material	Remarks
	Waste Water Treatment Section					
P_T-801	Waste Water Pit	1		800 m^3	Earthen Pit	
P-801	Waste Water Pump	1	1	90 $m^3/h \times 50$ mH	Cast Iron	22 kW

Drawing Plot Plan (48 kl/d Case)

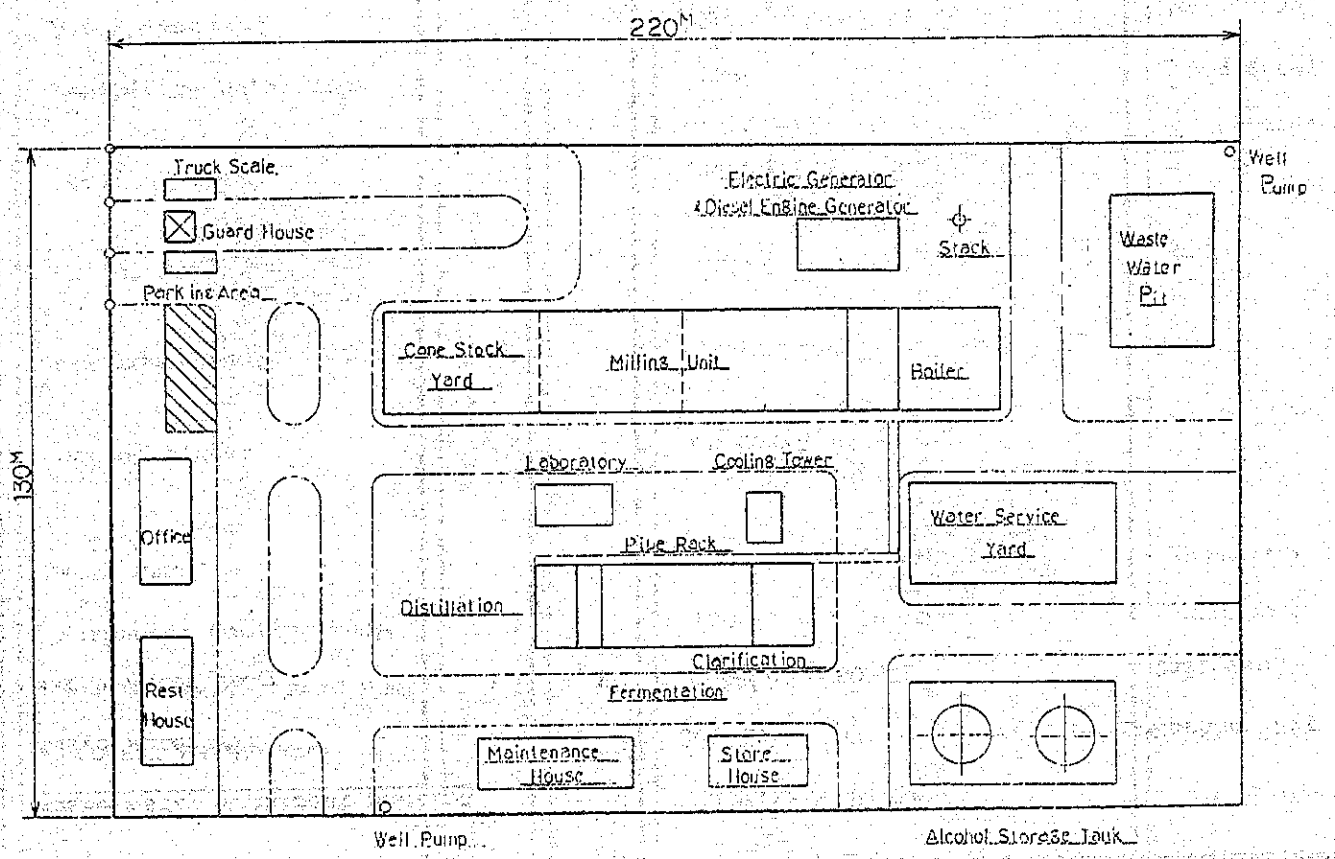

APPENDIX 6

*** COST ACCOUNTING ***

PAGE (1- 1)

PROJECT NAME : ALCOGAS PROJ. P+E 8
CASE NO : 48.0KL/D

CURRENCY UNIT : 1000 PESO
QUANTITY UNIT : KL & TON

DATE 82. 1.31

	(1)	(2)	(3)	(4)	(5)	(6)	(7)	(8)	(9)	(10)
MATERIALS	0.	0.	0.	0.	14646.	21548.	22886.	23806.	24179.	24179.
VARIABLE COST (1)	0.	0.	0.	0.	1058.	1421.	1491.	1539.	1559.	1559.
FIXED COST (1)	0.	0.	0.	0.	17146.	17696.	17666.	17563.	17427.	17290.
OTHER EXPENSE (1)	0.	0.	0.	1854.	0.	0.	0.	0.	0.	0.
DEPRECIATION	0.	0.	0.	0.	18254.	18990.	18990.	18990.	17603.	17182.
PRODUCTION COST	0.	0.	0.	1854.	51104.	59655.	61033.	61898.	60768.	60210.
UNIT COST	.000	.000	.000	.000	7.821	6.822	6.616	6.507	6.324	6.266

*** PROFIT & LOSS STATEMENT ***

	(1)	(2)	(3)	(4)	(5)	(6)	(7)	(8)	(9)	(10)
SALES REVENUE	0.	0.	0.	0.	41813.	59543.	63438.	65775.	66540.	66590.
OTHER INCOME	0.	0.	4035.	14638.	0.	0.	0.	0.	0.	0.
COST OF GOOD SOLD	0.	0.	0.	1854.	47271.	59014.	60929.	61833.	60853.	60252.
INITIAL INVENTORY	0.	0.	0.	0.	0.	3833.	4474.	4577.	4642.	4558.
PRODUCTION COST	0.	0.	0.	1854.	51104.	59655.	61033.	61898.	60768.	60210.
FINAL INVENTORY	0.	0.	0.	0.	3833.	4474.	4577.	4642.	4558.	4516.
GROSS PROFIT ON SALES	0.	0.	4035.	12784.	-5458.	529.	2509.	3942.	5687.	6339.
OPERATING PROFIT	0.	0.	4035.	12784.	-5458.	529.	2509.	3942.	5687.	6339.
NON-OPERATING EXP.	0.	0.	0.	0.	1843.	12945.	12847.	12528.	11785.	10854.
INTEREST FOR L.T.L.	0.	0.	0.	0.	0.	11102.	11004.	10685.	9942.	9011.
INTEREST FOR S.T.L.	0.	0.	0.	0.	0.	0.	0.	0.	0.	0.
AMORTIZATION	0.	0.	0.	0.	1843.	1843.	1843.	1843.	1843.	1843.
NET PROFIT BEFORE TAX	0.	0.	4035.	12784.	-7301.	-12416.	-10338.	-8586.	-6097.	-4515.
INCOME TAX	0.	0.	1533.	4858.	0.	0.	0.	0.	0.	0.
NET PROFIT AFTER TAX	0.	0.	2502.	7926.	-7301.	-12416.	-10338.	-8586.	-6097.	-4515.
DIVIDEND	0.	0.	0.	0.	0.	0.	0.	0.	0.	0.
RETAINED EARNINGS	0.	0.	2502.	7926.	-7301.	-12416.	-10338.	-8586.	-6097.	-4515.
CUMULATIVE	0.	0.	2502.	10428.	3127.	-9289.	-19627.	-28213.	-34310.	-38825.

*** COST ACCOUNTING ***

PROJECT NAME : ALCOGAS PROJ. P+E 8
CASE NO : 48.0KL/D

CURRENCY UNIT : 1000 PESO
QUANTITY UNIT : KL & TON

DATE 82. 1.31

	(11)	(12)	(13)	(14)	(15)	(16)	(17)	(18)	(19)	(20)
MATERIALS	24179.	24179.	24179.	24179.	24179.	24179.	24179.	24179.	24179.	24179.
VARIABLE COST (1)	1559.	1559.	1559.	1559.	1559.	1559.	1559.	1559.	1559.	1559.
FIXED COST (1)	17153.	17016.	16879.	16727.	16592.	16473.	16368.	16275.	16191.	16117.
OTHER EXPENSE (1)	0.	0.	0.	0.	0.	0.	0.	0.	0.	0.
DEPRECIATION	17935.	18426.	5132.	4817.	1418.	1446.	1025.	1778.	2269.	2487.
PRODUCTION COST	60826.	61180.	47749.	47281.	43748.	43657.	43130.	43790.	44197.	44341.
UNIT COST	6.330	6.367	4.969	4.920	4.553	4.543	4.489	4.557	4.600	4.615

*** PROFIT & LOSS STATEMENT ***

	(11)	(12)	(13)	(14)	(15)	(16)	(17)	(18)	(19)	(20)
SALES REVENUE	66590.	66590.	66590.	66590.	66590.	66590.	66590.	66590.	66590.	66590.
OTHER INCOME	0.	0.	0.	0.	0.	0.	0.	0.	0.	0.
COST OF GOOD SOLD	60780.	61153.	48756.	47316.	44013.	43663.	43170.	43740.	44167.	44330.
INITIAL INVENTORY	4516.	4562.	4588.	3581.	3546.	3281.	3274.	3235.	3284.	3315.
PRODUCTION COST	60826.	61180.	47749.	47281.	43748.	43657.	43130.	43790.	44197.	44341.
FINAL INVENTORY	4562.	4588.	3581.	3546.	3281.	3274.	3235.	3284.	3315.	3326.
GROSS PROFIT ON SALES	5811.	5437.	17834.	19275.	22578.	22927.	23421.	22850.	22423.	22260.
OPERATING PROFIT	5811.	5437.	17834.	19275.	22578.	22927.	23421.	22850.	22423.	22260.
NON-OPERATING EXP.	9923.	8992.	6218.	5287.	4356.	3426.	2495.	1632.	799.	188.
INTEREST FOR L.T.L.	8080.	7149.	6218.	5287.	4356.	3426.	2495.	1632.	799.	188.
INTEREST FOR S.T.L.	0.	0.	0.	0.	0.	0.	0.	0.	0.	0.
AMORTIZATION	1843.	1843.	0.	0.	0.	0.	0.	0.	0.	0.
NET PROFIT BEFORE TAX	-4112.	-3555.	11616.	13987.	18221.	19501.	20926.	21218.	21624.	22072.
INCOME TAX	0.	0.	0.	0.	0.	2434.	7952.	8063.	8217.	8387.
NET PROFIT AFTER TAX	-4112.	-3555.	11616.	13987.	18221.	17067.	12974.	13155.	13407.	13685.
DIVIDEND	0.	0.	0.	0.	0.	0.	0.	0.	0.	0.
RETAINED EARNINGS	-4112.	-3555.	11616.	13987.	18221.	17067.	12974.	13155.	13407.	13685.
CUMULATIVE	-42938.	-46492.	-34876.	-20889.	-2668.	14399.	27374.	40529.	53936.	67621.

*** COST ACCOUNTING ***

PAGE (1- 3)

PROJECT NAME : ALCOGAS PROJ. P+E 8
CASE NO : 48.0KL/D

CURRENCY UNIT : 1000 PESO
QUANTITY UNIT : KL & TON

DATE 82. 1.31

	(21)	(22)	(23)	(24)
MATERIALS	24179.	24179.	24179.	24179.
VARIABLE COST (1)	1559.	1559.	1559.	1559.
FIXED COST (1)	16051.	15991.	15937.	15889.
OTHER EXPENSE (1)	0.	0.	0.	0.
DEPRECIATION	2171.	1418.	927.	191.
PRODUCTION COST	43959.	43147.	42602.	41817.
UNIT COST	4.575	4.490	4.434	4.352

*** PROFIT & LOSS STATEMENT ***

	(21)	(22)	(23)	(24)
SALES REVENUE	66590.	66590.	66590.	66590.
OTHER INCOME	0.	0.	0.	0.
COST OF GOOD SOLD	43988.	43208.	42643.	41876.
INITIAL INVENTORY	3326.	3297.	3236.	3195.
PRODUCTION COST	43959.	43147.	42602.	41817.
FINAL INVENTORY	3297.	3236.	3195.	3136.
GROSS PROFIT ON SALES	22602.	23383.	23947.	24715.
OPERATING PROFIT	22602.	23383.	23947.	24715.
NON-OPERATING EXP.	0.	0.	0.	0.
INTEREST FOR L.T.L.	0.	0.	0.	0.
INTEREST FOR S.T.L.	0.	0.	0.	0.
AMORTIZATION	0.	0.	0.	0.
NET PROFIT BEFORE TAX	22602.	23383.	23947.	24715.
INCOME TAX	8589.	8885.	9100.	9392.
NET PROFIT AFTER TAX	14013.	14497.	14847.	15323.
DIVIDEND	0.	0.	0.	0.
RETAINED EARNINGS	14013.	14497.	14847.	15323.
CUMULATIVE	81634.	96132.	110979.	126302.

*** CASH FLOW ***

PROJECT NAME : ALCOGAS PROJ. P+E 8
CASE NO : 48.0KL/D

CURRENCY UNIT : 1000 PESO
QUANTITY UNIT : KL & TON

DATE 82. 1.31

	(1)	(2)	(3)	(4)	(5)	(6)	(7)	(8)	(9)	(10)
SOURCE OF FUND										
SALES INCOME	0.	0.	0.	0.	40071.	58804.	63276.	65677.	66509.	66588.
OTHER INCOME	0.	0.	4035.	14638.	0.	0.	0.	0.	0.	0.
PAID UP CAPITAL	3390.	2063.	10984.	21884.	8222.	0.	0.	0.	0.	0.
LONG TERM LOAN	10170.	6190.	32952.	65650.	24667.	0.	0.	0.	0.	0.
SHORT TERM LOAN	0.	0.	0.	0.	0.	0.	0.	0.	0.	0.
OTHERS	0.	0.	0.	0.	0.	0.	0.	0.	0.	0.
TOTAL	13560.	8253.	47971.	102172.	72960.	58804.	63276.	65677.	66509.	66588.
APPLICATION OF FUND										
MATERIAL	0.	0.	0.	0.	14106.	21297.	22838.	23772.	24166.	24179.
VARIABLE COST	0.	0.	0.	0.	1058.	1421.	1491.	1539.	1559.	1559.
FIXED COST	0.	0.	0.	0.	17146.	17696.	17666.	17563.	17427.	17290.
OTHER EXPENSE	0.	0.	0.	1854.	0.	0.	0.	0.	0.	0.
INTEREST	0.	0.	0.	0.	0.	11102.	11004.	10685.	9942.	9011.
INVESTMENT	13560.	8253.	43937.	87533.	35069.	3273.	0.	0.	2304.	1402.
REPAYMENT OF L.T.L.	0.	0.	0.	0.	848.	1364.	4109.	9580.	11636.	11636.
REPAYMENT OF S.T.L.	0.	0.	0.	0.	0.	0.	0.	0.	0.	0.
INCOME TAX	0.	0.	0.	1533.	4858.	0.	0.	0.	0.	0.
DIVIDEND	0.	0.	0.	0.	0.	0.	0.	0.	0.	0.
TOTAL	13560.	8253.	43937.	90921.	73085.	56153.	57108.	63139.	67033.	65077.
CASH SURPLUS										
ANNUAL	0.	0.	4034.	11251.	-126.	2651.	6168.	2538.	-525.	1512.
CUMULATIVE	0.	0.	4034.	15286.	15160.	17811.	23979.	26518.	25993.	27505.

*** CASH FLOW ***

PROJECT NAME : ALCOGAS PROJ. P+E 8
CASE NO : 48.0KL/D

CURRENCY UNIT : 1000 PESO
QUANTITY UNIT : KL & TON

DATE 82. 1.31

	(11)	(12)	(13)	(14)	(15)	(16)	(17)	(18)	(19)	(20)
SOURCE OF FUND										
SALES INCOME	66590.	66590.	66590.	66590.	66590.	66590.	66590.	66590.	66590.	66590.
OTHER INCOME	0.	0.	0.	0.	0.	0.	0.	0.	0.	0.
PAID UP CAPITAL	0.	0.	0.	0.	0.	0.	0.	0.	0.	0.
LONG TERM LOAN	0.	0.	0.	0.	0.	0.	0.	0.	0.	0.
SHORT TERM LOAN	0.	0.	0.	0.	0.	0.	0.	0.	0.	0.
OTHERS	0.	0.	0.	0.	0.	0.	0.	0.	0.	0.
TOTAL	66590.	66590.	66590.	66590.	66590.	66590.	66590.	66590.	66590.	66590.
APPLICATION OF FUND										
MATERIAL	24179.	24179.	24179.	24179.	24179.	24179.	24179.	24179.	24179.	24179.
VARIABLE COST	1559.	1559.	1559.	1559.	1559.	1559.	1559.	1559.	1559.	1559.
FIXED COST	17153.	17016.	16879.	16727.	16592.	16473.	16368.	16275.	16191.	16117.
OTHER EXPENSE	0.	0.	0.	0.	0.	0.	0.	0.	0.	0.
INTEREST	8080.	7149.	6218.	5287.	4356.	3426.	2495.	1632.	799.	188.
INVESTMENT	3347.	2181.	3273.	0.	0.	2304.	1402.	3347.	2181.	3273.
REPAYMENT OF L.T.L.	11636.	11636.	11636.	11636.	11636.	11636.	10788.	10273.	7526.	2053.
REPAYMENT OF S.T.L.	0.	0.	0.	0.	0.	0.	0.	0.	0.	0.
INCOME TAX	0.	0.	0.	0.	0.	0.	2434.	7952.	8063.	8217.
DIVIDEND	0.	0.	0.	0.	0.	0.	0.	0.	0.	0.
TOTAL	65954.	63720.	63744.	59387.	58322.	59576.	59224.	65216.	60498.	55585.
CASH SURPLUS										
ANNUAL	637.	2871.	2847.	7203.	8268.	7014.	7366.	1375.	6092.	11005.
CUMULATIVE	28141.	31012.	33859.	41062.	49330.	56344.	63710.	65085.	71177.	82182.

*** CASH FLOW ***

PROJECT NAME : ALCOGAS PROJ. P+E &
CASE NO : 48.0KL/D

CURRENCY UNIT : 1000 PESO
QUANTITY UNIT : KL & TON

DATE 82. 1.31

	(21)	(22)	(23)	(24)
SOURCE OF FUND				
SALES INCOME	66590.	66590.	66590.	66590.
OTHER INCOME	0.	0.	0.	0.
PAID UP CAPITAL	0.	0.	0.	0.
LONG TERM LOAN	0.	0.	0.	0.
SHORT TERM LOAN	0.	0.	0.	0.
OTHERS	0.	0.	0.	0.
TOTAL	66590.	66590.	66590.	66590.
APPLICATION OF FUND				
MATERIAL	24179.	24179.	24179.	24179.
VARIABLE COST	1559.	1559.	1559.	1559.
FIXED COST	16051.	15991.	15937.	15889.
OTHER EXPENSE	0.	0.	0.	0.
INTEREST	0.	0.	0.	0.
INVESTMENT	0.	0.	0.	-27402.
REPAYMENT OF L.T.L.	0.	0.	0.	0.
REPAYMENT OF S.T.L.	0.	0.	0.	0.
INCOME TAX	8387.	8589.	8885.	9100.
DIVIDEND	0.	0.	0.	0.
TOTAL	50176.	50317.	50560.	23324.
CASH SURPLUS				
ANNUAL	16415.	16273.	16030.	43266.
CUMULATIVE	98597.	114870.	130900.	174166.

*** DISCOUNTED CASH FLOW LIST FOR ROI ***

	(1)	(2)	(3)	(4)	(5)	(6)	(7)	(8)	(9)	(10)
INVESTMENT										
LAND	12460.	0.	0.	0.	0.	0.	0.	0.	0.	0.
BUILDING	1100.	4710.	0.	17210.	0.	0.	0.	0.	0.	0.
MACHINERY	0.	1907.	40236.	60279.	26153.	3273.	0.	0.	2304.	1402.
WORKING CAPITAL	0.	0.	0.	0.	5035.	1129.	218.	129.	-66.	-40.
PRE-OPERATING EXP.	0.	822.	2521.	6212.	0.	0.	0.	0.	0.	0.
OTHERS	0.	0.	0.	0.	0.	0.	0.	0.	0.	0.
TOTAL	13560.	7439.	42757.	83701.	31188.	4402.	218.	129.	2238.	1362.
EARNINGS										
PROFIT AFTER TAX	0.	0.	2502.	7926.	-7301.	-12416.	-10338.	-8586.	-6097.	-4515.
ADD BACK TAX ALL.	0.	0.	0.	0.	20096.	20833.	20833.	20833.	19446.	19025.
INTEREST	0.	0.	0.	0.	0.	11102.	11004.	10685.	9942.	9011.
OTHERS	0.	0.	0.	0.	0.	0.	0.	0.	0.	0.
TOTAL	0.	0.	2502.	7926.	12796.	19519.	21499.	22932.	23291.	23521.

*** DISCOUNTED CASH FLOW LIST FOR ROE ***

	(1)	(2)	(3)	(4)	(5)	(6)	(7)	(8)	(9)	(10)
CASH OUT										
INVESTMENT	13560.	8253.	43937.	87533.	35069.	3273.	0.	0.	2304.	1402.
-LONG TERM LOAN	-10170.	-6190.	-32952.	-65650.	-24667.	0.	0.	0.	0.	0.
-SHORT TERM LOAN	0.	0.	0.	0.	0.	0.	0.	0.	0.	0.
OTHERS	0.	0.	0.	0.	0.	0.	0.	0.	0.	0.
TOTAL	3390.	2063.	10985.	21883.	10402.	3273.	0.	0.	2304.	1402.
CASH IN										
PROFIT AFTER TAX	0.	0.	4035.	11251.	-12159.	-12416.	-10338.	-8586.	-6097.	-4515.
DEPRECIATION	0.	0.	0.	0.	18254.	18990.	18990.	18990.	17603.	17182.
AMORTIZATION	0.	0.	0.	0.	1843.	1843.	1843.	1843.	1843.	1843.
-REPAY. L.T.L.	0.	0.	0.	0.	-848.	-1364.	-4109.	-9580.	-11636.	-11636.
-REPAY. S.T.L.	0.	0.	0.	0.	0.	0.	0.	0.	0.	0.
TOTAL	0.	0.	4035.	11251.	7090.	7053.	6386.	2667.	1713.	2874.

*** DISCOUNTED CASH FLOW LIST FOR ROI ***

	(11)	(12)	(13)	(14)	(15)	(16)	(17)	(18)	(19)	(20)
INVESTMENT										
LAND	0.	0.	0.	0.	0.	0.	0.	0.	0.	0.
BUILDING	0.	0.	0.	0.	0.	0.	0.	0.	0.	0.
MACHINERY	3347.	2181.	3273.	0.	0.	2304.	1402.	3347.	2181.	3273.
WORKING CAPITAL	46.	27.	-1007.	-35.	-265.	-7.	-39.	49.	31.	11.
PRE-OPERATING EXP.	0.	0.	0.	0.	0.	0.	0.	0.	0.	0.
OTHERS	0.	0.	0.	0.	0.	0.	0.	0.	0.	0.
TOTAL	3393.	2208.	2266.	-35.	-265.	2297.	1363.	3396.	2212.	3284.
EARNINGS										
PROFIT AFTER TAX	-4112.	-3555.	11616.	13987.	18221.	17067.	12974.	13155.	13407.	13685.
ADD BACK TAX ALL.	19778.	20269.	5132.	4817.	1418.	1446.	1025.	1778.	2269.	2487.
INTEREST	8080.	7149.	6218.	5287.	4356.	3426.	2495.	1632.	799.	188.
OTHERS	0.	0.	0.	0.	0.	0.	0.	0.	0.	0.
TOTAL	23746.	23863.	22966.	24091.	23996.	21938.	16494.	16565.	16475.	16359.

*** DISCOUNTED CASH FLOW LIST FOR ROE ***

	(11)	(12)	(13)	(14)	(15)	(16)	(17)	(18)	(19)	(20)
CASH OUT										
INVESTMENT	3347.	2181.	3273.	0.	0.	2304.	1402.	3347.	2181.	3273.
-LONG TERM LOAN	0.	0.	0.	0.	0.	0.	0.	0.	0.	0.
-SHORT TERM LOAN	0.	0.	0.	0.	0.	0.	0.	0.	0.	0.
OTHERS	0.	0.	0.	0.	0.	0.	0.	0.	0.	0.
TOTAL	3347.	2181.	3273.	0.	0.	2304.	1402.	3347.	2181.	3273.
CASH IN										
PROFIT AFTER TAX	-4112.	-3555.	11616.	13987.	18221.	19501.	18492.	13266.	13561.	13855.
DEPRECIATION	17935.	18426.	5132.	4817.	1418.	1446.	1025.	1778.	2269.	2487.
AMORTIZATION	1843.	1843.	0.	0.	0.	0.	0.	0.	0.	0.
-REPAY. L.T.L.	-11636.	-11636.	-11636.	-11636.	-11636.	-11636.	-10788.	-10273.	-7526.	-2053.
-REPAY. S.T.L.	0.	0.	0.	0.	0.	0.	0.	0.	0.	0.
TOTAL	4030.	5078.	5112.	7168.	8003.	9311.	8728.	4771.	8304.	14289.

*** DISCOUNTED CASH FLOW LIST FOR ROI ***

	(21)	(22)	(23)	(24)
INVESTMENT				
LAND	0.	0.	0.	-12460.
BUILDING	0.	0.	0.	-2302.
MACHINERY	0.	0.	0.	-12640.
WORKING CAPITAL	-29.	-61.	-41.	-5083.
PRE-OPERATING EXP.	0.	0.	0.	0.
OTHERS	0.	0.	0.	0.
TOTAL	-29.	-61.	-41.	-32485.
EARNINGS				
PROFIT AFTER TAX	14013.	14497.	14847.	15323.
ADD BACK TAX ALL.	2171.	1418.	927.	191.
INTEREST	0.	0.	0.	0.
OTHERS	0.	0.	0.	0.
TOTAL	16185.	15915.	15775.	15514.

*** DISCOUNTED CASH FLOW LIST FOR ROE ***

	(21)	(22)	(23)	(24)
CASH OUT				
INVESTMENT	0.	0.	0.	-27402.
-LONG TERM LOAN	0.	0.	0.	0.
-SHORT TERM LOAN	0.	0.	0.	0.
OTHERS	0.	0.	0.	-152796.
TOTAL	0.	0.	0.	-180198.
CASH IN				
PROFIT AFTER TAX	14215.	14794.	15062.	6729.
DEPRECIATION	2171.	1418.	927.	191.
AMORTIZATION	0.	0.	0.	0.
-REPAY. L.T.L.	0.	0.	0.	0.
-REPAY. S.T.L.	0.	0.	0.	-1007.
TOTAL	16386.	16212.	15989.	5912.

*** BALANCE SHEET ***

PROJECT NAME : ALCOGAS PROJ. P+E 8
CASE NO : 48.0KL/D

CURRENCY UNIT : 1000 PESO
QUANTITY UNIT : KL & TON

DATE 82. 1.31

	(1)	(2)	(3)	(4)	(5)	(6)	(7)	(8)	(9)	(10)
CURRENT ASSETS										
CASH ON HAND	0.	0.	4034.	15286.	15160.	17811.	23979.	26518.	25993.	27505.
ACCOUNT RECEIVABLE	0.	0.	0.	0.	1742.	2481.	2643.	2741.	2773.	2775.
MATERIALS	0.	0.	0.	0.	73.	108.	114.	119.	121.	121.
FINISHED GOODS	0.	0.	0.	0.	3833.	4474.	4577.	4642.	4558.	4516.
TOTAL (1)	0.	0.	4034.	15286.	20809.	24874.	31314.	34020.	33444.	34916.
FIXED ASSETS										
LAND	12460.	12460.	12460.	12460.	12460.	12460.	12460.	12460.	12460.	12460.
BUILDINGS	1100.	5810.	5810.	23020.	21139.	19258.	17377.	15497.	13616.	11735.
MACHINERIES	0.	1907.	42143.	102422.	113158.	100277.	84123.	67970.	55507.	42563.
DEFERRED EXPENSE	0.	1636.	5337.	15381.	21499.	18701.	15902.	13104.	10306.	7508.
OTHER ASSETS	0.	0.	0.	0.	0.	0.	0.	0.	0.	0.
TOTAL (2)	13560.	21813.	65750.	153283.	168256.	150696.	129863.	109030.	91888.	74265.
* TOTAL (1)+(2)	13560.	21813.	69784.	168569.	189064.	175570.	161178.	143050.	125332.	109181.
CURRENT LIABILITIES										
ACCOUNT PAYABLE	0.	0.	0.	0.	613.	899.	954.	992.	1008.	1007.
SHORT TERM LOAN	0.	0.	0.	0.	0.	0.	0.	0.	0.	0.
ACCRUED ACCOUNT PAYABLE	0.	0.	0.	0.	0.	0.	0.	0.	0.	0.
TOTAL (3)	0.	0.	0.	0.	613.	899.	954.	992.	1008.	1007.
FIXED LIABILITIES										
LONG TERM LOAN	10170.	16360.	49312.	114962.	138781.	137417.	133308.	123728.	112092.	100456.
DEFERRED PAYMENT	0.	0.	0.	0.	0.	0.	0.	0.	0.	0.
TOTAL (4)	10170.	16360.	49312.	114962.	138781.	137417.	133308.	123728.	112092.	100456.
CAPITAL										
PAID UP CAPITAL	3390.	5453.	16437.	38321.	46543.	46543.	46543.	46543.	46543.	46543.
RESERVE	0.	0.	0.	2502.	10428.	3127.	-9289.	-19627.	-28213.	-34310.
NET PROFIT (B. TAX)	0.	0.	4035.	12784.	-7301.	-12416.	-10338.	-8586.	-6097.	-4515.
TOTAL (5)	3390.	5453.	20472.	53607.	49670.	37254.	26916.	18330.	12233.	7718.
* TOTAL (3)+(4)+(5)	13560.	21813.	69784.	168569.	189064.	175570.	161178.	143050.	125332.	109181.

*** BALANCE SHEET ***

PROJECT NAME : ALCOGAS PROJ. P+E 8
CASE NO : 48.0KL/D

CURRENCY UNIT : 1000 PESO
QUANTITY UNIT : KL & TON

DATE 82. 1.31

	(11)	(12)	(13)	(14)	(15)	(16)	(17)	(18)	(19)	(20)
CURRENT ASSETS										
CASH ON HAND	28141.	31012.	33859.	41062.	49330.	56344.	63710.	65085.	71177.	82182.
ACCOUNT RECEIVABLE	2775.	2775.	2775.	2775.	2775.	2775.	2775.	2775.	2775.	2775.
MATERIALS	121.	121.	121.	121.	121.	121.	121.	121.	121.	121.
FINISHED GOODS	4562.	4588.	3581.	3546.	3281.	3274.	3235.	3284.	3315.	3326.
TOTAL (1)	35599.	38496.	40335.	47503.	55506.	62514.	69840.	71264.	77387.	88403.
FIXED ASSETS										
LAND	12460.	12460.	12460.	12460.	12460.	12460.	12460.	12460.	12460.	12460.
BUILDINGS	9854.	7973.	6092.	4211.	4020.	3829.	3639.	3448.	3257.	3066.
MACHINERIES	30811.	17402.	18379.	16399.	15172.	16221.	16789.	18549.	18653.	19630.
DEFERRED EXPENSE	4709.	1911.	956.	0.	0.	0.	0.	0.	0.	0.
OTHER ASSETS	0.	0.	0.	0.	0.	0.	0.	0.	0.	0.
TOTAL (2)	57834.	39746.	37887.	33070.	31652.	32511.	32888.	34457.	34369.	35156.
* TOTAL (1)+(2)	93433.	78242.	78222.	80574.	87159.	95024.	102728.	105721.	111757.	123559.
CURRENT LIABILITIES										
ACCOUNT PAYABLE	1007.	1007.	1007.	1007.	1007.	1007.	1007.	1007.	1007.	1007.
SHORT TERM LOAN	0.	0.	0.	0.	0.	0.	0.	0.	0.	0.
ACCRUED ACCOUNT PAYABLE	0.	0.	0.	0.	0.	0.	0.	0.	0.	0.
TOTAL (3)	1007.	1007.	1007.	1007.	1007.	1007.	1007.	1007.	1007.	1007.
FIXED LIABILITIES										
LONG TERM LOAN	88820.	77184.	65548.	53912.	42276.	30640.	19852.	9579.	2053.	0.
DEFERRED PAYMENT	0.	0.	0.	0.	0.	0.	0.	0.	0.	0.
TOTAL (4)	88820.	77184.	65548.	53912.	42276.	30640.	19852.	9579.	2053.	0.
CAPITAL										
PAID UP CAPITAL	46543.	46543.	46543.	46543.	46543.	46543.	46543.	46543.	46543.	46543.
RESERVE	-38825.	-42938.	-46492.	-34876.	-20889.	-2668.	14399.	27374.	40529.	53936.
NET PROFIT (B. TAX)	-4112.	-3555.	11616.	13987.	18221.	19501.	20926.	21218.	21624.	22072.
TOTAL (5)	3605.	51.	11667.	25654.	43875.	63377.	81868.	95135.	108696.	122551.
* TOTAL (3)+(4)+(5)	93433.	78242.	78222.	80574.	87159.	95024.	102728.	105721.	111757.	123559.

*** BALANCE SHEET ***

PROJECT NAME : ALCOGAS PROJ. P+E 8
CASE NO : 48.0KL/D

CURRENCY UNIT : 1000 PESO
QUANTITY UNIT : KL & TON

DATE 82. 1.31

	(21)	(22)	(23)	(24)	(25)	(26)	(27)	(28)	(29)	(30)
CURRENT ASSETS										
CASH ON HAND	98597.	114870.	130900.	146764.						
ACCOUNT RECEIVABLE	2775.	2775.	2775.	2775.						
MATERIALS	121.	121.	121.	121.						
FINISHED GOODS	3297.	3236.	3195.	3136.						
TOTAL (1)	104789.	121001.	136990.	152796.						
FIXED ASSETS										
LAND	12460.	12460.	12460.	12460.						
BUILDINGS	2875.	2684.	2493.	2302.						
MACHINERIES	17650.	16423.	15686.	15686.						
DEFERRED EXPENSE	0.	0.	0.	0.						
OTHER ASSETS	0.	0.	0.	0.						
TOTAL (2)	32985.	31566.	30639.	30448.						
* TOTAL (1)+(2)	137774.	152568.	167630.	183244.						
CURRENT LIABILITIES										
ACCOUNT PAYABLE	1007.	1007.	1007.	1007.						
SHORT TERM LOAN	0.	0.	0.	0.						
ACCRUED ACCOUNT PAYABLE	0.	0.	0.	0.						
TOTAL (3)	1007.	1007.	1007.	1007.						
FIXED LIABILITIES										
LONG TERM LOAN	0.	0.	0.	0.						
DEFERRED PAYMENT	0.	0.	0.	0.						
TOTAL (4)	0.	0.	0.	0.						
CAPITAL										
PAID UP CAPITAL	46543.	46543.	46543.	46543.						
RESERVE	67621.	81634.	96132.	110979.						
NET PROFIT (B. TAX)	22602.	23383.	23947.	24715.						
TOTAL (5)	136766.	151560.	166622.	182237.						
* TOTAL (3)+(4)+(5)	137774.	152568.	167630.	183244.						

PROJECT NAME :ALCOGAS PROJ. P+E 8 CURRENCY UNIT :1000 PESO DATE 82. 1.31

CASE NO :48.0KL/D QUANTITY UNIT :KL & TON

PROJECT LIFE IS 24 YEARS

P.O.T.(DISCOUNT RATE= 0) IS 12.06 YEARS

*** INTERNAL RATE OF RETURN ON INVEST. & EQUITY ***

IRR(INVESTMENT) 9.16 %

IRR (EQUITY) 16.77 %

JICA