社会開発協力部

No. 8

REPUBLIC OF KENYA MINISTRY OF TRANSPORT AND COMMUNICATIONS

FEASIBILITY STUDY ON LIKONI CROSSING CONSTRUCTION PROJECT

FINAL REPORT

VOL. III DRAWINGS

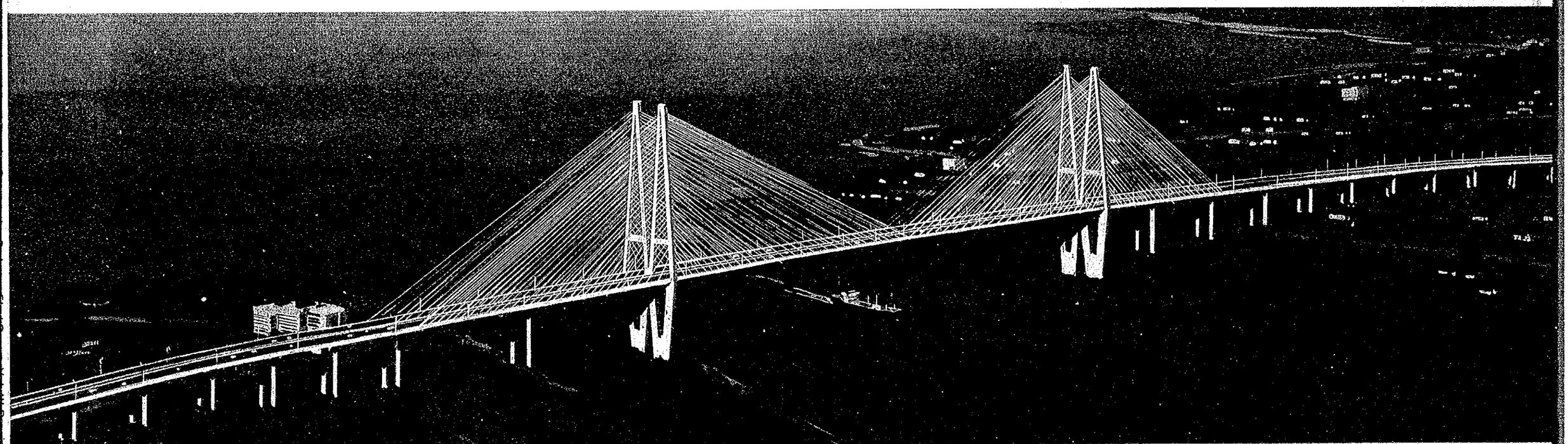

APRIL 1984

JAPAN INTERNATIONAL COOPERATION AGENCY

JICA
L407
615
SDF
LIBRARY

SDF
~~CR(5)~~
84-047 (3/3)

JICA LIBRARY
1029674[7]

L407
61.5
SDF (C2 61.4)

REPUBLIC OF KENYA MINISTRY OF TRANSPORT AND COMMUNICATIONS

FEASIBILITY STUDY ON LIKONI CROSSING CONSTRUCTION PROJECT

FINAL REPORT

VOL. III DRAWINGS

APRIL 1984

JAPAN INTERNATIONAL COOPERATION AGENCY

国際協力事業団
受入月日 '84. 8. 3
登録No. 10578
L407
615
SDF

PRELIMINARY ENGINEERING DRAWINGS

CONTENTS

	TITLE	PAGE
1.	MAP OF KENYA	1
2.	MAP OF PROJECT AREA	2
3.	MAP OF PROJECT ROAD (1)	3
4.	MAP OF PROJECT ROAD (2)	4
5.	TYPICAL CROSS SECTION (1)	5
6.	TYPICAL CROSS SECTION (2)	6
7.	PLAN AND PROFILE (1) (NAVIGATION CLEARANCE H = 73.2 M)	7
8.	PLAN AND PROFILE (2) (NAVIGATION CLEARANCE H = 73.2 M)	8
9.	PLAN AND PROFILE (3) (NAVIGATION CLEARANCE H = 73.2, 55 M)	9
10.	PLAN AND PROFILE (4) (NAVIGATION CLEARANCE H = 55 M)	10
11.	PLAN AND PROFILE (5) (NAVIGATION CLEARANCE H = 55 M)	11
12.	PLAN AND PROFILE (6) (NAVIGATION CLEARANCE H = 45 M)	12
13.	PLAN AND PROFILE (7) (NAVIGATION CLEARANCE H = 45 M)	13
14.	PLAN AND PROFILE (8) (NAVIGATION CLEARANCE H = 45 M)	14
15.	GENERAL VIEW OF MAIN BRIDGE (PC) (NAVIGATION CLEARANCE H = 73.2 M)	15
16.	GENERAL VIEW OF MAIN BRIDGE (PC) (NAVIGATION CLEARANCE H = 55 M)	16
17.	GENERAL VIEW OF MAIN BRIDGE (PC) (NAVIGATION CLEARANCE H = 45 M)	17
18.	GENERAL VIEW OF MAIN BRIDGE (STEEL) (NAVIGATION CLEARANCE H = 73.2 M)	18
19.	GENERAL VIEW OF MAIN BRIDGE (STEEL) (NAVIGATION CLEARANCE H = 55 M)	19
20.	GENERAL VIEW OF MAIN BRIDGE (STEEL) (NAVIGATION CLEARANCE H = 45 M)	20
21.	APPROACH BRIDGE OF MOMBASA SIDE (NAVIGATION CLEARANCE H = 73.2 M)	21
22.	APPROACH BRIDGE OF MOMBASA SIDE (VANIGATION CLEARANCE H = 55 M)	22
23.	APPROACH BRIDGE OF MOMBASA SIDE (NAVIGATION CLEARANCE H = 45 M)	23
24.	APPROACH BRIDGE OF LIKONI SIDE	24
25.	TYPICAL SECTION OF APPROACH BRIDGE	25
26.	INTERSECTION PLAN MBARAKI INTERSECTION (1)	26
27.	INTERSECTION PLAN DEDAN KIMATHI INTERSECTION (2)	27
28.	INTERSECTION PLAN LUNGA LUNGA INTERSECTION (3)	28

APPENDIX

29.	DIMENSIONAL DETAILS OF PC MAIN BRIDGE (1)	29
30.	DIMENSIONAL DETAILS OF PC MAIN BRIDGE (2)	30
31.	DIMENSIONAL DETAILS OF PC MAIN BRIDGE (3)	31
32.	DIMENSIONAL DETAILS OF PC MAIN BRIDGE (4)	32
33.	PC MAIN BRIDGE, ERECTION PLAN (5)	33
34.	DIMENSIONAL DETAILS OF STEEL MAIN BRIDGE (1)	34
35.	DIMENSIONAL DETAILS OF STEEL MAIN BRIDGE (2)	35
36.	STEEL MAIN BRIDGE, ERECTION PLAN (3)	36

PRELIMINARY ENGINEERING DRAWINGS

PROJECT LOCATION MAP

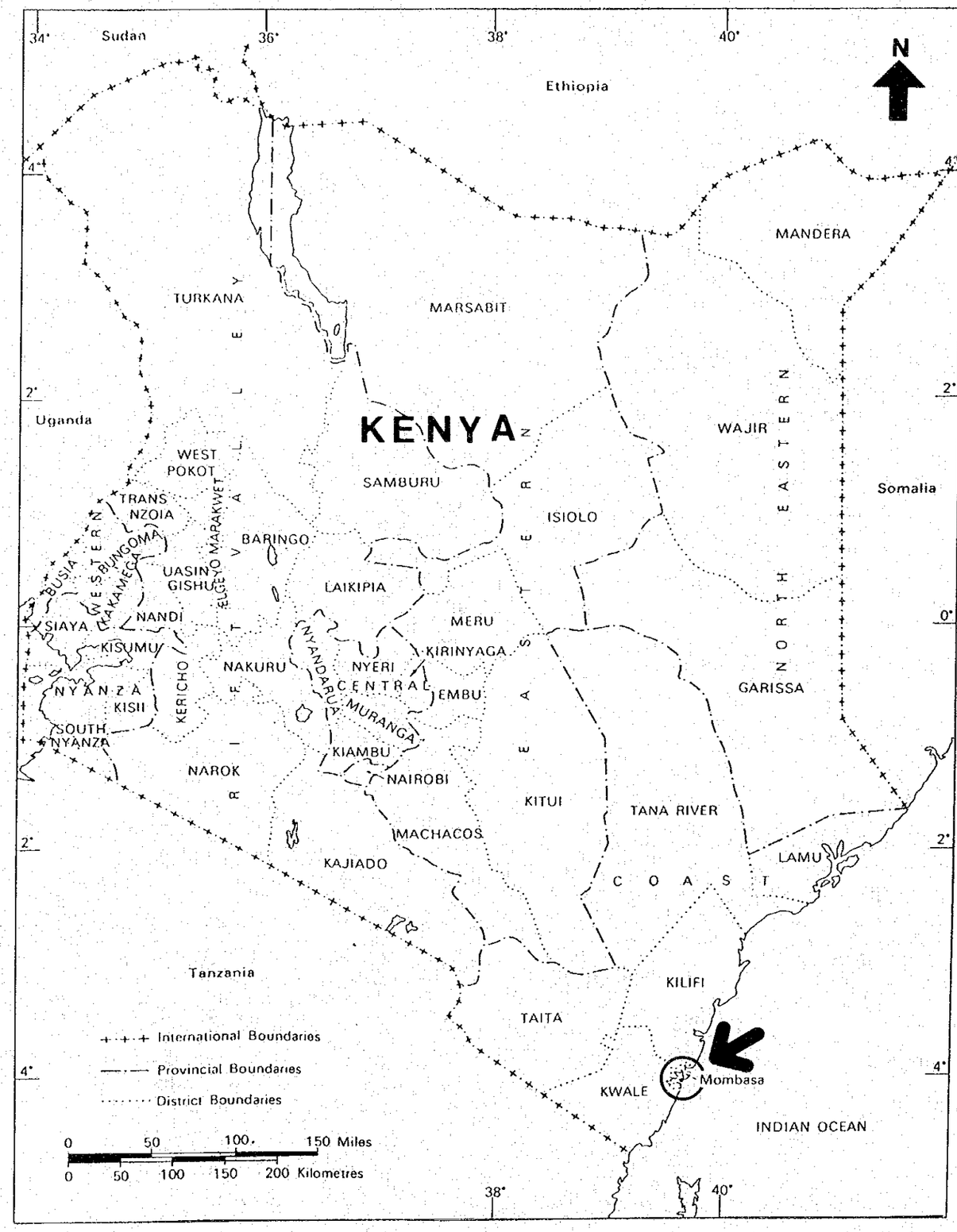

MAP OF PROJECT AREA

SCALE 1 : 23,500

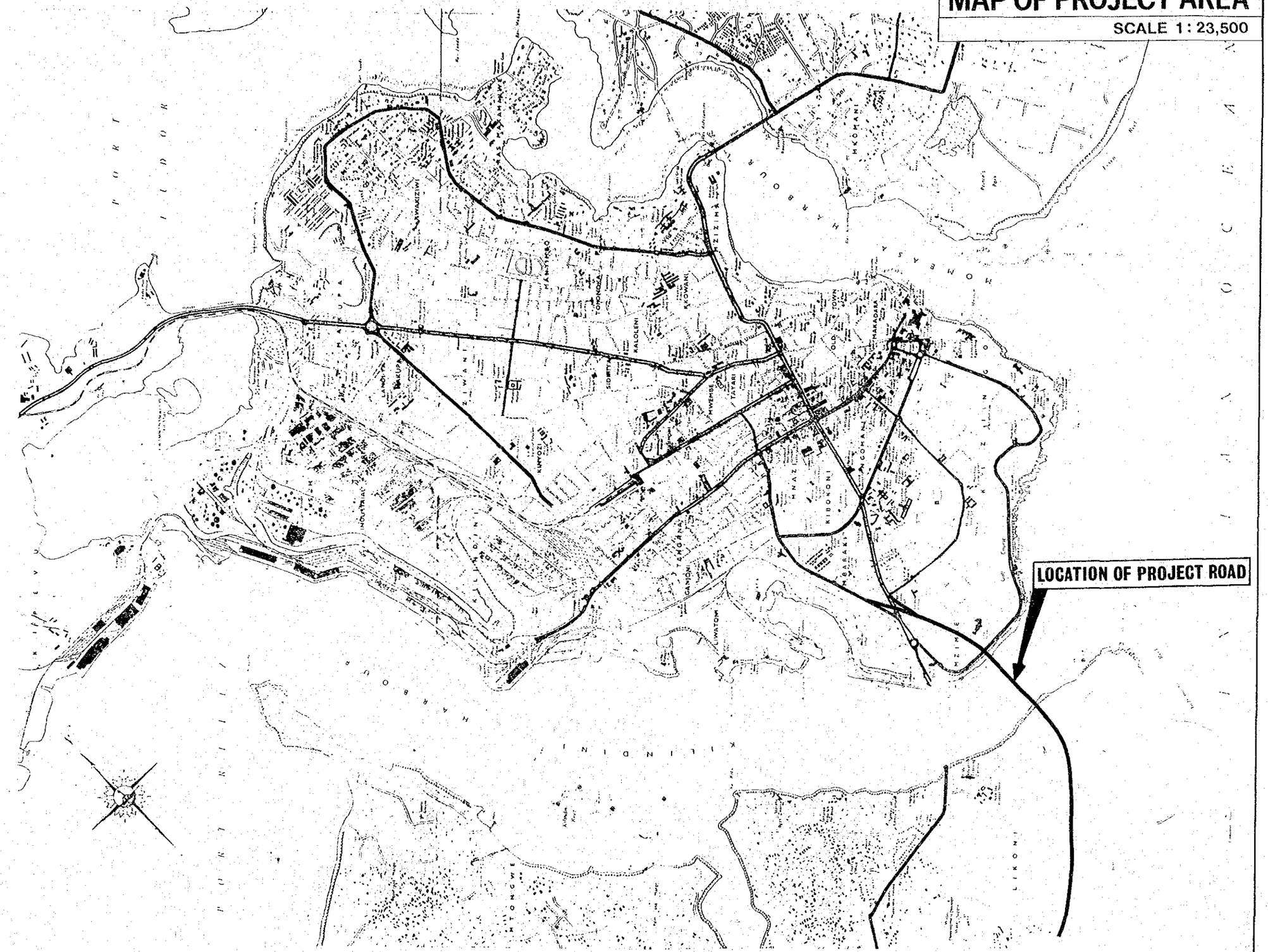

PROJECT	SHEET NO.	TOTAL SHEET
LIKONI CROSSING	1	2

MAP OF PROJECT ROAD H=73.2^{m} S=1:20,000

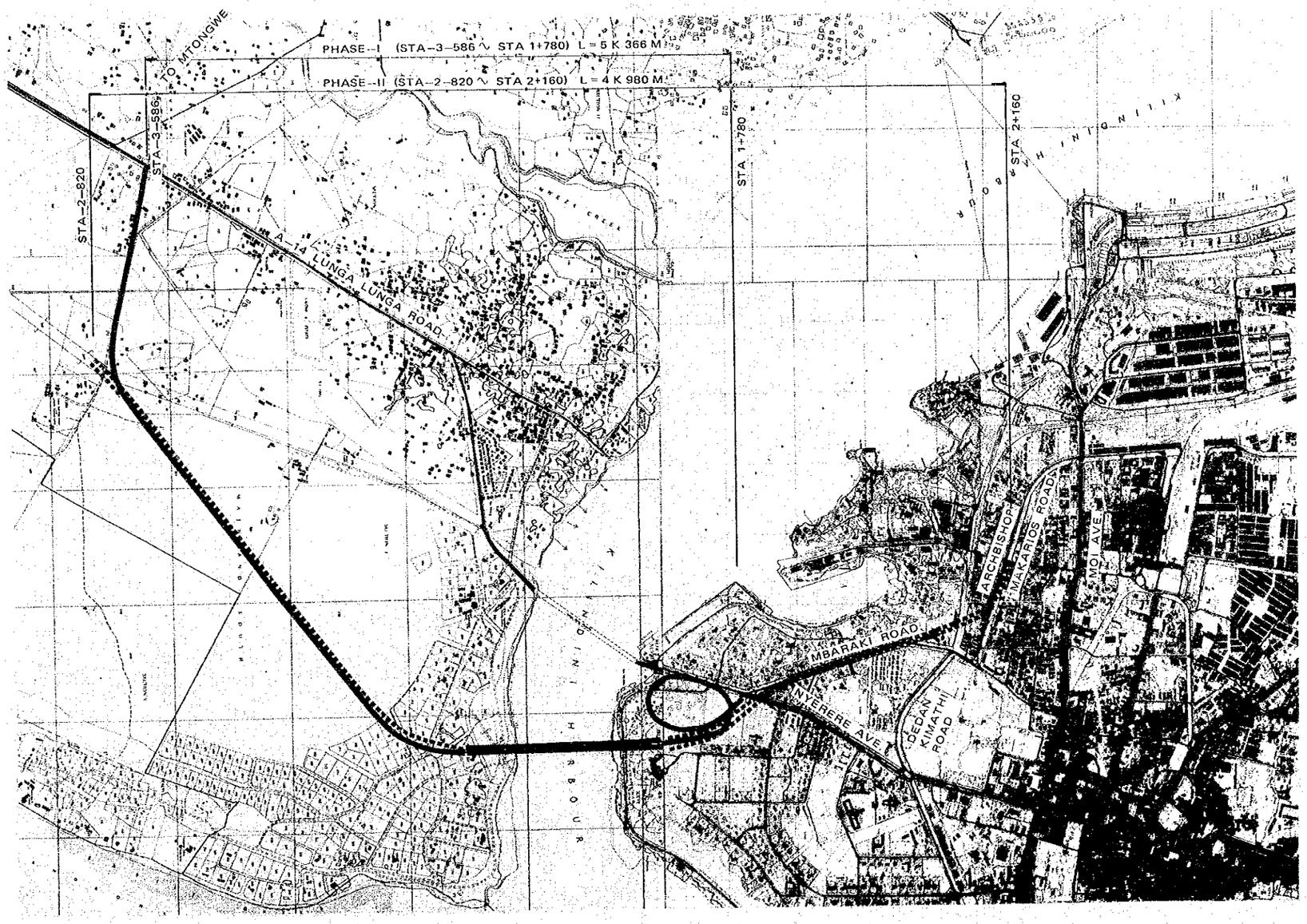

LEGEND

PHASE-I CONSTRUCTION

PHASE-II CONSTRUCTION

PROJECT	SHEET NO.	TOTAL SHEET
LIKONI CROSSING	2	2

MAP OF PROJECT ROAD H=55.45m S=1:20,000

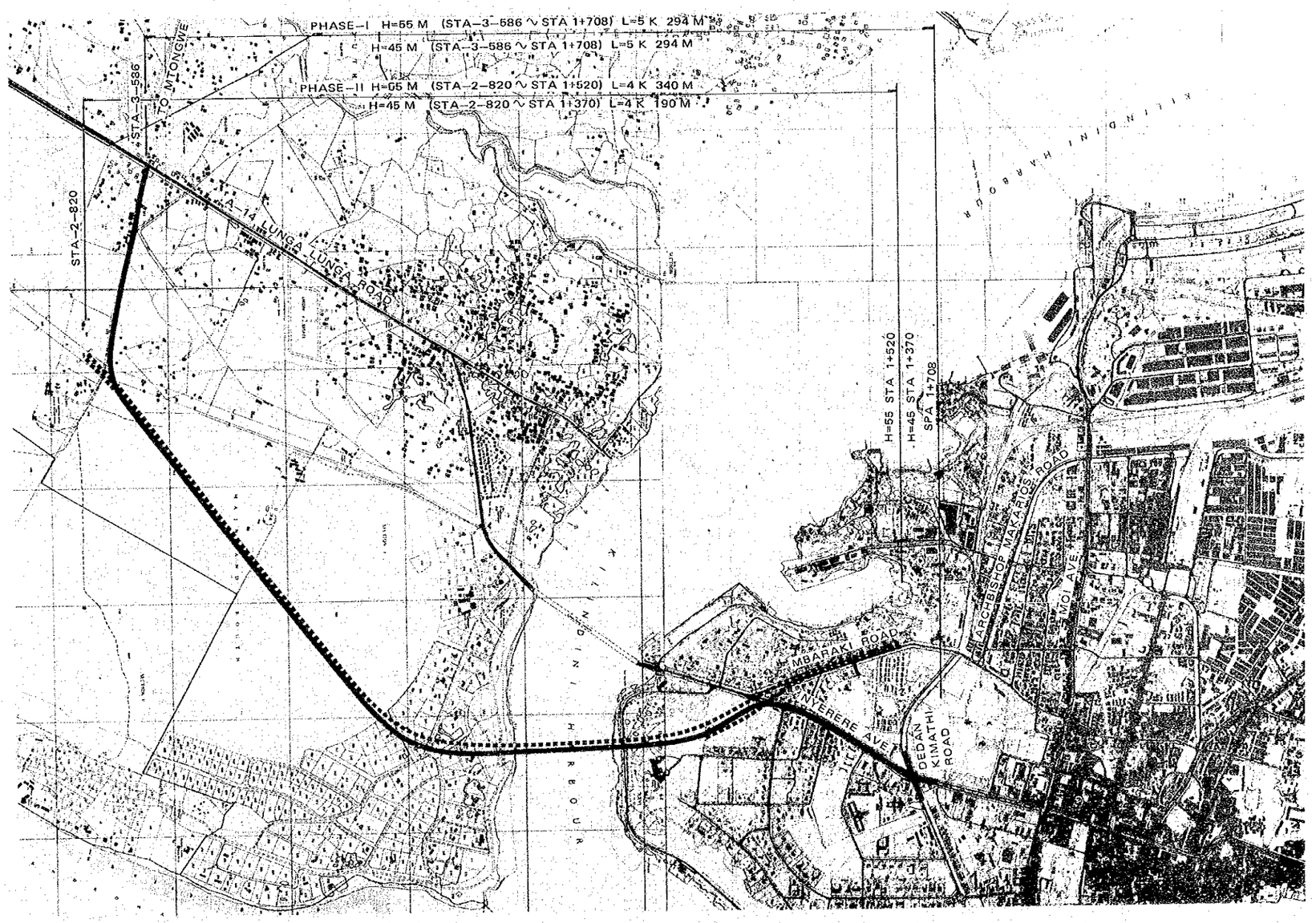

LEGEND

PHASE-I CONSTRUCTION

PHASE-II CONSTRUCTION

PROJECT	SHEET NO.	TOTAL SHEET
LIKONI CROSSING	1	2
TYPICAL CROSS SECTION	SCALE 1: 200	

NAVIGATION CLEARANCE :
H = 73.2M

MAIN BRIDGE SECTION

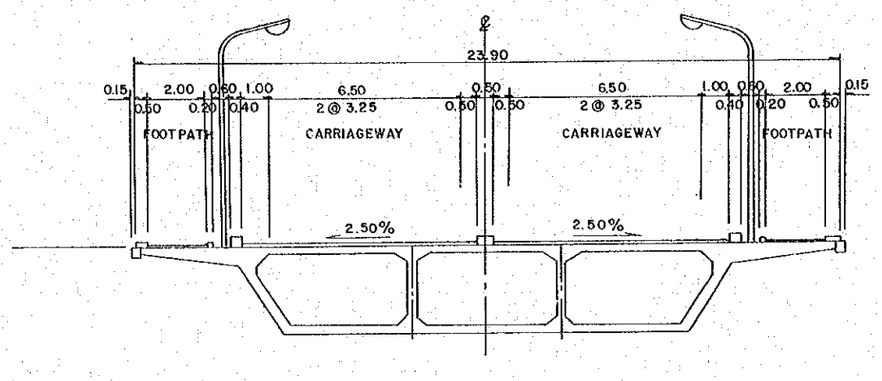

EMBANKMENT SECTION AT LIKONI SIDE

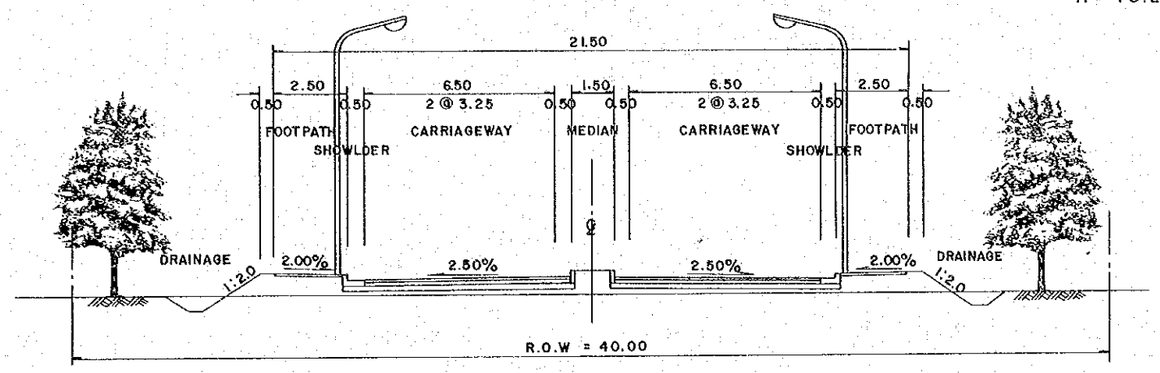

JOINT SECTION TO APPROACH BRIDGE

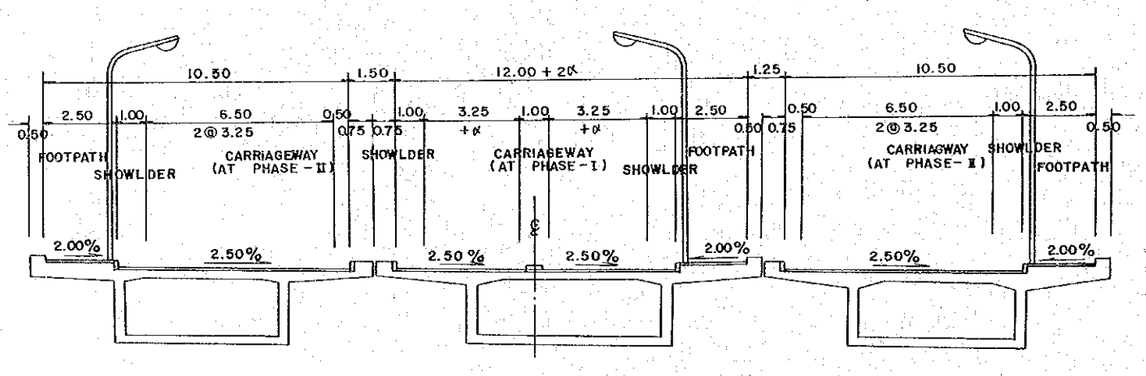

LOOP ACCESS SECTION (AT PHASE - I)

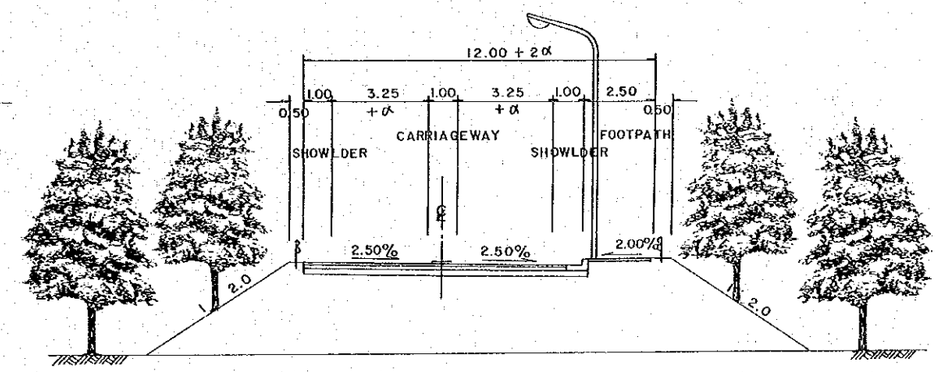

FUTURE EXTENSION SECTION TO MBARAKI ROAD (AT PHASE - II)

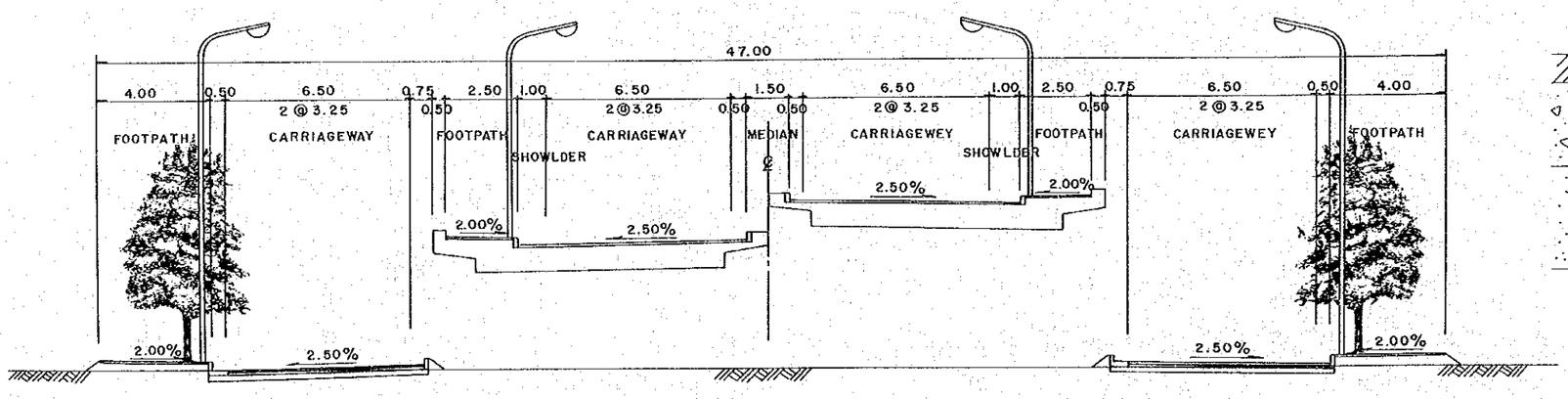

PAVEMENT SECTION

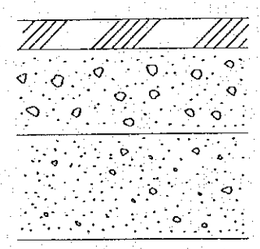

SURFACE COURSE t = 50mm
(ASPHALT CONCRETE TYPE - I)

BASE COURSE t = 150
(DENSE BITUMEN MACADAM)

SUB - BASE COURSE t = 175
(GRADED CRUSHED STONE)

PROJECT	SHEET NO.	TOTAL SHEET
LIKONI CROSSING	2	2
TYPICAL CROSS SECTION	SCALE 1:200	

NAVIGATION CLEARANCE :
H = 55, 45M

SEPARATE MAIN BRIDGE SECTION

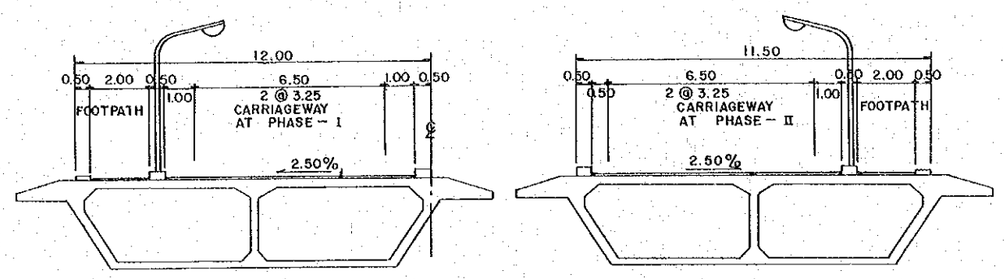

NOSE SECTION FOR FUTURE EXTENSION

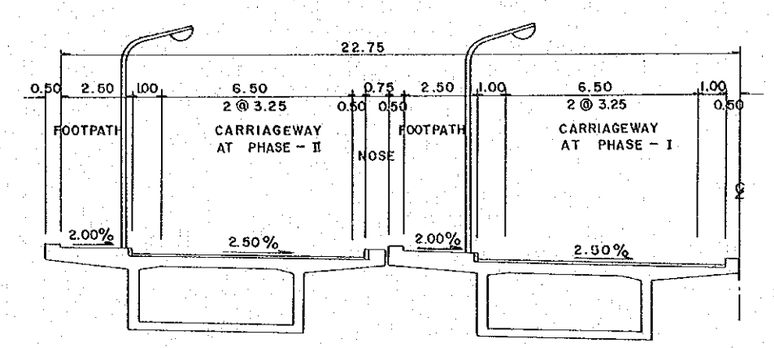

ACCESS SECTION TO NYERERE AVE.
(AT PHASE - I)

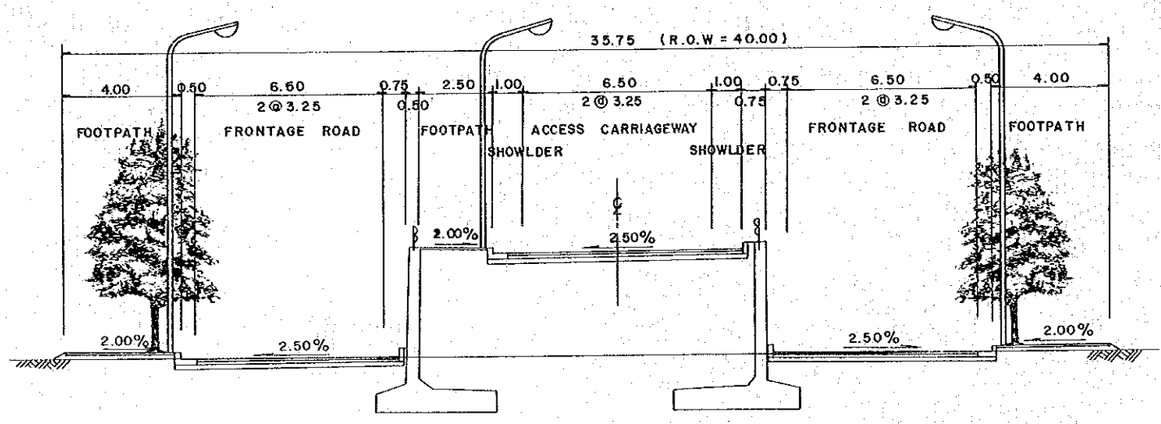

EMBANKMENT SECTION AT LIKONI SIDE

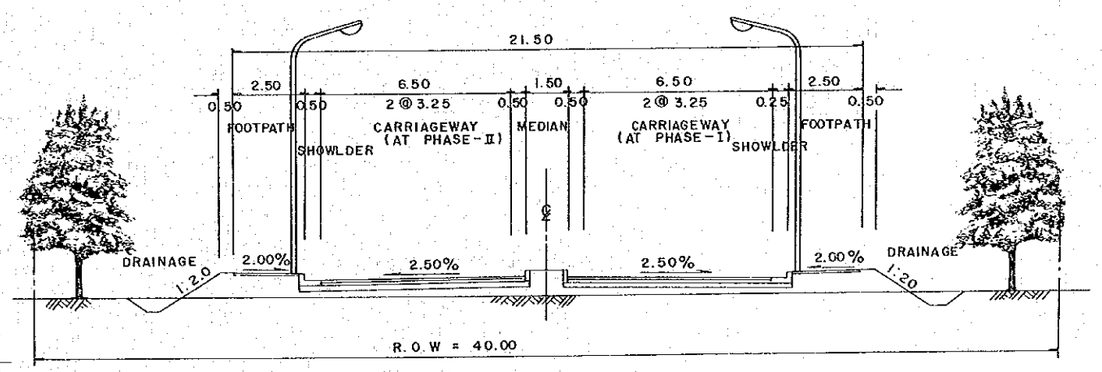

FUTURE EXTENSION SECTION TO MBARAKI ROAD
(AT PHASE - II)

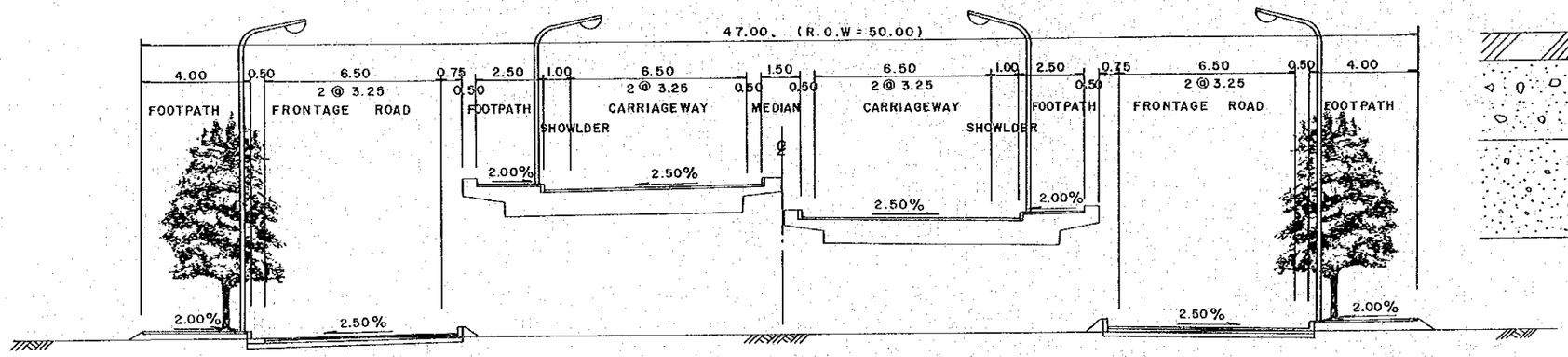

PAVEMENT SECTION

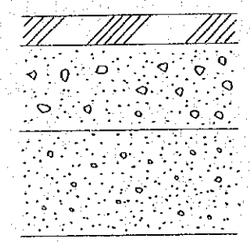

SURFACE COURSE t = 50mm
(ASPHALT CONCRETE TYPE - I)

BASE COURSE t = 150
(DENSE BITUMEN MACADAM)

SUB - BASE COURSE t = 175
(GRADED CRUSHED STONE)

PROJECT	SHEET NO	TOTAL SHEET
LIKONI CROSSING	1	8
PLAN AND PROFILE	SCALE	H:1:10000 V:1:2000

H = 73.2M

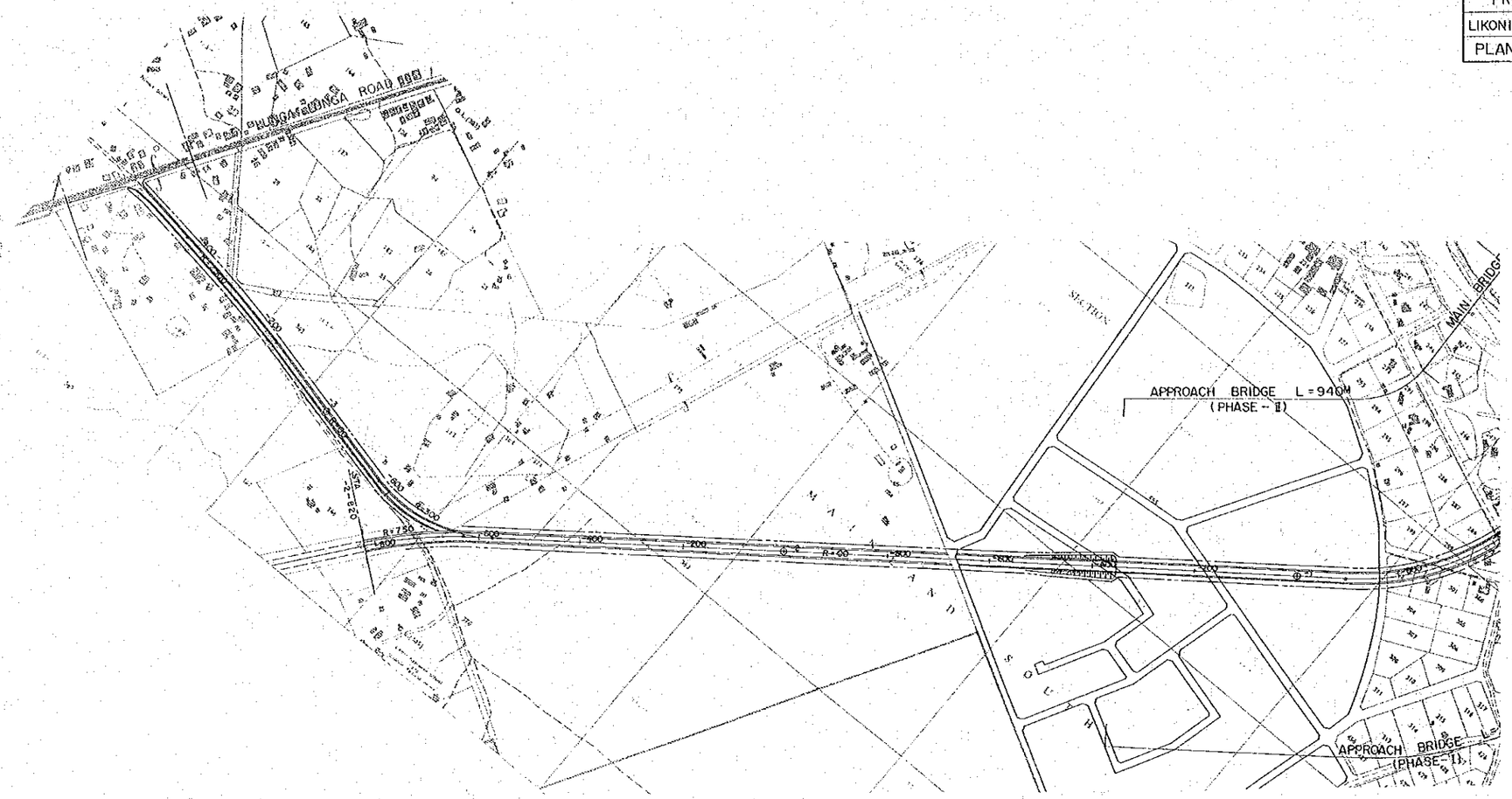

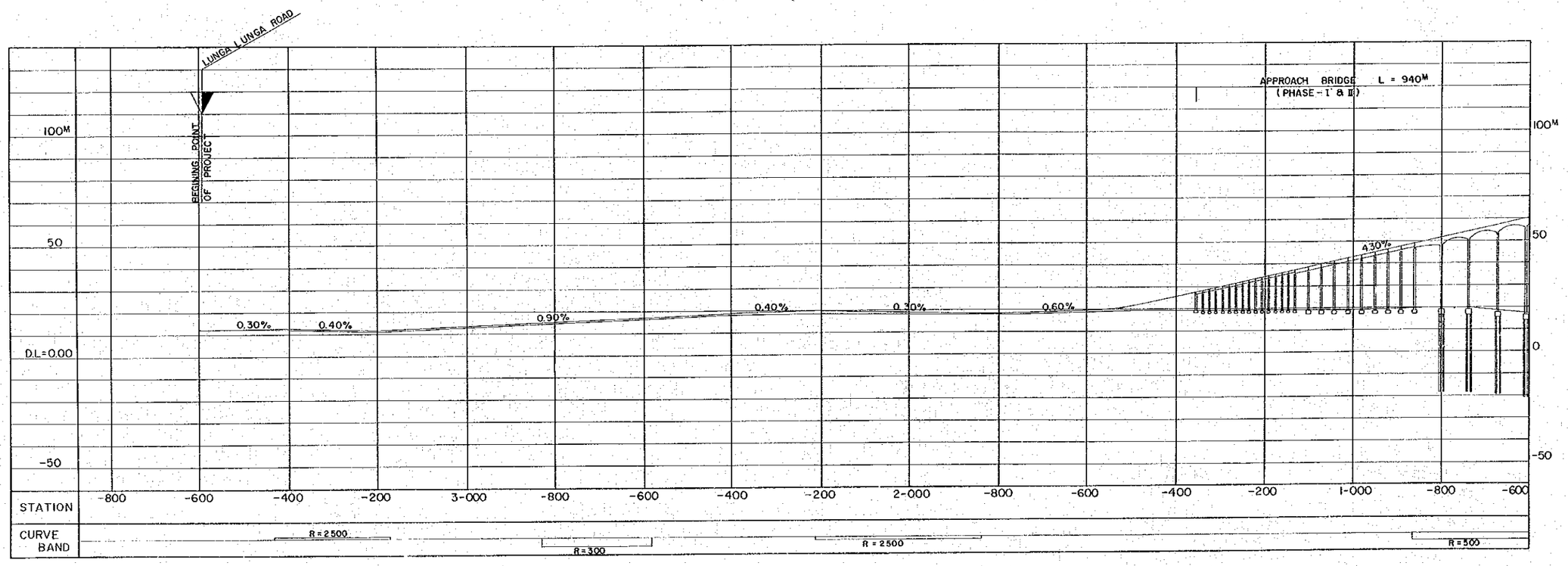

PROJECT	SHEET NO	TOTAL SHEET
LIKONI CROSSING	2	8
PLAN AND PROFILE	SCALE	H:1:10000 V:1:2000

H = 73.2M

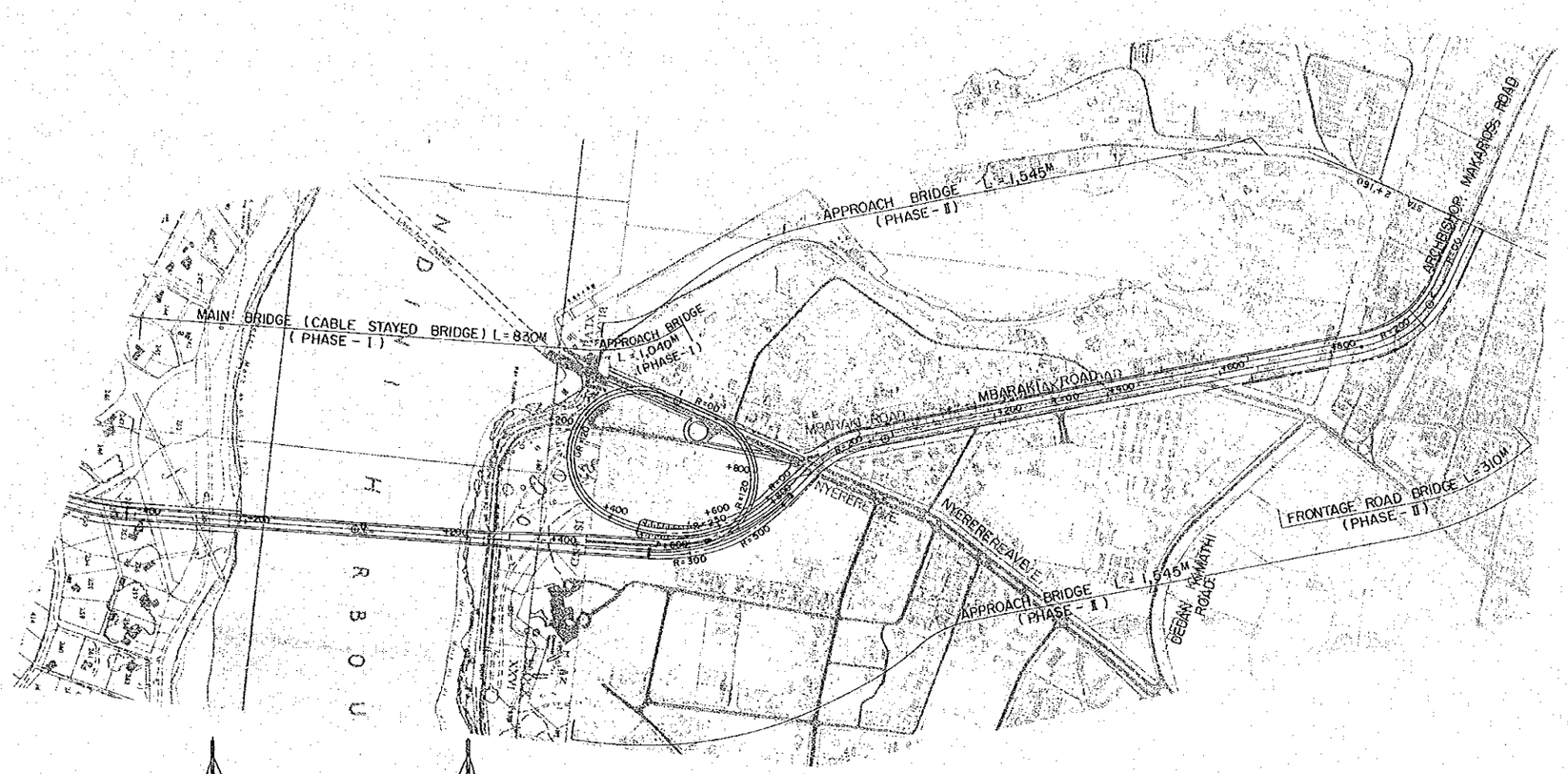

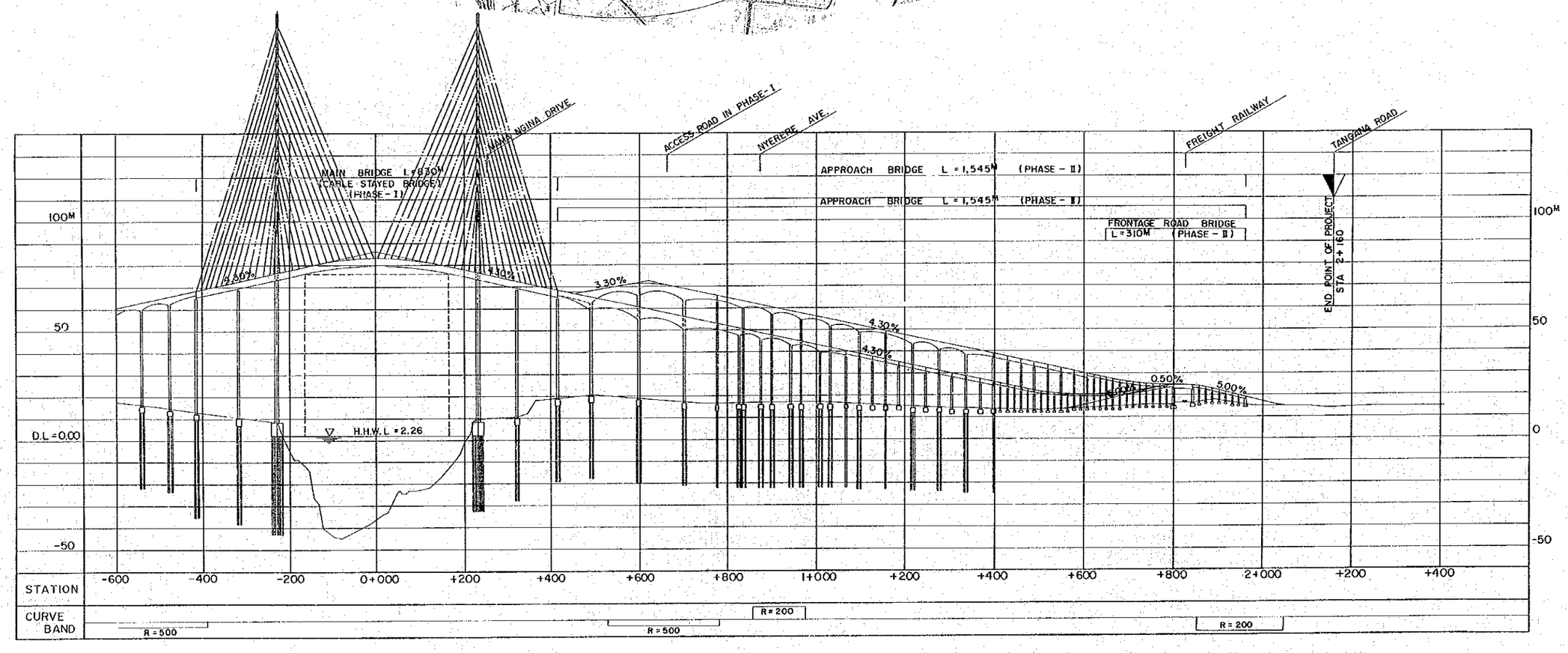

PROJECT	SHEET NO	TOTAL SHEET
LIKONI CROSSING	3	8
PLAN AND PROFILE	SCALE	H=1:10 000 V=1:2000

ACCESS ROAD AT PHASE – I

H = 73.2M
PHASE – I LOOP ACCESS

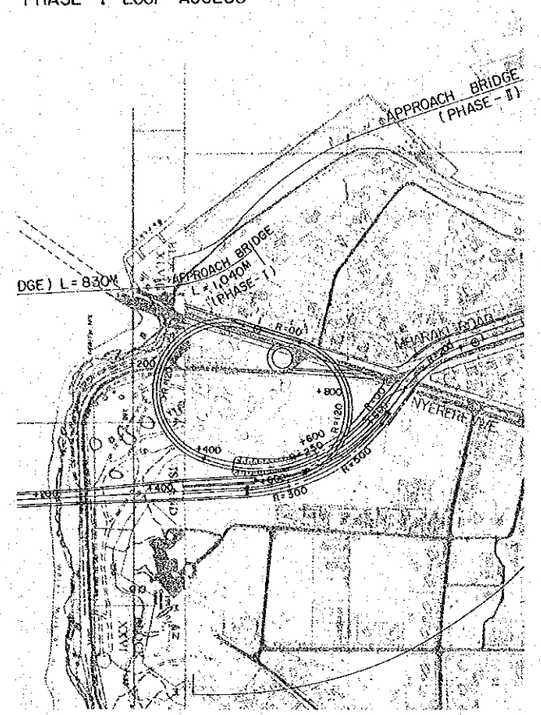

H = 55M
PHASE – I ACCESS

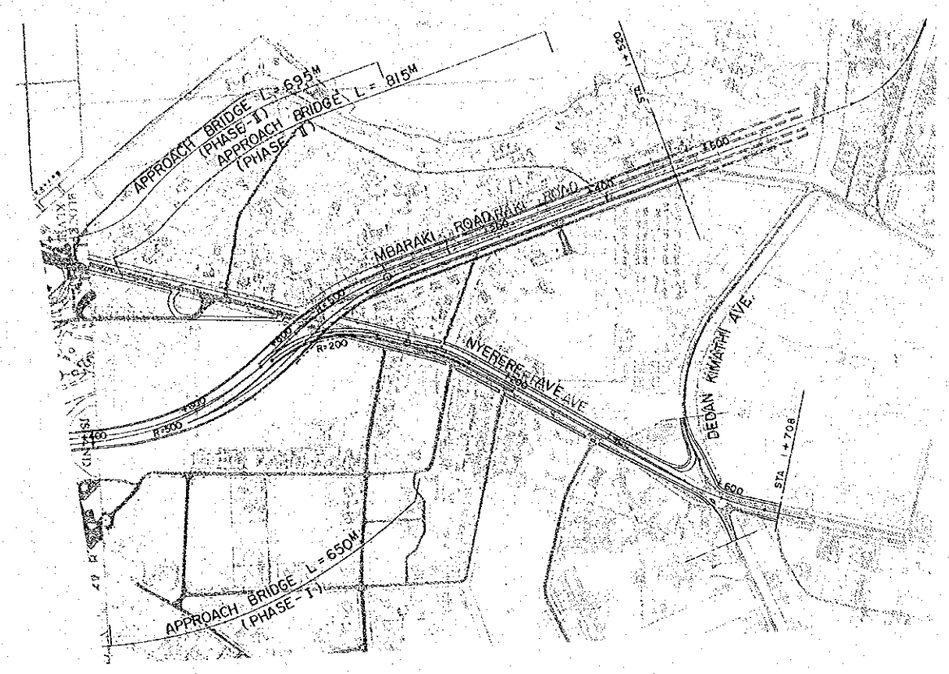

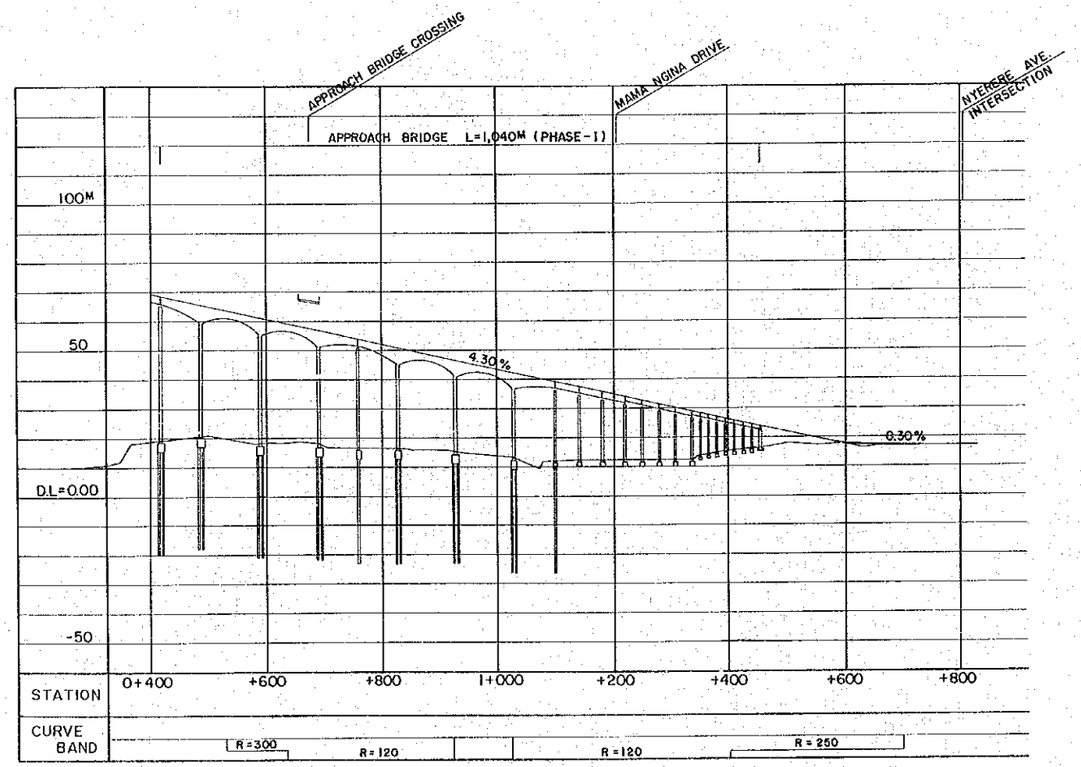

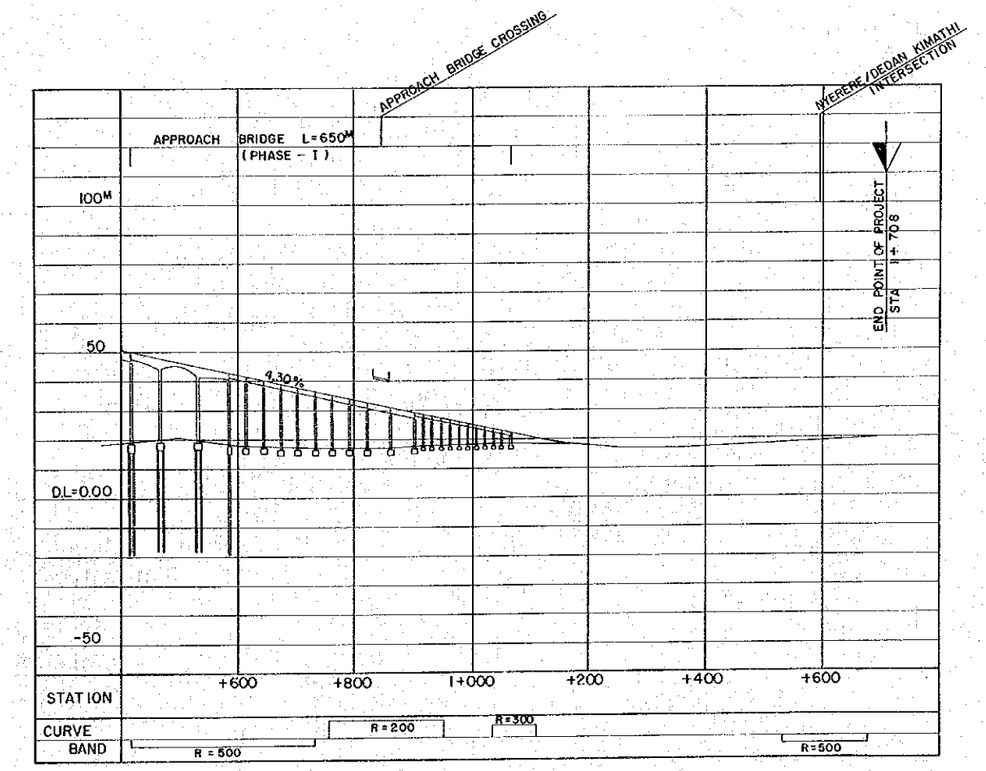

PROJECT	SHEET NO	TOTAL SHEET
LIKONI CROSSING	4	8
PLAN AND PROFILE	SCALE	H=1:10 000 V=1: 2 000

H = 55M

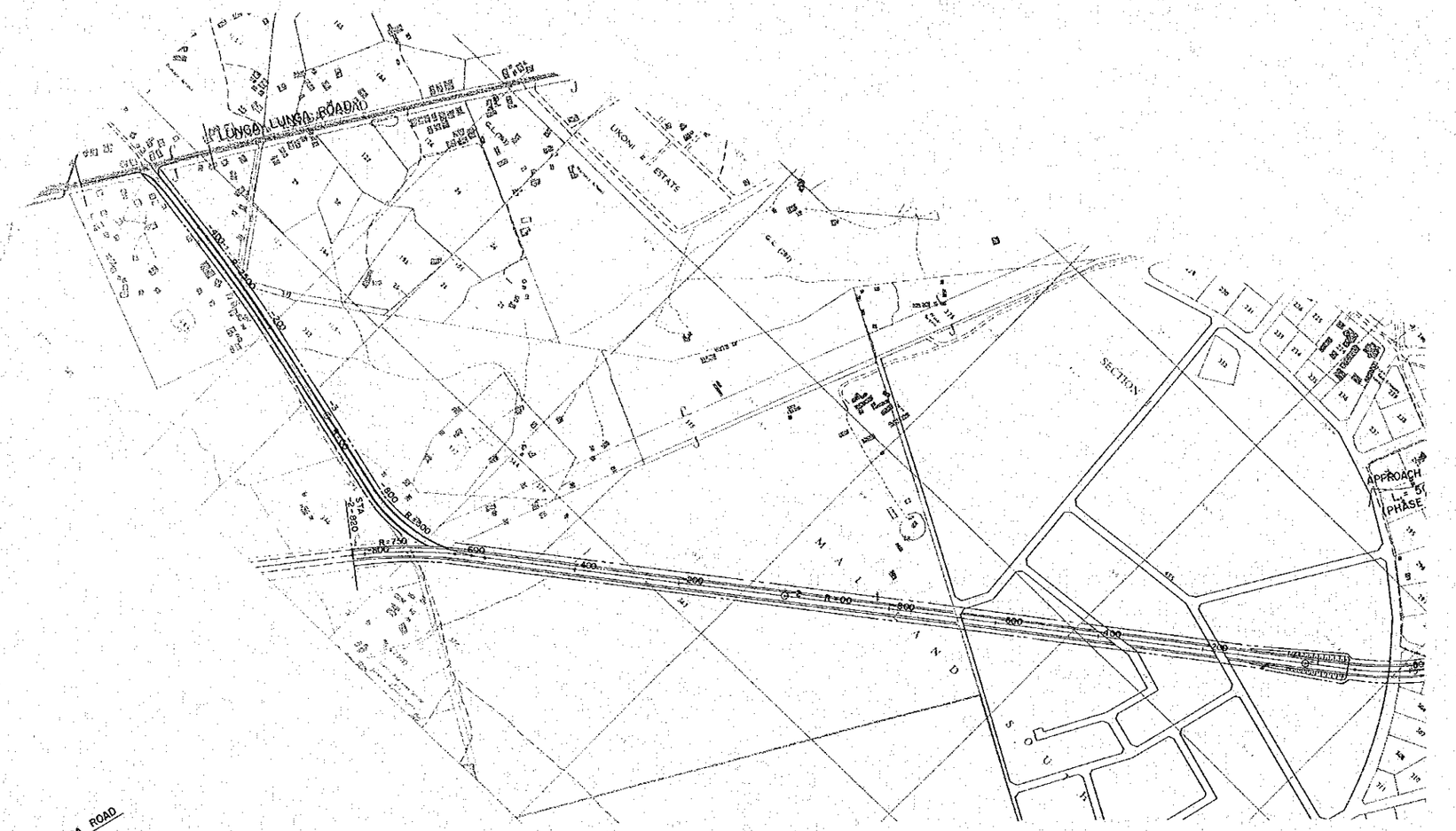

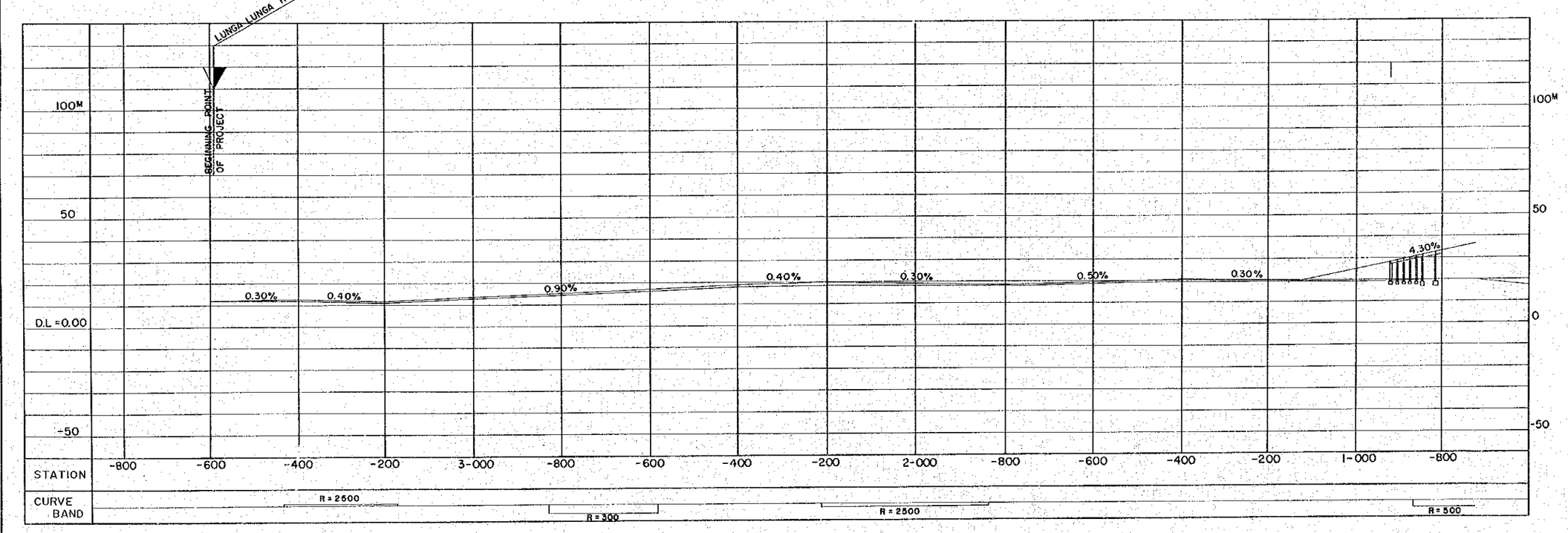

PROJECT	SHEET NO	TOTAL SHEET
LIKONI CROSSING	5	8
PLAN AND PROFILE	SCALE	H:1 10000 V:1 2000

H = 55M

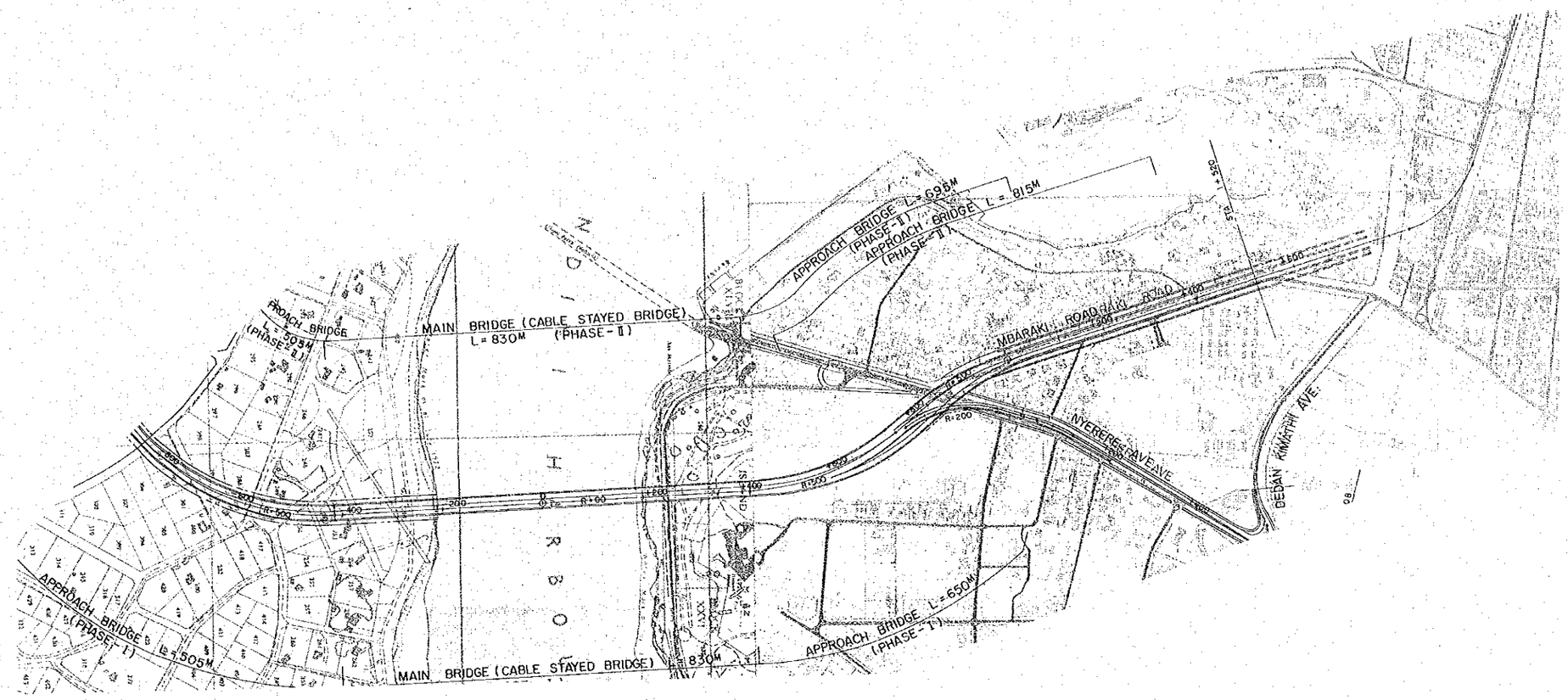

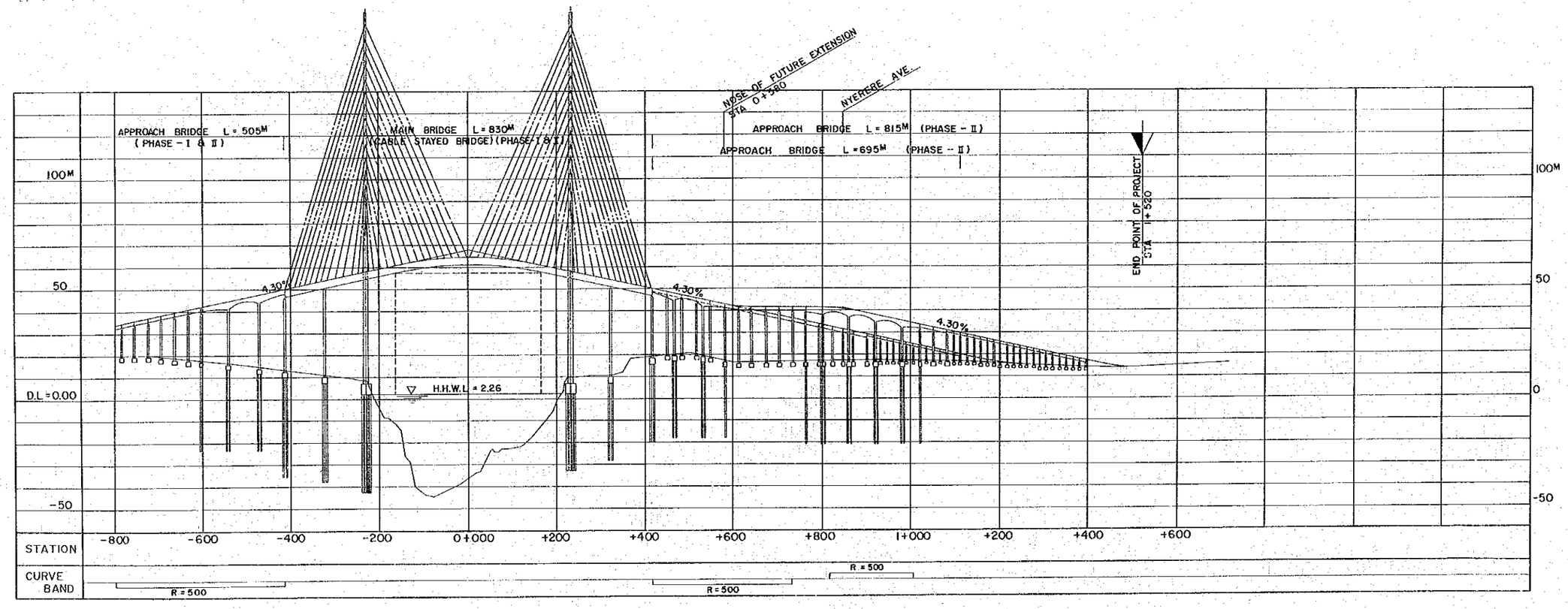

PROJECT	SHEET NO	TOTAL SHEET
LIKONI CROSSING	6	8
PLAN AND PROFILE	SCALE	H:1:10 000 V:1: 2 000

H = 45M

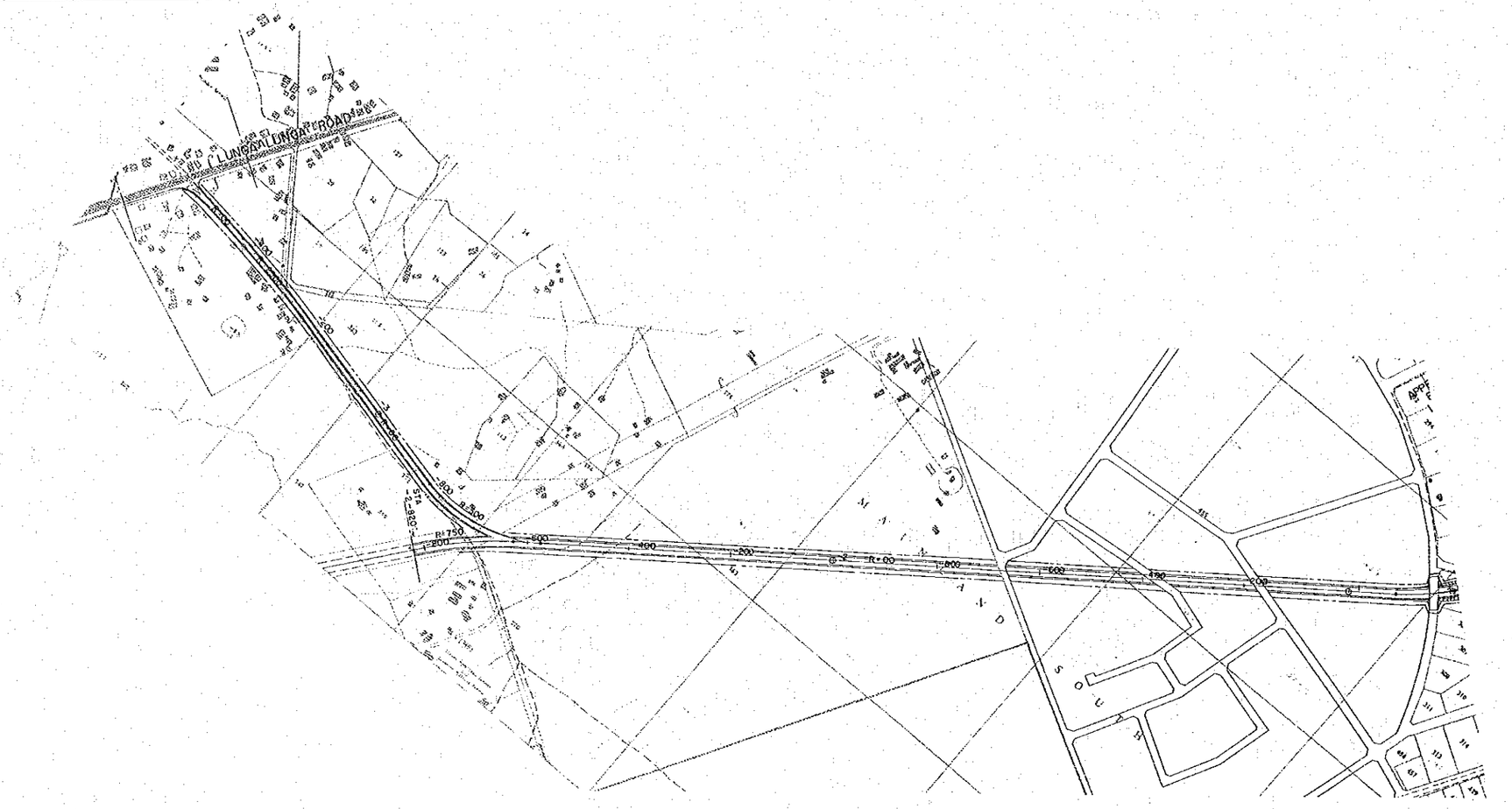

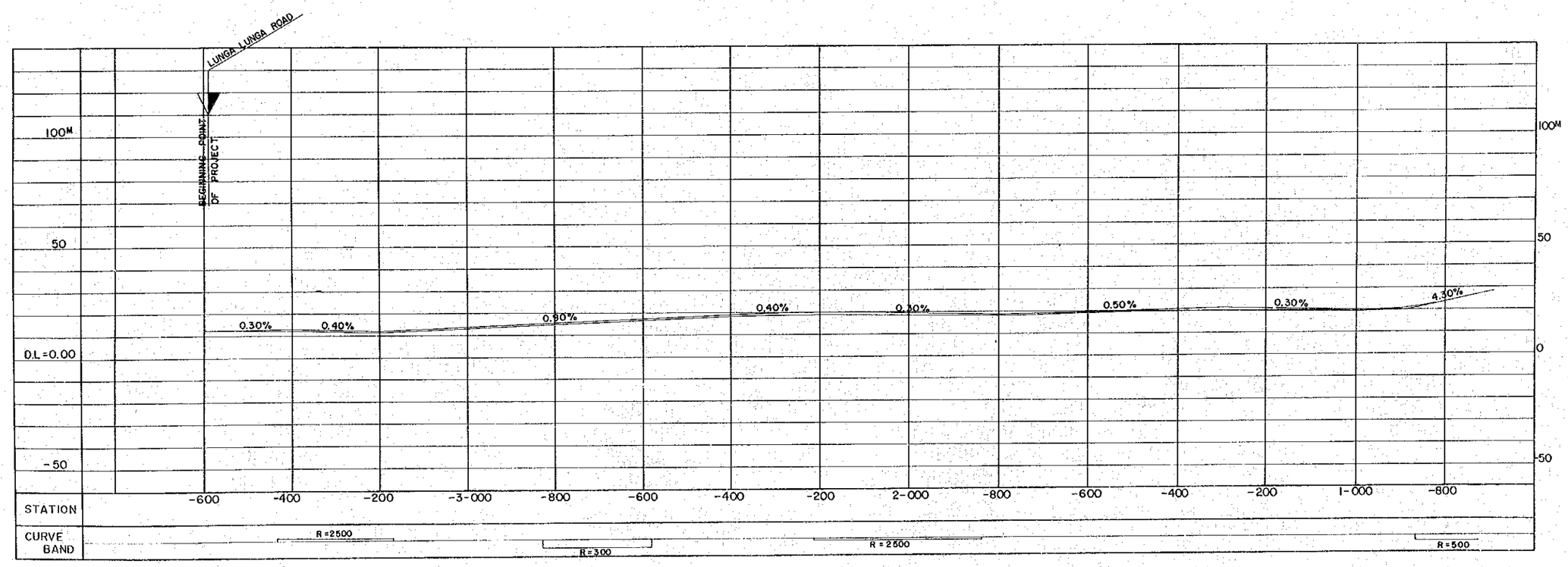

PROJECT	SHEET NO	TOTAL SHEET
LIKONI CROSSING	7	8
PLAN AND PROFILE	SCALE	H:1:10000 V:1:2000

H = 45M

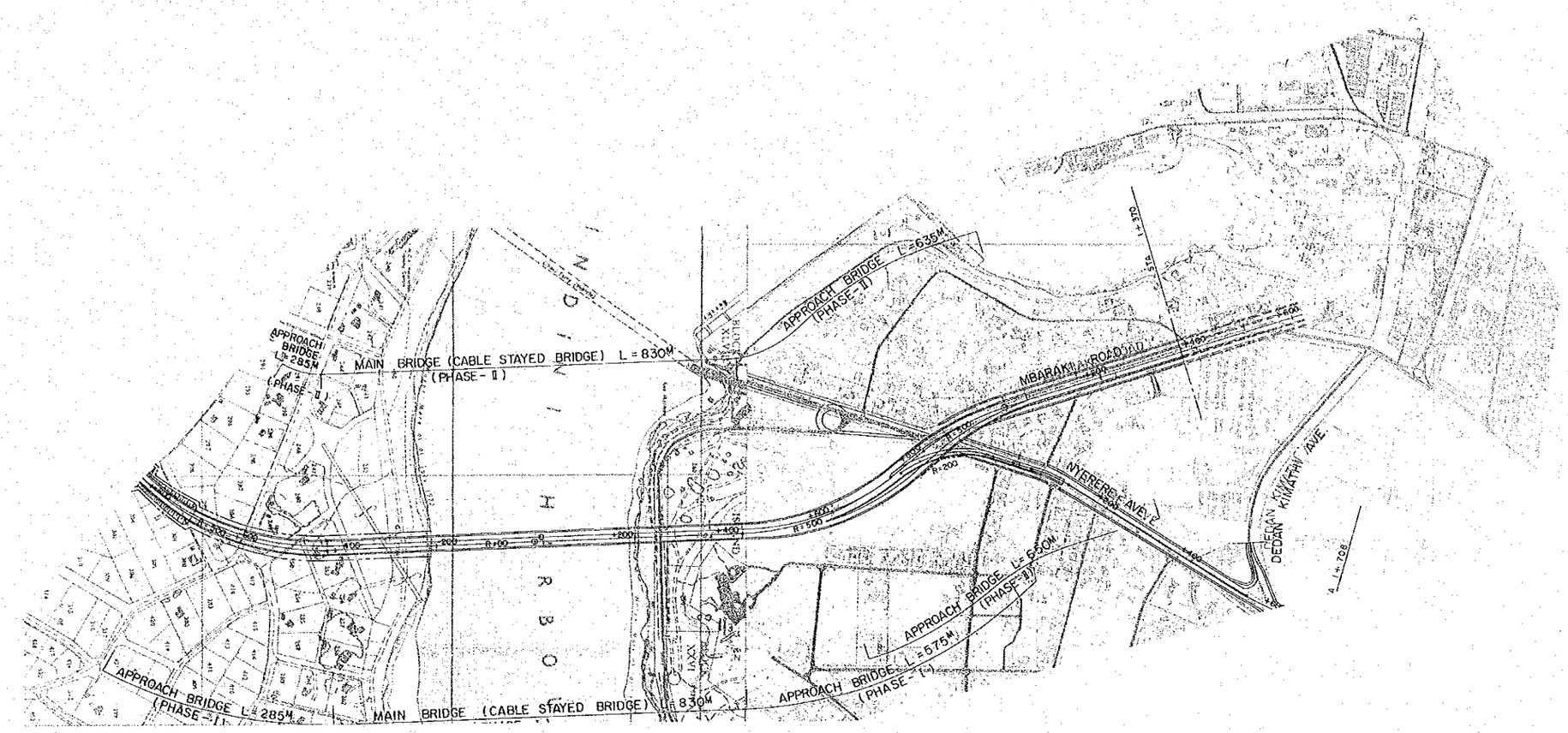

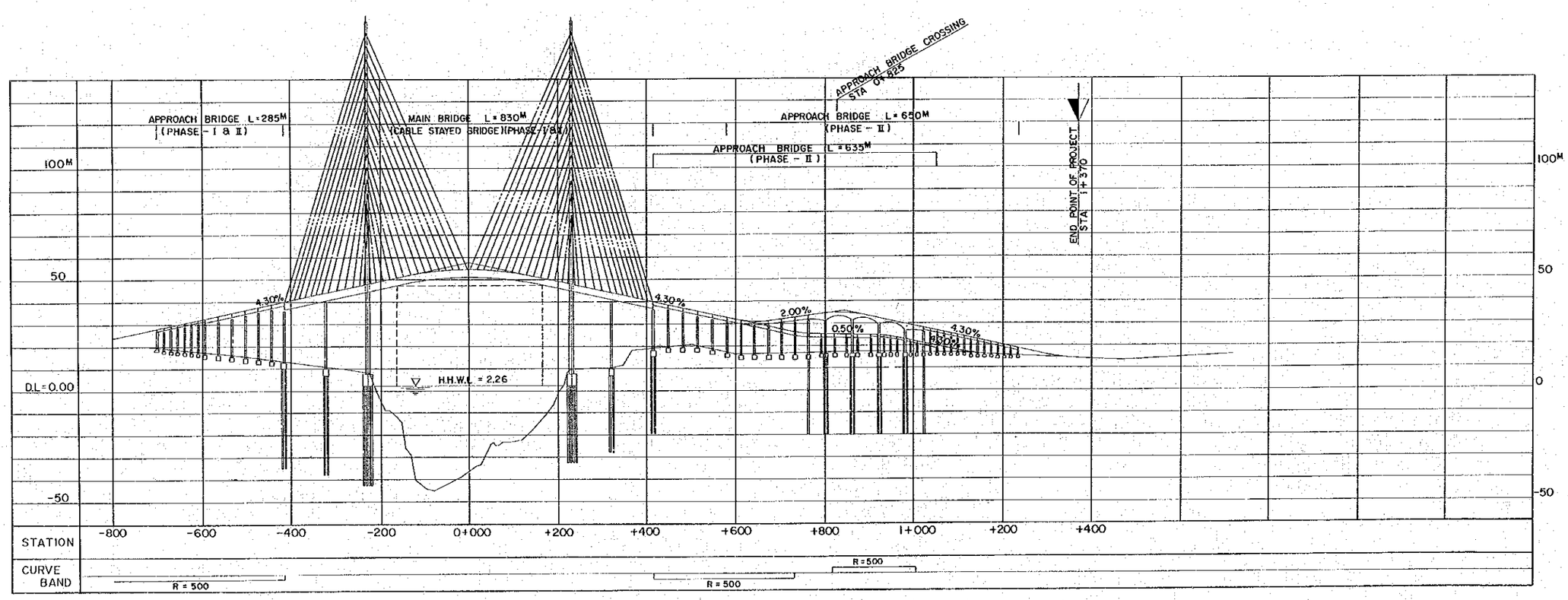

PROJECT	SHEET NO	TOTAL SHEET
LIKONI CROSSING	8	8
PLAN AND PROFILE	SCALE	H:1:10000 V:1:2000

H = 45M

H = 45M
PHASE – I ACCESS

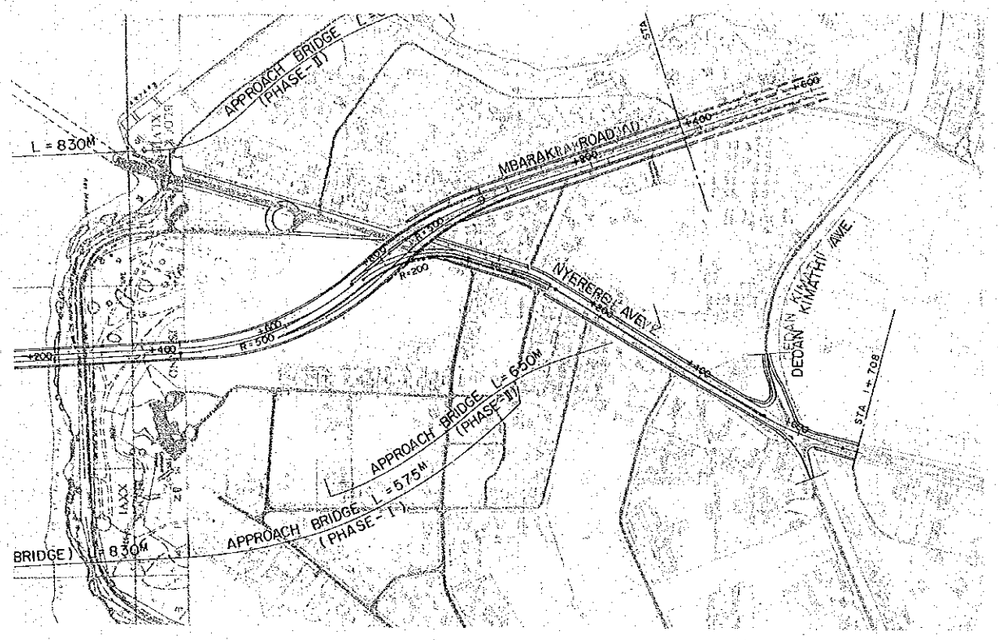

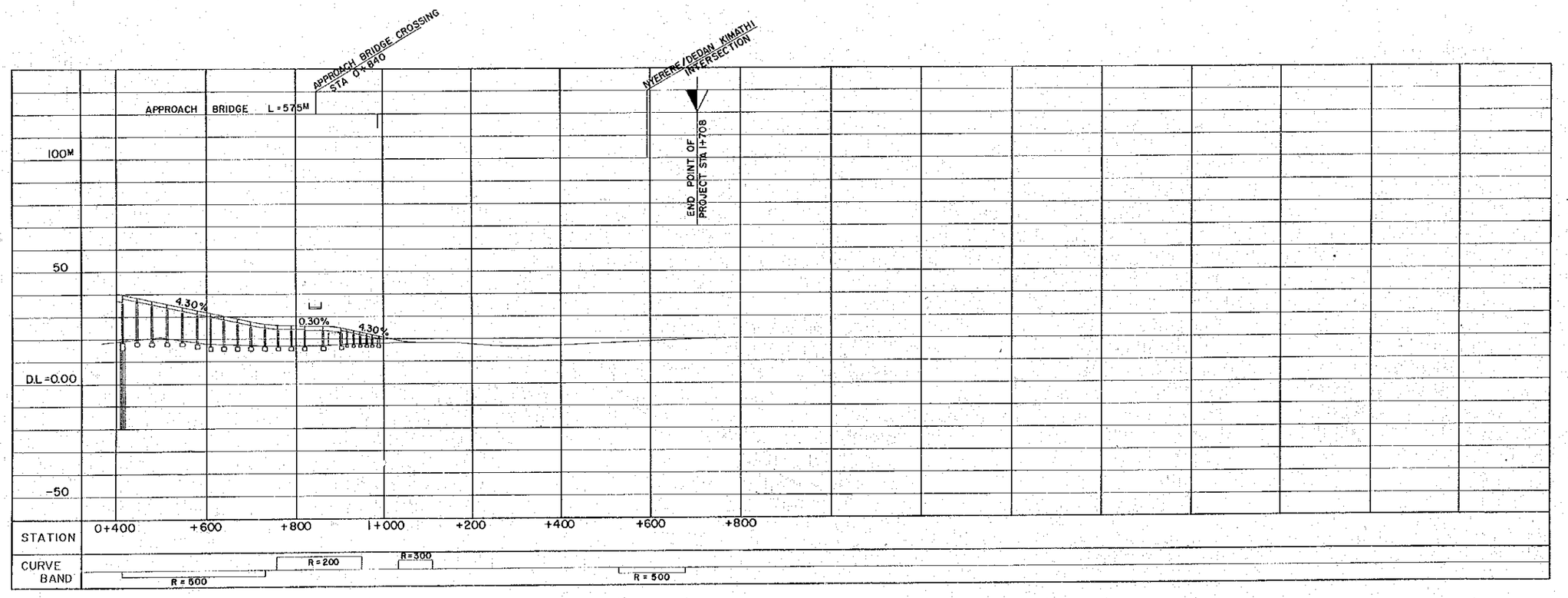

PROJECT	SHEET NO.	TOTAL SHEET
LIKONI CROSSING	1	11
GENERAL VIEW OF MAIN BRIDGE (PC) (NAVIGATION CLEARANCE H = 73.2m)		

GENERAL VIEW OF MAIN BRIDGE
(NAVIGATION CREARANCE H=73.2m)

Unit : Metre

ELEVATION S = 1: 5000

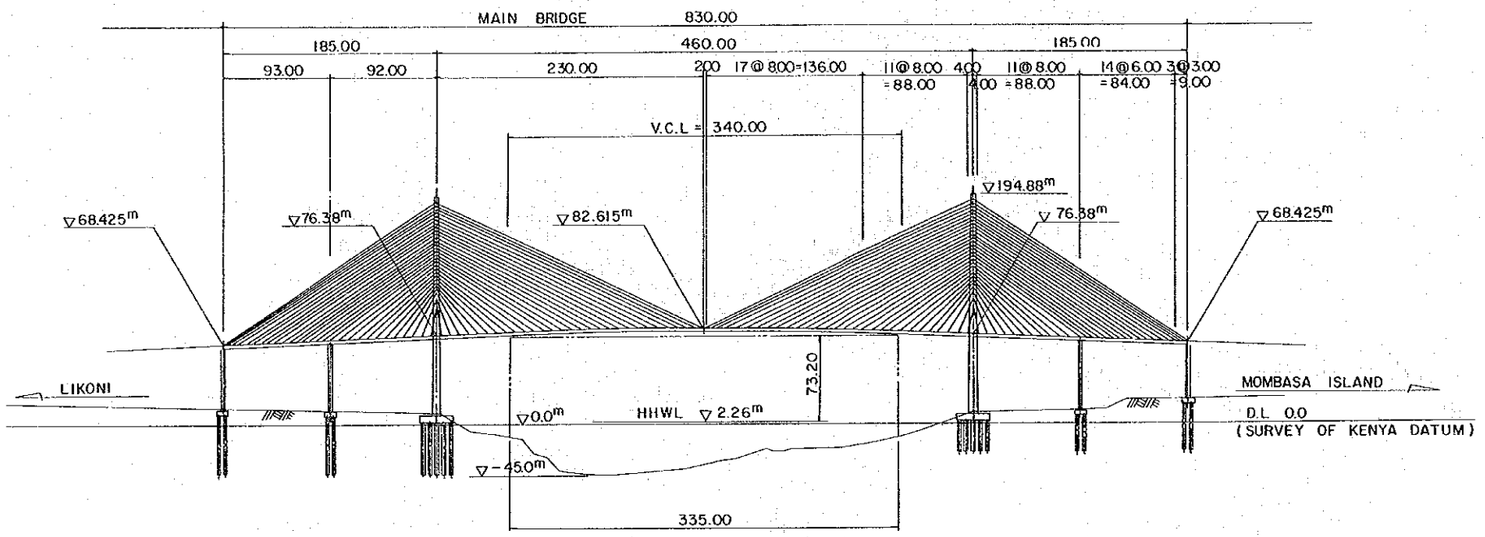

MAIN TOWER S = 1: 2000

Unit : Metre

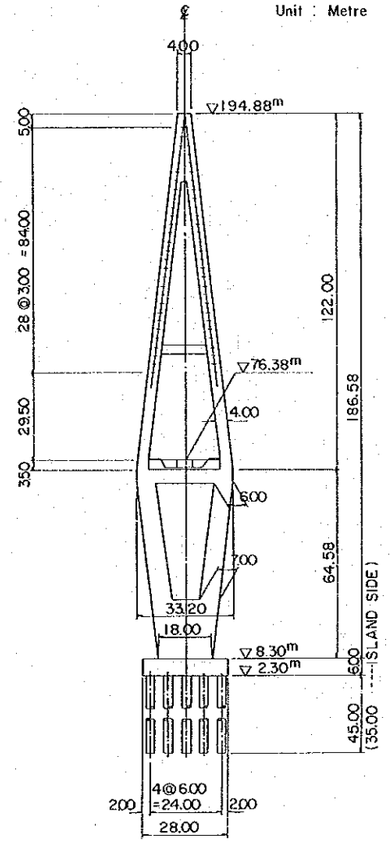

PLAN S = 1: 5000

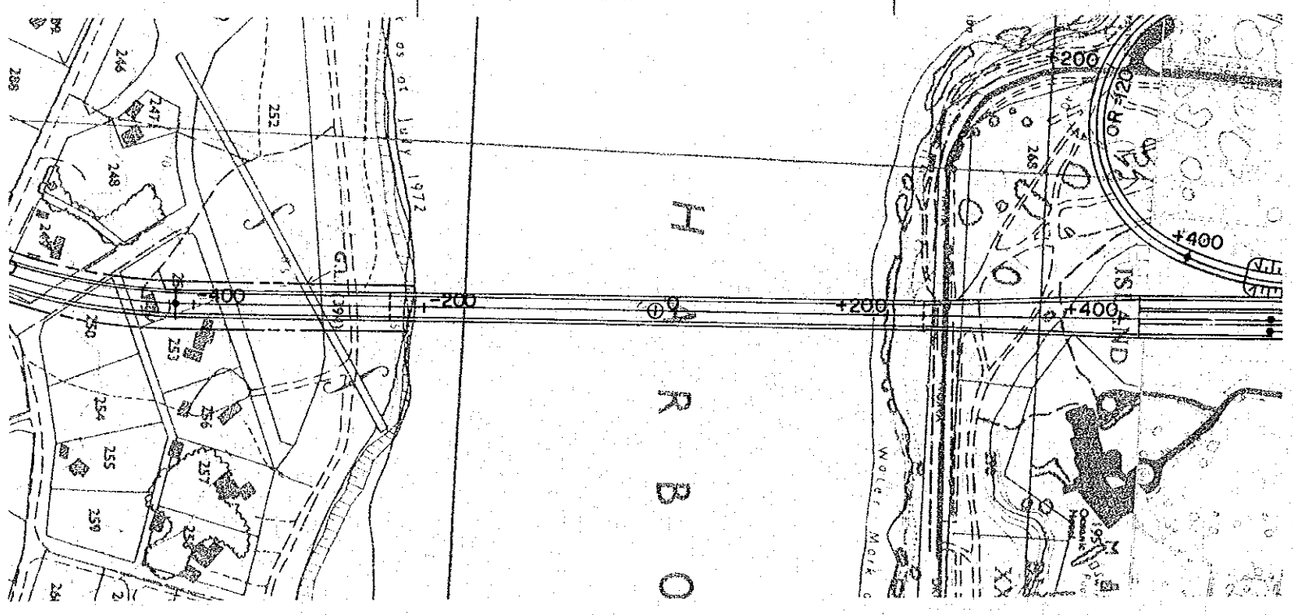

TYPICAL GIRDER SECTION S = 1: 400

Unit : Millimetre

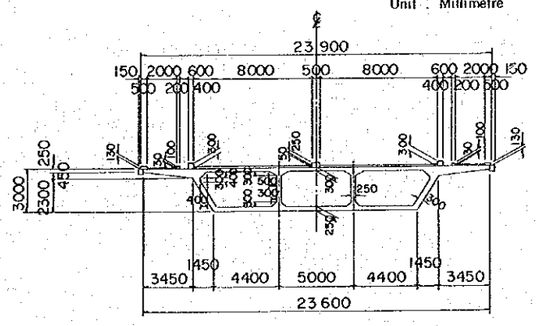

PROJECT	SHEET NO.	TOTAL SHEET
LIKONI CROSSING	2	11
GENERAL VIEW OF MAIN BRIDGE (PC) (NAVIGATION CLEARANCE H = 55m)		

GENERAL VIEW OF MAIN BRIDGE (PC)
(NAVIGATION CLEARANCE H=55m)

Unit : Metre

ELEVATION S = 1: 5000

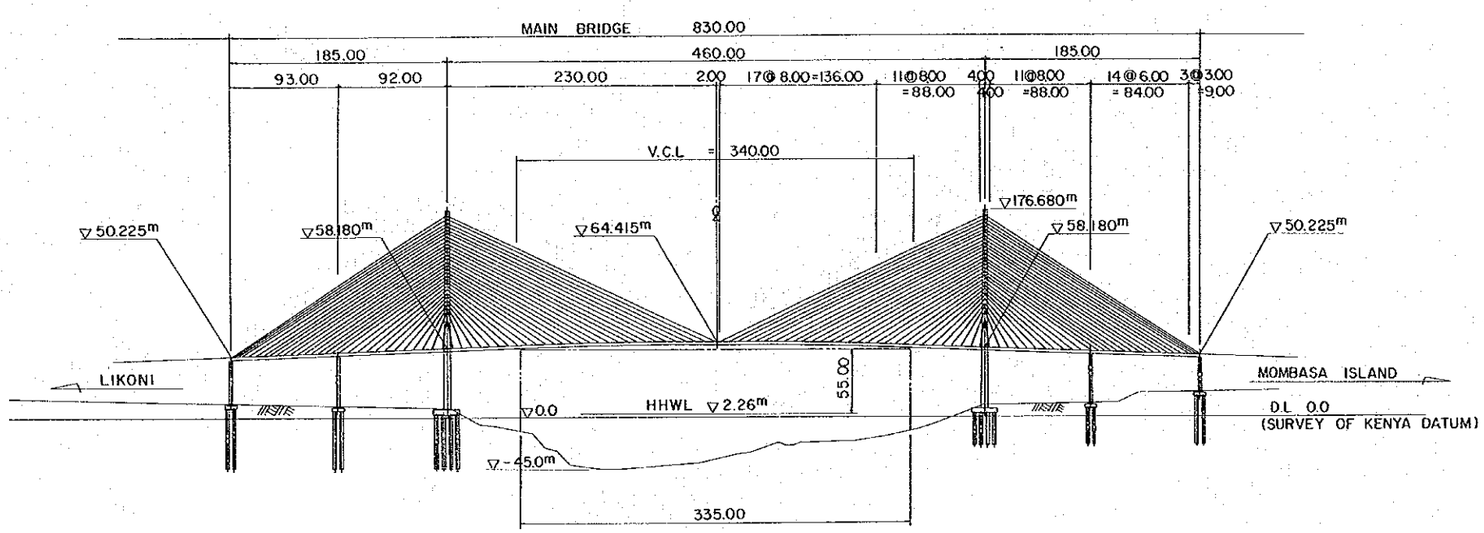

MAIN TOWER S = 1 : 2000

Unit : Metre

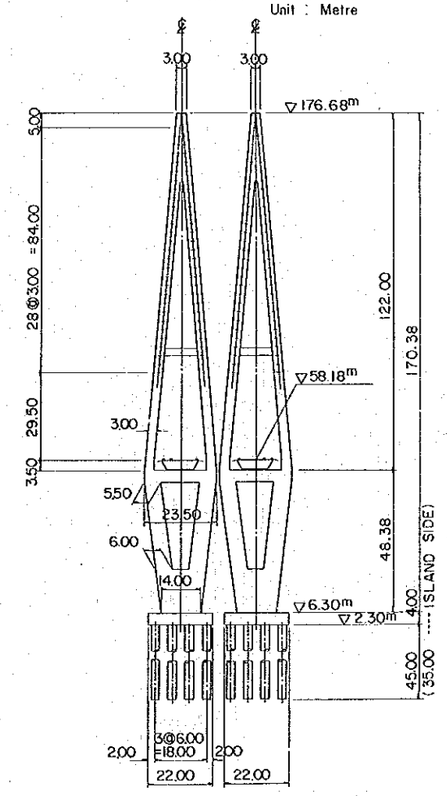

PLAN S = 1: 5000

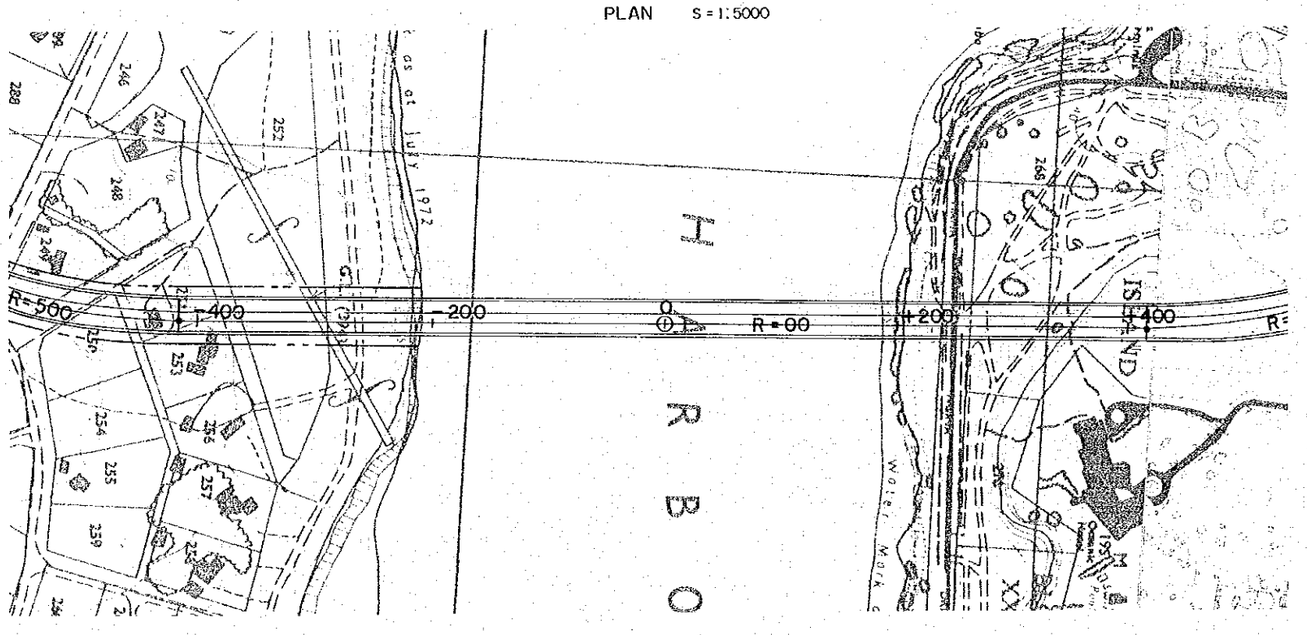

GIRDER SECTION S = 1 : 200

Unit : Millimetre

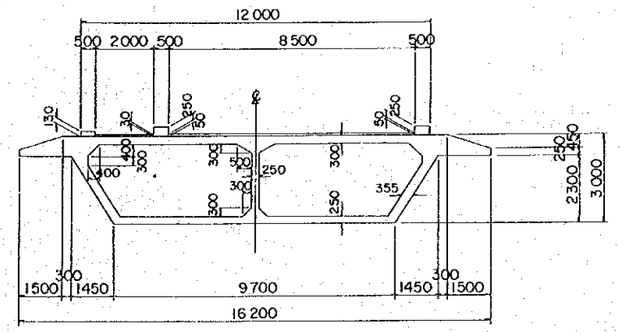

PROJECT	SHEET NO.	TOTAL SHEET
LIKONI CROSSING	3	11
GENERAL VIEW OF MAIN BRIDGE (PC) (NAVIGATION CLEARANCE H = 45m)		

GENERAL VIEW OF MAIN BRIDGE
(NAVIGATION CLEARANCE H = 45m)

Unit : Metre

ELEVATION S = 1: 5000

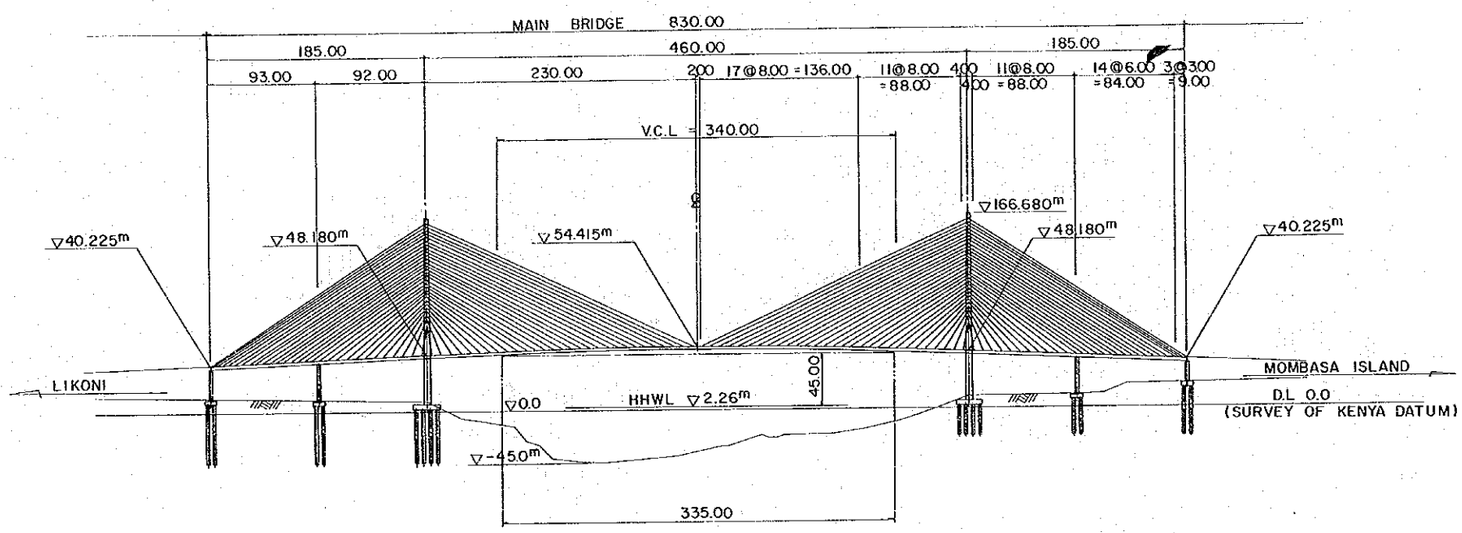

MAIN TOWER S = 1: 2000

Unit : Metre

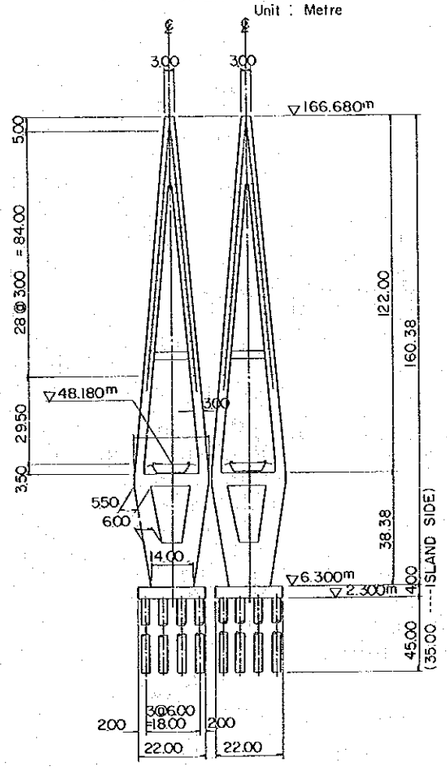

PLAN S = 1: 5000

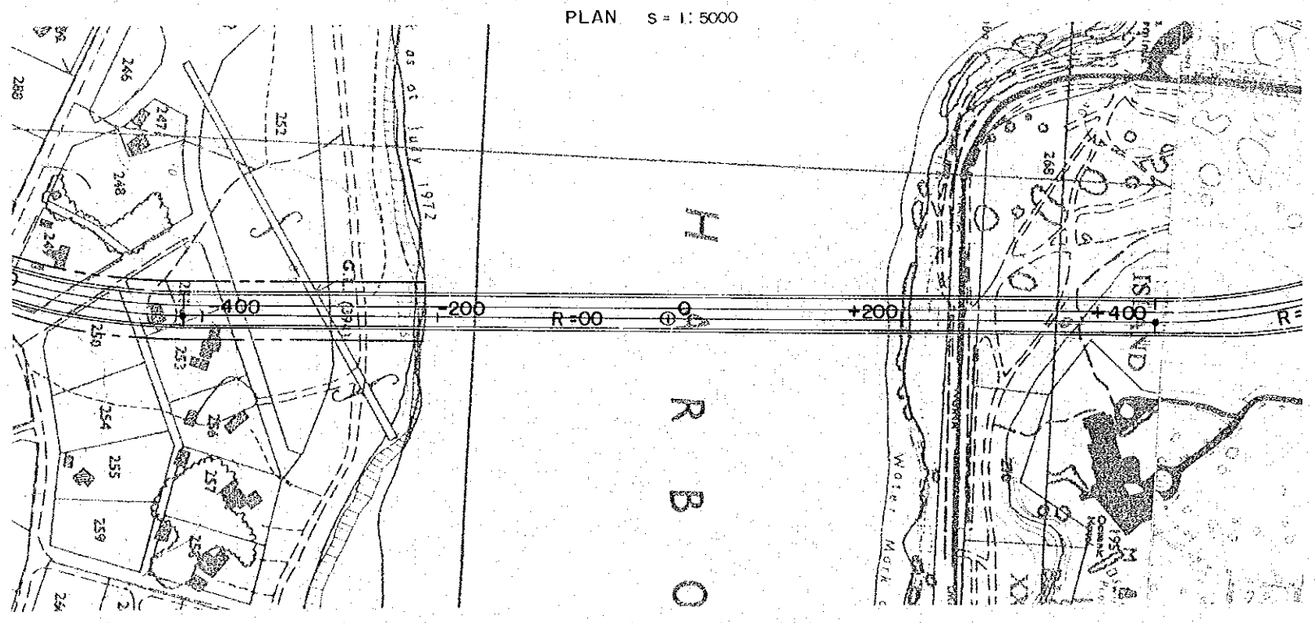

GIRDER SECTION S = 1: 200

Unit : Millimetre

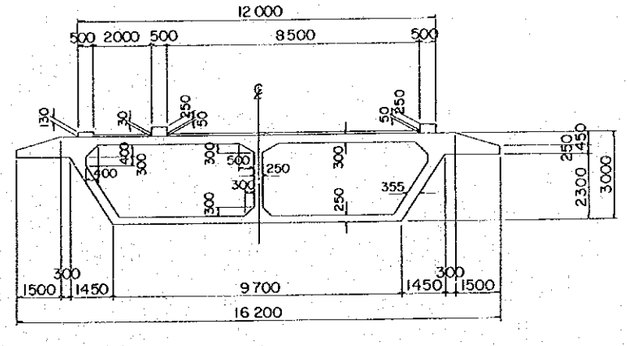

PROJECT	SHEET NO.	TOTAL SHEET
LIKONI CROSSING	4	11
GENERAL VIEW OF MAIN BRIDGE (STEEL) (NAVIGATION CLEARANCE H = 73.2m)		

GENERAL VIEW OF MAIN BRIDGE (STEEL)
(NAVIGATION CLEARANCE H = 73.2m)

Unit : Metre

ELEVATION S = 1 : 5000

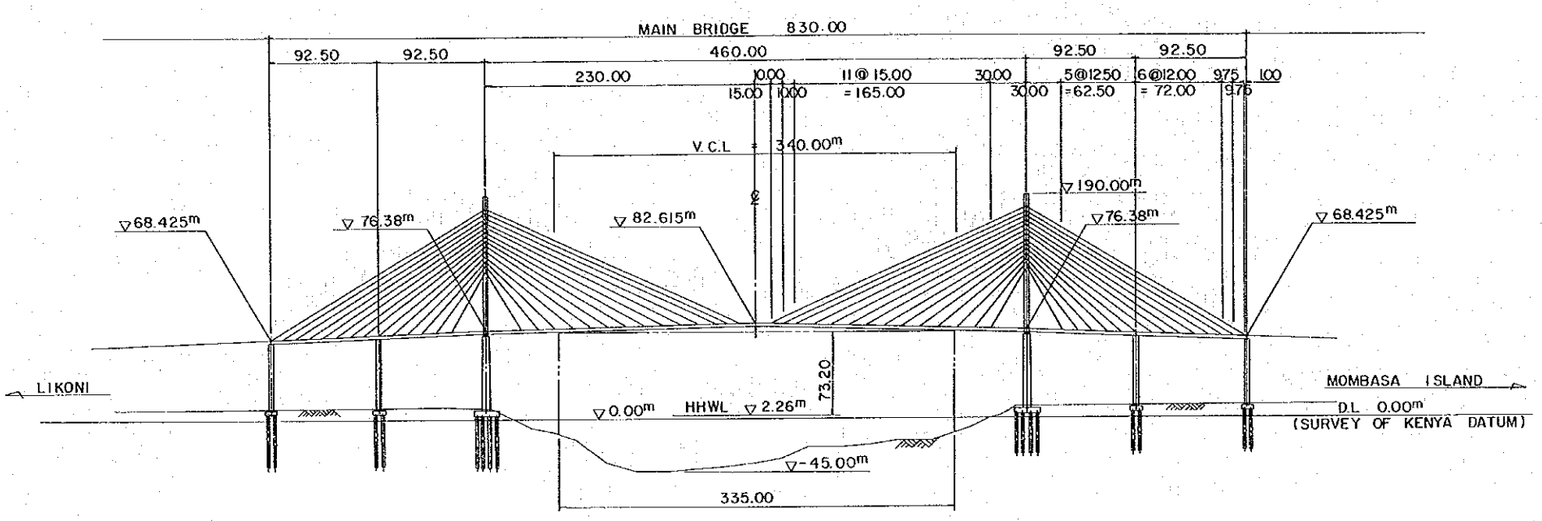

PLAN S = 1 : 5000

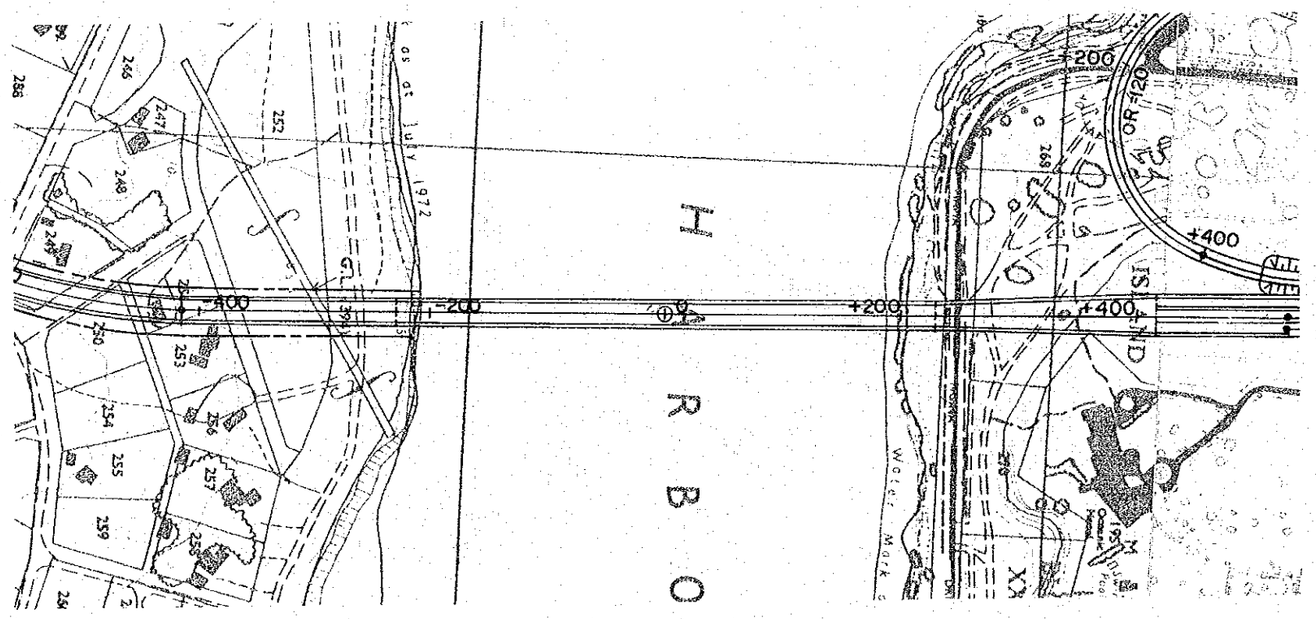

MAIN TOWER S = 1 : 2000

Unit : Metre

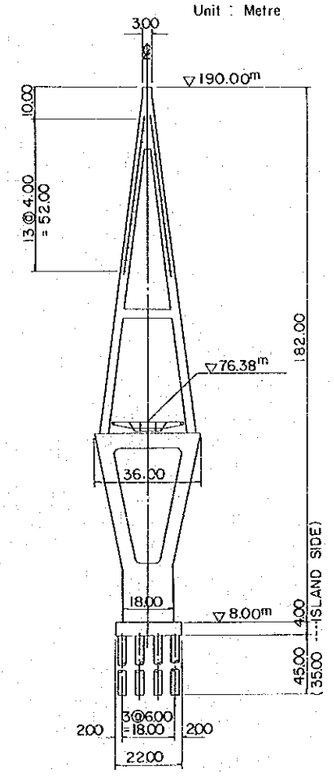

GIRDER SECTION S = 1 : 400

Unit : Millimetre

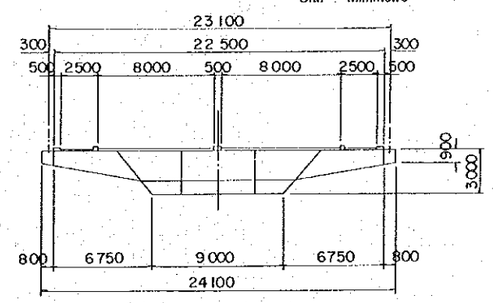

PROJECT	SHEET NO.	TOTAL SHEET
LIKONI CROSSING	5	11
GENERAL VIEW OF MAIN BRIDGE (STEEL) (NAVIGATION CLEARANCE H = 55.0m)		

GENERAL VIEW OF MAIN BRIDGE (STEEL)
(NAVIGATION CLEARANCE H = 55.0m)

Unit : Metre

ELEVATION S = 1: 5000

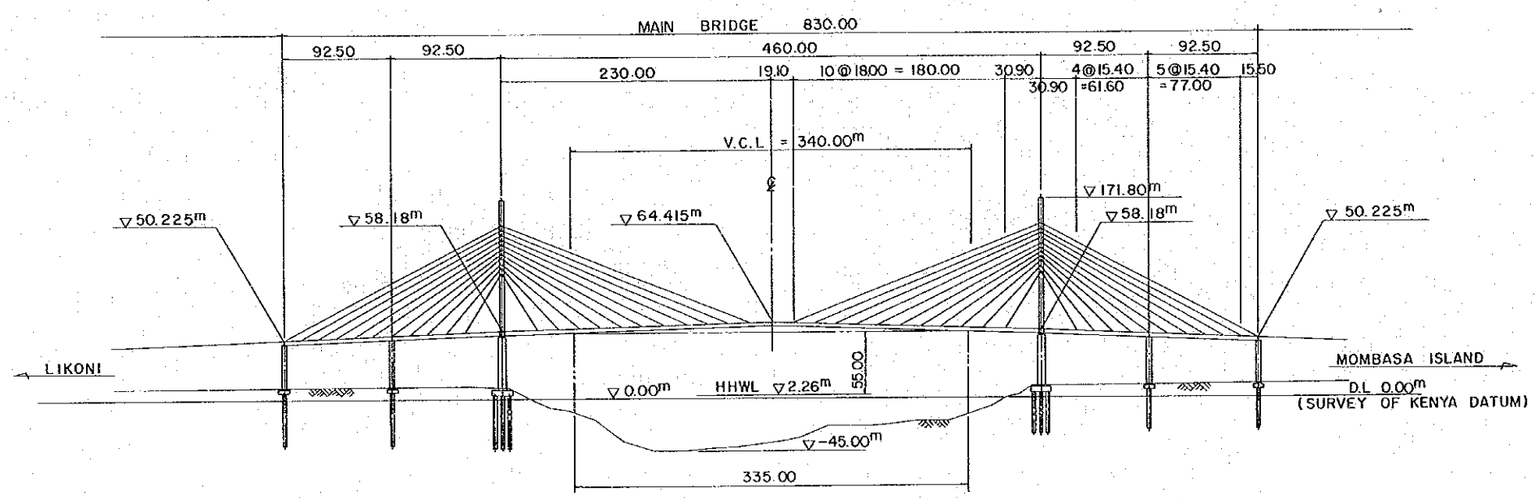

MAIN TOWER S= 1: 2000

Unit : Metre

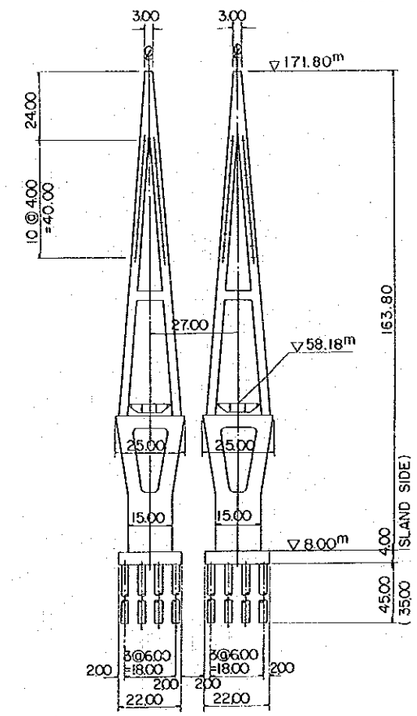

PLAN S = 1: 5000

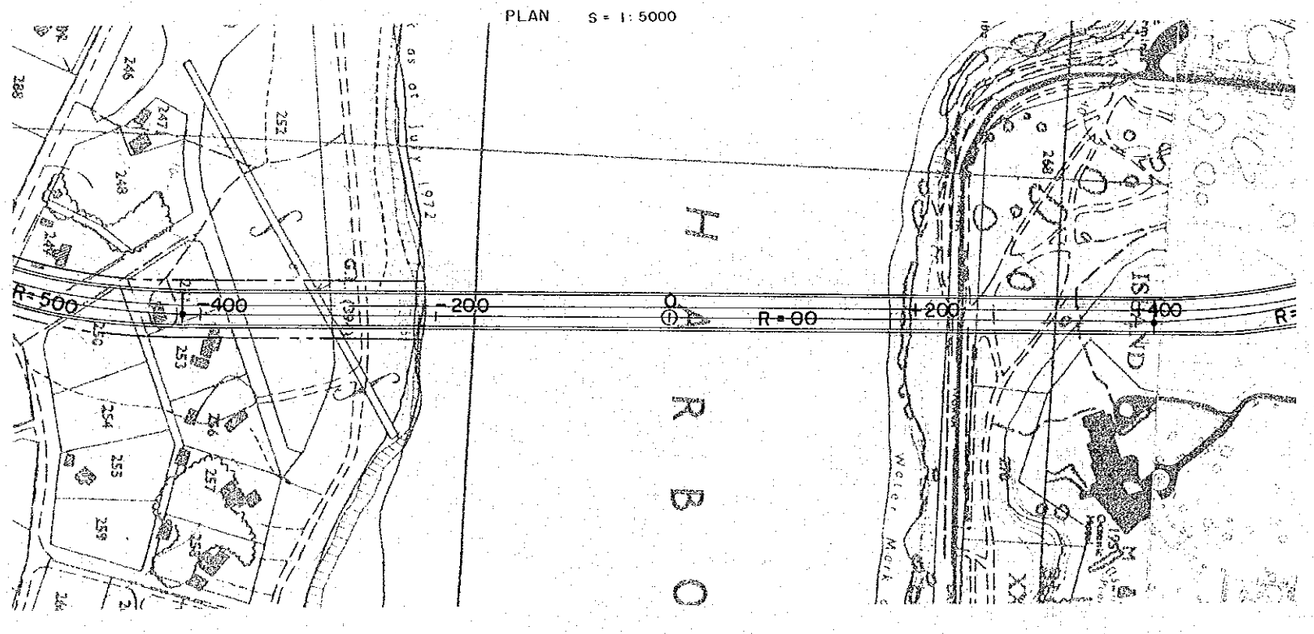

GIRDER SECTION S = 1: 400

Unit : Millimetre

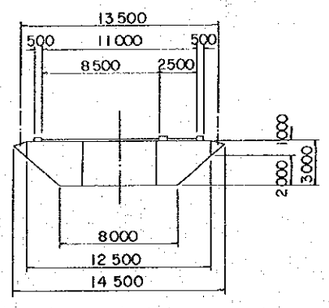

PROJECT	SHEET NO.	TOTAL SHEET
LIKONI CROSSING	6	11
GENERAL VIEW OF MAIN BRIDGE (STEEL) (NAVIGATION CLEARANCE H = 45.0m)		

GENERAL VIEW OF MAIN BRIDGE (STEEL)
NAVIGATION CLEARANCE H = 45.0m
Unit : Metre

ELEVATION S = 1 : 5000

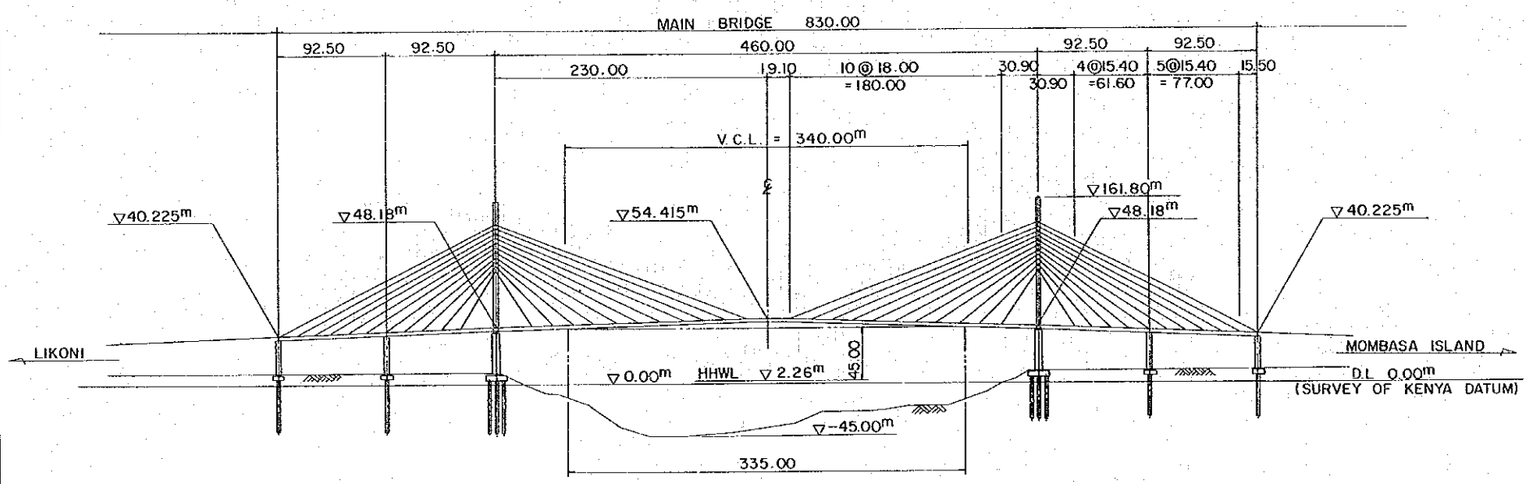

MAIN TOWER S = 1 : 2000
Unit : Metre

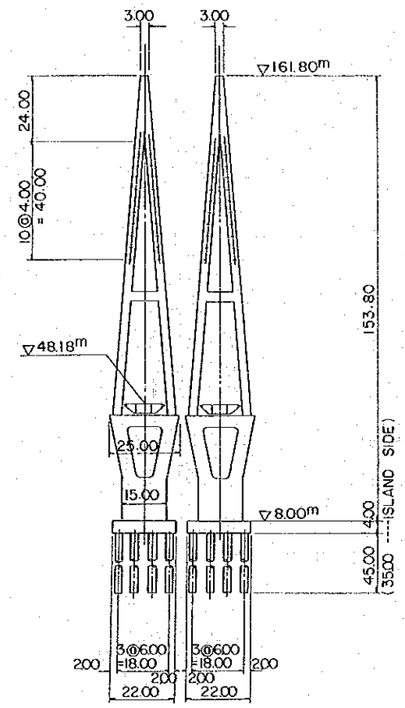

PLAN S = 1 : 5000

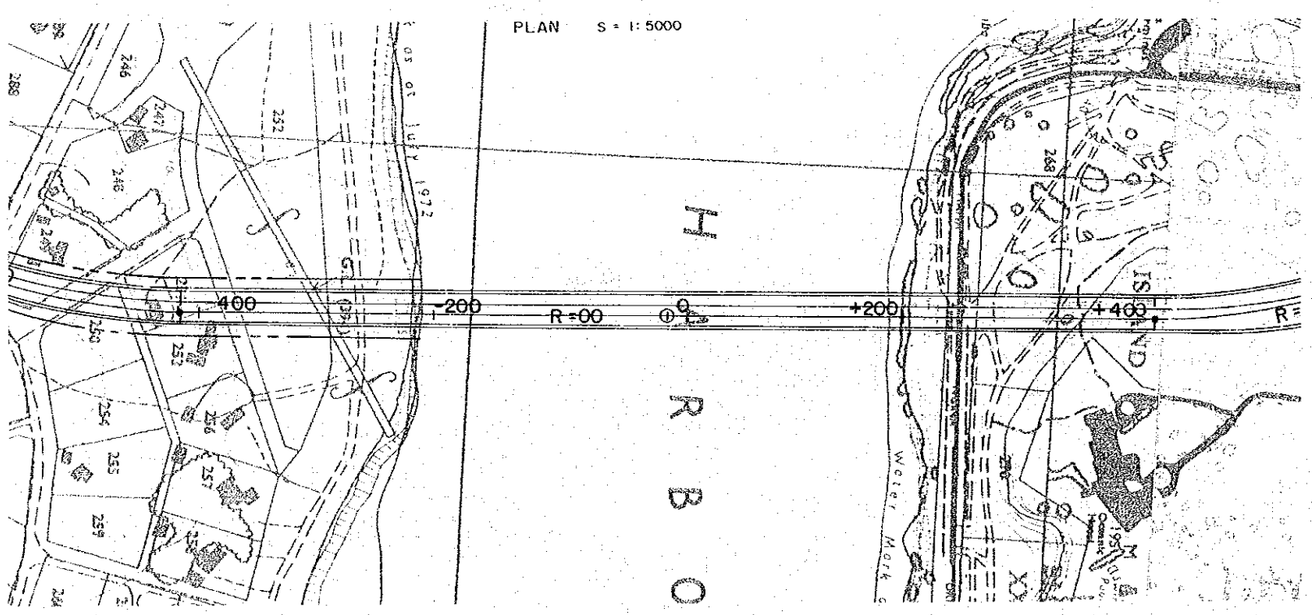
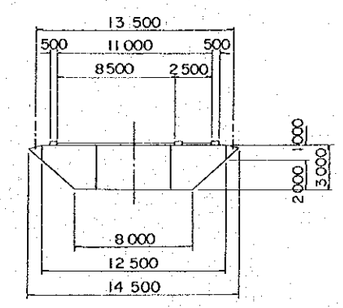
GIRDER SECTION S = 1 : 400
Unit : Millimetre