Chapter 5.

Equipment Rehabilitation Plan

Chapter 5. Equipment Rehabilitation Plan

5.1 Basic Thinking behind Rehabilitation Plan

The rehabilitation plan is based on the following two premises :

(1) Production capacity shall be on an appropriate production scale within the design capacity and its expansion in scale shall not be taken into account.

(2) With the exception of routine maintenance and overhauling, a rehabilitation plan shall be drawn up so as to allow stable operation (continuous operation) for the next several years without large scale repair works.

As previously stated, the existing NCZ plant cannot achieve its original design capacity due to change of quality of raw coal and further-more the expansion plant will come into operation in 1982, which has been taken into consideration.

5.2 Plans Studied to Select the Most Suitable Plan

The following Three plans were studied and compared based on the above mentioned basic thinking.

Table 5-1 Comparison of the Three Rehabilitation Plans

Item	Capacity / Section	Design Capacity	Expected Capacity based on Present Conditions	Capacity of each Plan		
				plan 1	plan 2	plan 3
1	Coal Handling	30,000 T/Y	25,000 T/Y	30,000 T/Y	25,000 T/Y	Standby
2	Gasification	〃	〃	〃	〃	〃
3	H_2S Removal	〃	30,000	〃	〃	〃
4	Raw Gas compressor	〃	〃	〃	30,000	〃
5	Gas Purification	〃	〃	〃	〃	30,000
6	Synthesis Gas Compressor	〃	〃	〃	〃	〃
7	Ammonia Synthesis	〃	〃	〃	〃	〃
8	Nitric Acid Plant	50,000	50,000	50,000	50,000	50,000
9	Ammonium Nitrate Plant	60,000	60,000	60,000	60,000	60,000
10	Auxiliary Facilities	100%	100%	100%	100%	100%

Note 1 : Items 1–6 ; capacity as ammonia

Note 2 : Items 10 ; taking original design capacity as 100%

Plan 1 : Rehabilitation based on original design

Plan 2 : Rehabilitation based on the capacity expected from present conditions

Plan 3 : Raw gas and liquid ammonia are supplied from the expansion plant.

5.2.1 Study and Comparision of the Three Plans

The outlines and features of the three plans are as follows :

(1) Plan 1 : Rehabilitation based on original design

This plan is to restore production capacity as in the original design of 30,000T/Y for Coal Handling through Ammonia Synthesis, 50,000T/Y for Nitric Acid Plant and 60,000T/Y for Ammonium Nitrate Plant.

This plan's advantage and disadvantage are as follows :

Advantage :

a) By this plan, full capacity operations are prssible in all the sections irrespective of the expansion plant and can ensure a production of 60,000T/Y of AN.

b) Gasification is generally difficult to run and the best method of ensuring stable operation is to have a standby. Since by this plan the Gasification is restored to its original design, its capacity should equal that of the Gasification of the expansion plant. Therfore, in terms of performance, Ammonia Synthesis can be stabilized through the following operational system : one existing, the two newly-built and one standby.

Disadvantage :

a) Ammonia production has been maintained at the present 24,000T/Y level due to change in the quality of raw coal, as mentioned in chapter 4. With the present raw coal, Coal Handling and Gasification should be greatly modified in order to make possible ammonia production up to the original design capacity of 30,000T/Y. This modification may require over 2 billion yen. Furthermore, a long period will be required for the modification during which time the loss from the half in operation will be extensive.

b) By this plan, facilities up to Gasification section in both existing and expansion plants will be in operation and running costs will increase.

(2)Plan 2 : Rehabilitation based on the capacity expected from the present conditions

In this plan, existing plant shall be rehabilitated to keep its existing capacity, so the performance of each section will be restored up to present expected capacity. However, Coal Handling and Gasification are limited to 25,000T/Y, so the output of the final product, AN, is limited to 50,000T/Y.

Advantage :

a) Total costs for rehabilitation are considerably reduced and the period of rehabilitation is also shorter than in the Plan 1. Compared to the Plan 1, production costs are also lower.

b) Similar to the Plan 1, existing and expansion plants are independently run, so operation can be stabilized.

Disadvantage :

a) There is an imbalance between capacity of raw gas section and that of the final product (AN) section meaning considerable wastefulness in capacity utilization.

b) Facilities up to Gasification in both existing and expansion plants will come into operation, so running costs will be more than the Plan 1.

(3)Plan 3 : Obtaining the raw material supply from the expansion plant

Coal Handling, H_2S Removal and Raw Gas Compressor are rehabilitated as standby, to a level of potential emergency operation, but they are normally not used. Gasification is rehabilitated as the common standby of other Gasification (3 units) and alternate changeover operation is carried out with these 4 units. This plan requied rehabilitation works so that 24,000T/Y of liquid ammonia, 50,000T/Y of nitric acid and 60,000T/Y of ammonium nitrate can be stably produced with present facilities, by using 24,000T/Y (as ammonia) of raw gas free of H_2S and 4,300T/Y of liquid ammonia supplied from the expansion plant.

Advantage :

a) Rehabilitation work costs are minimum.

b) The output of the final product (AN) and compound fertilizers is the same as in the Plan 1 and, moreover, as raw gas for ammonia is only produced by the expansion plant, production costs are the lowest.

c) In the event the raw gas section of the expansion plant broke down, production of existing plant can be maintained by operating raw gas section on standby.

Disadvantage :

a) This Plan excessively depends on the surplus capacity of the expansion plant and therefore the following is likely to occur if the expansion plant is temporarily suspended.

1)Less stable operation than the Plan 2

2)Lower output than the Plan 2

b) Existing Gasification is rehabilitated to be ready for use as the common stanby, but it is not a perfectly common spare due to a smaller capacity than the other 3 units.

5.2.2 Selecting the Most Suitable Plan

As a result of study of the three plans, the feasibility study team selected the Plan 3 as being the most suitable in being able to maintain a final product output of AN of 60,000T/Y, as well as being the cheapest in terms of rehabilitation works and running costs.

5.3 Summary of Sectionwise Rehabilitation Plan

The Rehabilitation Plan based on the Plan 3 is as follows :

Coal Handling	:	Rehabilitate to a level capable of running only in an emergency. Use as a standby and not for normal service.
Gasification	:	Rehabilitate completely in accordance with present conditions and use alternately as a standby of the Gasification of the expansion plant
H_2S Removal and Raw gas compressor	:	Same as Coal Handling

Gas Purification, Synthesis gas compressor and Ammonia Synthesis	:	Fully rehabilitate to have the initial design capacity, obtain the supply of raw gas free of H_2S from the expansion plant and produce 24,000 T/Y of liquid ammonia (Production capacity as a facility : 30,000T/Y)
Nitric Acid Plant and Ammonium Nitrate Plant	:	Fully rehabilitate to have the initial design capacity, obtain an additional supply of 4,300T/Y of liquid ammonia from the expansion plant together with 24,000T/Y from Ammonia Synthesis as above and produce 50,000T/Y of nitric acid and 60,000T/Y of ammonium nitrate

5.3.1 Scope of Repair and Rehabilitation

The equipment intented for repair or rehabilitation in the present plan are as follows :

(1)	Section	301	Coal Handling
(2)	〃	302	Gasification
(3)	〃	303	H_2S Removal
(4)	〃	304-308	Gas Purification
(5)	〃	309	Ammonia Synthesis
(6)	〃	310	Compression
(7)	〃	311	Air Separation
(8)	〃	401	Nitric Acid Plant
(9)	〃	501	Ammonium Nitrate Plant
(10)	〃	601	Water Tretment
(11)	〃	602	Boiler
(12)	〃	603	Electric Receiving/Distribution/Emergency Power
(13)	〃	604	Water Intake Station
(14)	〃	605	Effluent Treatment

Based on the result of its survey and discussion with NCZ officials, the feasibility study team made up a plan for rehabilitation with regard to machinery, instruments, electricals and piping.

Details are as given in the Appendices as follows : –

Appendix 8 : "Result of Check/Inspection and Rehabilitation Work"

* This appendix contains a summarized of the "Rehabilitation Work" relating to renewal, new installation, parts replacement, overhaul, internal cleaning, etc. for each machinery and equipment.

Appendix 9 : "List for Renewal and Newly Installed Equipment"

Appendix 10 : "List for the Parts of Equipment tobe Replaced"

* This appendix covers details of the parts which should be replaced.

5.3.2 Problems Involved in the Repair and Rehabilitation Works

There are many unknowable factors in the rehabilitation works, because of its nature, which might cause various problem in execution.

(1) The machinery and equipment which have been hard driven for many yeays may unknown defects within, and it is difficult to identify these defects precisely through external inspection and fully to prescribe the extent of repair and rehabilitation.

(2) Unlike the new construction works, in the repair/rehabilitation works, there are additional works of adjustment and care-taking of existing equipment/machinery which are accompanied by connection piping, insulation and connection wiring works ; and also removal and restoration of the neighbouring macninery and equipment in order to carry in or out equipment/machnery. It is difficult to grasp fully the amount of these works.

(3) Present equipment/machinery will be run from now on up to the time rehabilitation works are executed. During this period there is a possibility that the extent of rehabilitation work may increase through further deterioration, operation failure, unforeseen accidents, etc.

(4) Where partial restoration is carried out, new parts and materials will be mechanically joined to old parts and materials, so the repaired equipment, will not come up to the standard of a completely new one in terms of reliability.

Taking account of the above, the following are taken into consideration in the rehabilitation works :

Chapter 6.

Schedule for Rehabilitation Works

Chapter 6. Schedule for Rehabilitation Works

6.1 Scope of the Project

This project should be carried out on a full turn-key basis including engineering, procurement and transportation of machinery/equipment/materials and site works. The scope of intended machinery and equipment for the rehabilitation works shall be in accordance with Appendix-8.

6.2 Procurement of Machinery/Equipment and Materials

The results of the second survey reveal the possibility of locally obtaining building repair matetials (slates, shape steel), and cement, sand, gravel, etc. for repairing the machinery's foundations.

Tanks made of general structural steel, etc., however, would seem to be hardly obtainable locally judging from the capacity and facilities of manufacturers located near Lusaka. Consequently, general construction materials shall be procured in Zambia, while equipment, machine parts, special construction materials, tools, construction equipment, etc. shall be procured outside Zambia.

6.3 Inland Transport of Equipment and Materials

Zambia, which is an inland country, can be reached by various routes which pass through Tanzania, Zaire, Angola, the Union of South Africa, Zimbabwe, Mozambique, etc., among which the Tanzania route is the most advantageous because of short distance. This route comprises two alternatives — railway and road ; and for transporting cargo bound for Zambia, the railway route via Tanzania will be the most economical and effective.

6.3.1 Railway Route

Though details are given in Fig. 6−1, the outline of the railway route is as follows, covering a total distance as great as 2,100km :

Dar es Salaam (Tanzania)

↓ 1859km (Tanzania Zambia Railway Authority : Tanzam Railway)

Kapirimposhi (Zambia)

↓ 185km (Zambia Railway)

Lusaka (Zambia)

↓ 50km (Zambia Railway)

Kafue (NCZ site)

The Tanzam Railway has the following rolling stock :

Locomotives	85 (39 in actual service now)
Freight cars	1,800 (1,470 in actual service now)

Time required for transporting cargo from Dar es Salaam to Kafue is about three weeks, which is a week between unloading the cargo and despatching freight cars' travelling time up to Kafue, and at present 30 to 40 days seem to be necessary.

As for the freight schedule, priority shall be given to those cargoes necessitated by the Zambian Government. This project shall be given this priority and the schedule was made up based on this route.

The transportation limit is 50 ton gross weight and 12.8m long x 2.3m wide x 2.8m high, which would be sufficient for the purposes of transporting cargoes for this project.

6.3.2 Roads

At present all non-standard railway cargoes and emergency materials are carried by road routes running almost parallel to the railway route.

The Tanzam Highway linking Dar es Salaam and Kafue is a paved highway 6−9 meters wide, two-lane traffic on each side, which would allow transportation of heavy materials.

In this area, the Zambia-Tanzania Road Service handles almost all cargoes ; this firm, a public corporation jointly capitalized by the Zambian Government, Tanzanian Government and Italian firms, possesses a fleet of about 500 trucks, trailers, etc., 180 of which are in actual service now.

This project shall, in principle, be based on the railroad route, but the road route shall also be employed in case of emergency, since the former takes about three weeks while the latter could make it shorter by a week.

6.3.3 Unloading and Storage at Site

All cargoes carried by rail shall be unloaded on the NCZ's siding ; and cranes and trucks required for cargo unloading shall be the vehicles for the rehabilitation works.

As for storage of machinery/equipment/materials, an appropriate space will be set as a storage area in the complex of NCZ ; and machine parts, electrical items, instruments, and other construction materials, which should be kept indoors after unpacking and inspecting, shall be kept in the existing warehouse in the complex.

6.4 On-site Works

The rehabilitation works comprise the follwing :

1) Replacing
2) Parts replacement or partial repairing
3) Overhauling
4) Other works

6.4.1 Replacing Work

This is designed for replacing existing equipment, piping, instruments,etc., with new ones. The principal items comprise Ash−Extractor (302−G06), Absorber (303−T01), Ammonia Evaporator (401−E01), instrumentation panels, etc.

6.4.2 Parts Replacement or Partial Repairing

This comprises replacing tube-bundles of heat exchangers, replacing the lower part of Oxidation Towers (401−T01~T03), replacing the tubes of Tubular Boiler, (302−E02), etc.

6.4.3 Overhauling

This is aimed at opening/inspecting and replacing parts of the compressors (section 310) and Air Separation (section 311) , etc.

6.4.4 Other Works

All related works involved in those mentioned above which comprise the following : making and restoring of openings in buildngs for taking equipment in and out, provisionally removing and restoring connection piping, heat insulating works, temporary works for safety purposes, cleaning prior to starting works, etc.; these should represent a fairly large work volume in the entire rehabilitation works.

6.4.5 On-site Work Man-power

The results obtained by the second survey suggest the following scale of the rehabilitation works.

Total weight of equipment and materials (excluding construction facilities)
: about 1,250T (net)

Total man-power : about 16,000 man-days

The total man-days given above shall be allotted according to the work schedule into a chart as shown in Fig.6–2, which requires assigning about 170 labourers at the peak and about 80 man-months of indirect labour (clerks, typists, boys, drivers, etc.) to be additionally required.

Labour should be mobilized at the ratio of 1 : 1 for skilled and un-skilled labour.

Securing as many as 170 labourers at the peak would seem to pose no problem as far as the number of people is concerned, through directly employing them from in and around Kafue or getting them supplied from subcontractors in Lusaka.

Also from the point of view of the kind of works required, since the rehabilitation works largely comprises such simple works as installing machinery, etc., the necessary labour would seem to be fairly easily obtainable. However, such specialized labour as bricklayers, welders and instrument fitters had better be employed through subcontractors.

6.4.6 Mobilization Scheme for Staff, Supervisors and Technicians

1) NCZ Staff and Supervisors

As shown in Fig.8−1, a total of 96 man-months (16 men × 6 months) will be necessary.

2) Contractor's Staff, Supervisors and Technicians

The personnel repuired shall be as follows taking into consideration the volume as well as the complexity of the works and the periods of despatching by kind of job are given in Fig.6−3:

Staff :	49.5 man-months
Supervisor :	20 man-months
Technicians:	62 man-months

6.4.7 Construction Equipment and Tools

Construction equipment, vehicles and tools shall be entirely imported, as detailed in Table 6−1.

6.4.8 Utilities

Since the rehabilitation works are to be carried out in the existing plant, the power supply for construction shall be obtained from the existing switchboard at 220V/50Hz/single-phase. As for water supply, potable water of 1.5 bar water pressure and industrial water at 3−6 bar will be obtained from the existing water line valves in the complex.

6.4.9 Utilizing NCZ's Existing Facilities

NCZ's existing facilities shall be used as follows :

1) Storage Area	about 5,000m²
2) Parking Lot	about 1,000m²

3) Temporary Shop Area about 1,000m²

4) Contractor's Site Office for 30 people

5) Warehouse 350m² (roofed)

6) Clinic
To be used for first-aid purposes

7) Maintenance Work Shop
Facilities and equipment shall be used whenever necessary.

8) Fire-extinguishing Facilities
NCZ's fire-fighting system shall be mobilized in an emergency the same as when the plant is in operation.

9) Communication Equipment
In-house telephones, outgoing lines and telexes may be used.

10) Guard House
A guarding service of the complex shall be carried out by NCZ throughout the work period.

6.4.10 Sub-contractors

For carrying out on-site works, employing local subcontractors shall be advantageous from the viewpoint of employment and labour control of local employees. Some sub-contractors are shown in Table 6−2

6.5 Test Run

6.5.1 Test Run Organization

Since its start in 1970, NCZ has already accumulated enough experience and know-how ; so the test run after the rehabilitation works should be carried out by NCZ's operators. However, the following advisory staff shall be employed in order to smoothly carry out the test run :

1) Coal Handling Operation Adviser
1 man-month

2) Gasification Operation Adviser
1 man-month

3) Ammonia Synthesis-Gas Purification Operation Adviser
1 man-month

4) Nitric Acid and Ammonium Nitrate Operation Adviser.
1 man-month

6.5.2 Contents of Test Run

1) Function test and idle running for rotary machines

2) Dummy operation, conditions of which are similar to actual operations

3) Normal start-up and performance test

6.6 Project Schedule

Fig. 6−4 shows the provisional project schedule of the rehabilitation works :

1) Basic engineering	One month
2) Detailed engineering	Six months
3) Procurement of machinery and materials	Six to nine months
4) Transportation	Two to three months
5) Site works	Six months (Plant shutdown : Five months)

The period of time as detailed above being necessary, mechanical completion shall be attained within 22 months after the contract comes into force and the test run should start in the 23rd month.

6.7 Training

6.7.1 Overseas Training

NCZ's existing technicians/technologists shall undergo the following training course overseas concerning both knowledge and techniques of compressors and welding, aiming at further improving maintenance services after completion of the rehabilitation works ;

1) 10 People × 2 months

2) Basic skill × 0.5 months and in-factory training × 1.5 months, appropriately intermixed with classroom lectures.

6.7.2 On-the-job Training

Technicians mobilized by the contractor shall provide labour with the necessary technical instructions ; and at the same time, taking advantage of this opportunity, NCZ's craftsmen are recommended to learn the practical skills through the rehabilitation works.

6.8 Consulting

An engineering department has already been incorporated into the existing NCZ organization, and consequently on-site consulting seems unnecessary; so, consulting shall be limited only to checking drawings and documents, and witnessed tests of equipment manufactured outside Zambia.

FIG. 6-1

TANZANIA ZAMBIA RAILWAY LINE

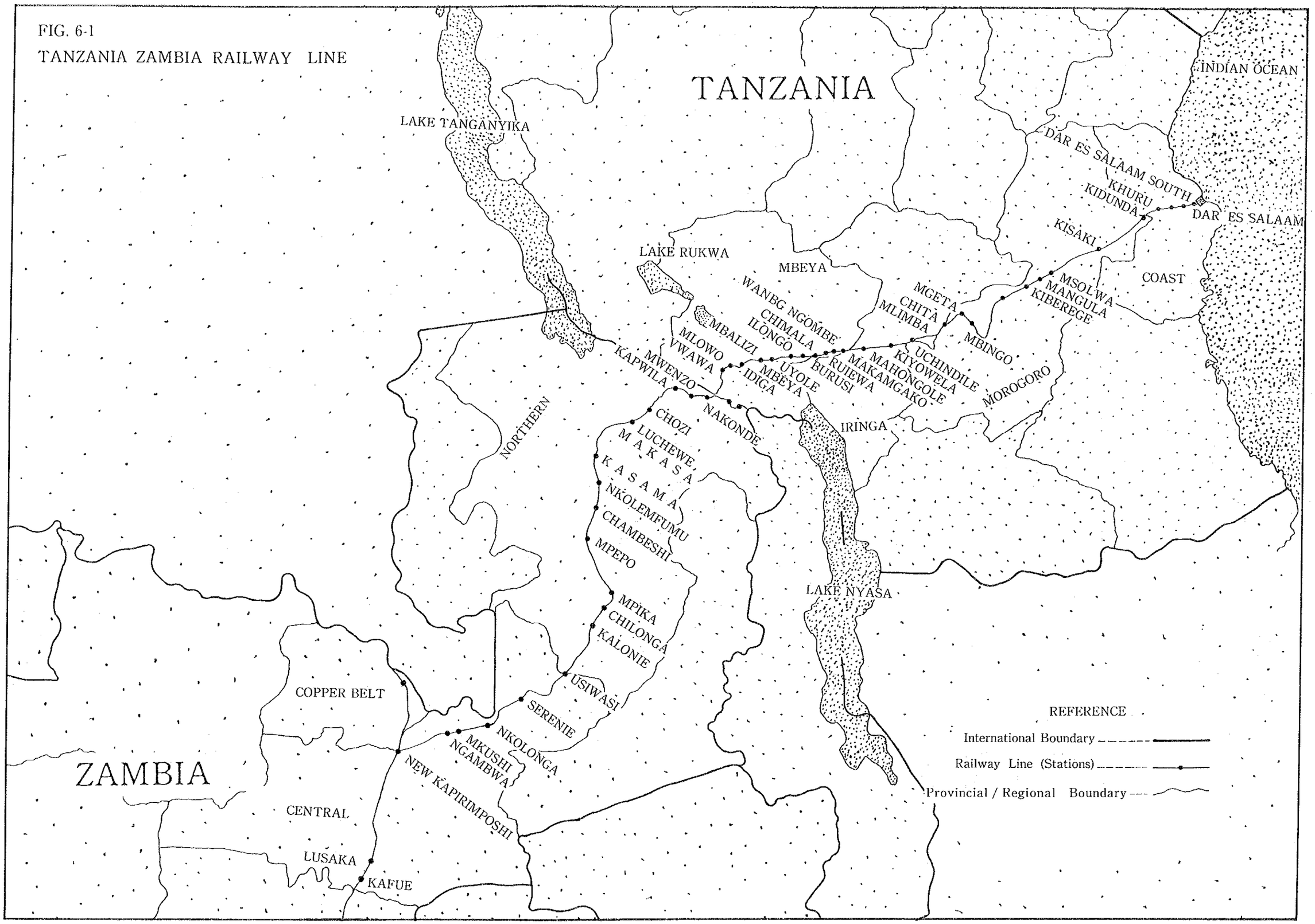

Fig. 6-2 Mobilization Scheme for Contractor's Labour

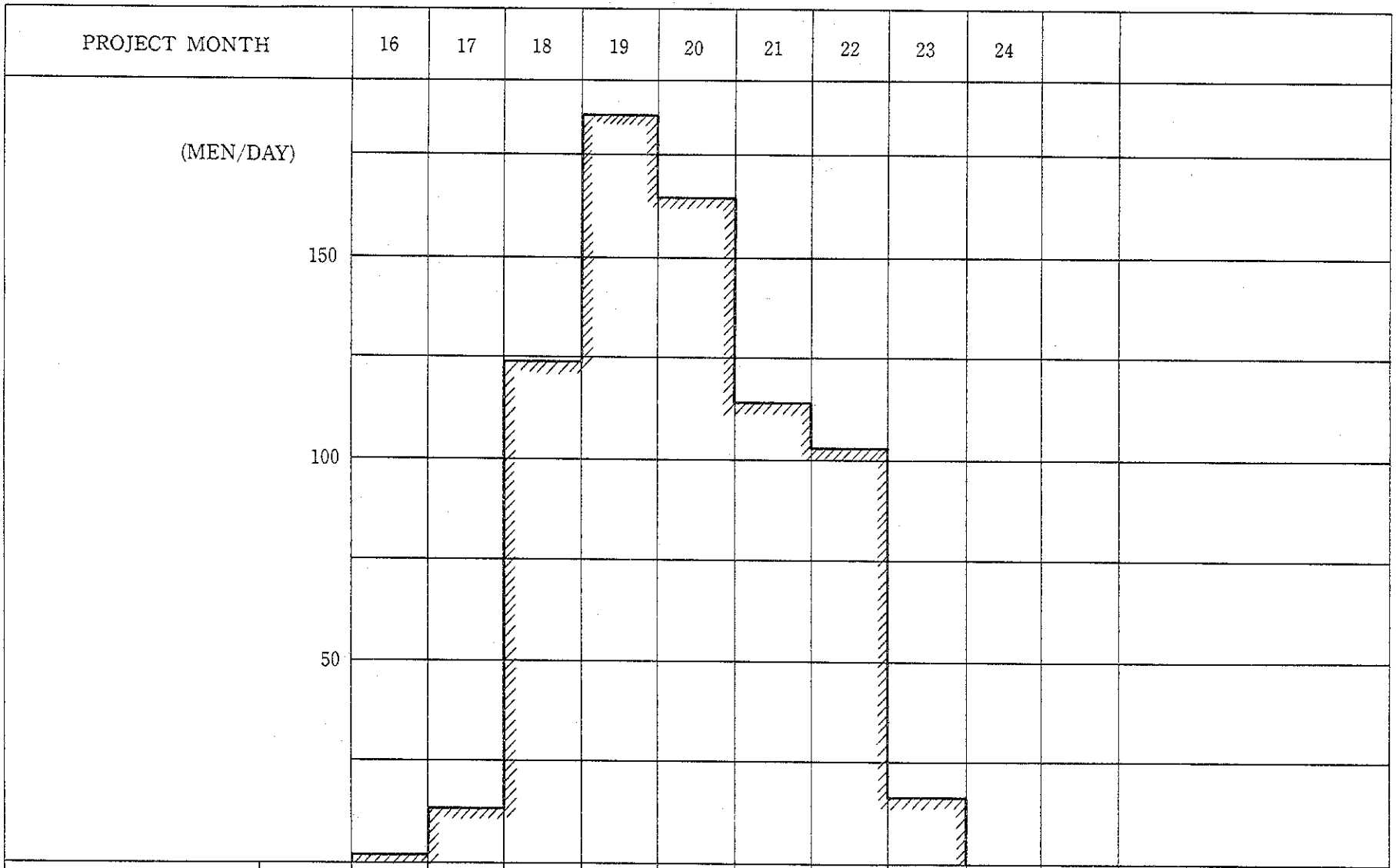

PROJECT MONTH		16	17	18	19	20	21	22	23	24		
DIRECT LABOUR	633		5	111	171	149	98	89	10			
INDIRECT LABOUR	79	1	6	13	14	14	14	13	4			
TOTAL	712	1	11	124	185	163	112	102	14			

FIG. 6-3 MOBILIZATION SCHEME FOR CONTRACTOR'S STAFF / SUPERVISOR / TECHNICIAN

	DESCRIPTION	TOTAL MAN MONTH	DISPATCH SCHEDULE 15	16	17	18	19	20	21	22	23	24	REMARKS
STAFF	SITE MANAGER	8.0											
	ADMINISTRATOR	8.0											
	PROCESS ENGINEER	6.0											
	CONSTRUCTION CONTROLLER	6.0											
	MECHANICAL ENGINEER	5.0											
	PIPING ENGINEER	2.5											
	ELECTRICAL/INSTRU. ENG'NEER	5.5											
	INSPECTOR	4.5											
	OPERATION ADVISOR	1.0											
	- DO. -	1.0											
	- DO. -	1.0											
	- DO.-	1.0											
	SUB - TOTAL	49.5		2	3	5 7	7	7 8	8	8	8		
SUPERVISOR	MILL/ROTARY DRYER S/V	1.5											
	ROTARY COMP. (TURBO.) S/V	2.5											
	ROTARY COMP. (SRM.) S/V	2.5											
	RECIPRO. COMP. S/V	2.5											
	MOTOR S/V	2.5											
	AIR SEP. FACI. S/V	2.0											
	COOLING TOWER S/V	1.0											
	INSTRUMENT PANEL S/V	5.5											
	SUB - TOTAL	20.0				1 2	2 5	5	5 6	3	2 1		
TECHNICIAN	INSPECTION CRAFTSMAN	4.5											
	RIGGER	5.0											
	MILL WRIGHT	7.0											
	- DO. -	3.0											
	INSTRUMENTATION FITTER	5.5											
	- DO. -	4.0											
	- DO. -	4.0											
	- DO. -	4.0											
	BRICKLAYER	4.0											
	EPOXY COATING CRAFTSMAN	4.0											
	WELDER	7.0											
	- DO. -	5.0											
	- DO. -	4.0											
	COOLING TOWER CRAFTSMAN	1.0											
	SUB - TOTAL	62.0			3	6 11	13	13	13	10 7	3		
	TOTAL	131.5		2	6	12 20	22 25	25 26	26 27	21 18	13 12		

FIG. 6-4 PROVISIONAL PROJECT SCHEDULE FOR NCZ REHABILITATION WORKS

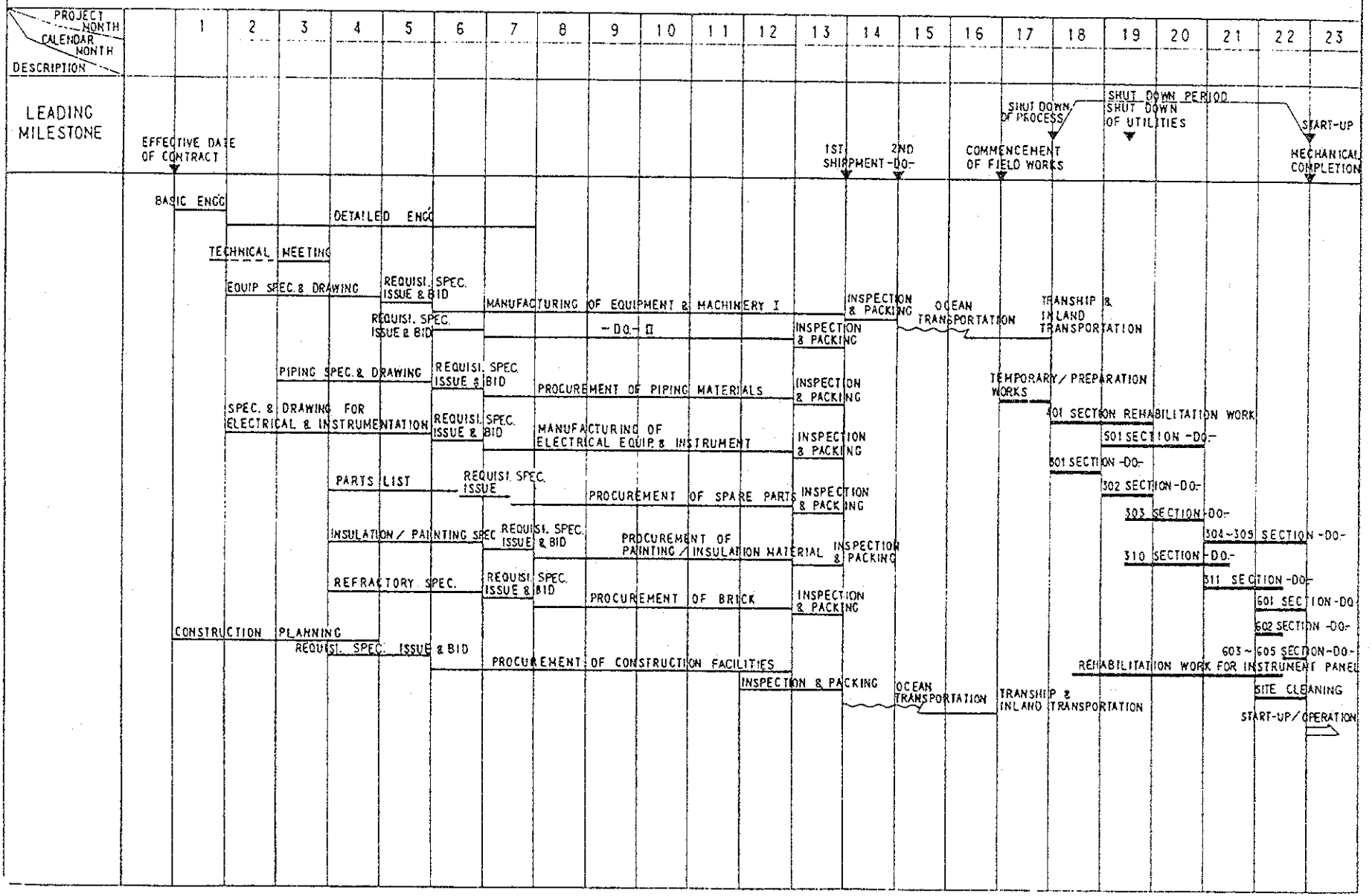

Table 6-1 Construction Facilities

No.	Description	Specification	Q'ty	Remarks
	--Vehicles--			
1.	Truck Crane	60T	1	
2.	do.	20T	1	
3.	do.	15T	1	
4.	Cargo Truck	10T	1	
5.	do.	1T	2	
6.	Forklift Truck	3T	1	
7.	Passenger Car	2000cc 6 Seater	1	
8.	Wagon Car	2000cc 6 Seater	1	
9.	Mini-Bus	2600cc 20 Seater	1	
	-Construction Equipment & Tools-			
1.	Welding Equipment	Arc Welder	8	
		TIG Welder	2	
		Engine Welder	2	
		Welding Rod Dryer	1	
2.	Radiographic Testing		1	
3.	Exhaust Blower	3.7kw	3	
4.	Air Compressor	7.5kw	2	
5.	Centrifugal Pump	1.5kw	1	
6.	Hydraulic Pressure Testing Pump	1.5kw	1	
7.	Hydraulic Jack with Detached Pump	3 Ton	1	
8.	Hydraulic Oil Jack	3 Ton	2	
9.	Chain Block	5 Ton	1	
		3 Ton	2	
		1 Ton	5	
10.	Motor Drive Winch	7.5 kw	1	With Iron Block & Wire
11.	Concrete Mixer	1.5 kw	1	

No.	Description	Specification	Q'ty	Remarks
12.	Concrete Breaker		1	
13.	High Speed Cutting Machine	5.5 kw	2	
14.	Hand Truck	Flat	3	
		For Concrete	3	
15.	Endless Machine & Tools for Conveyor Belt		1 lot	
16.	Turning Roller	Drive Unit 1 Ton	1	
		〃 2.5 Ton	1	
		Driven Unit 1 Ton	1	
		〃 2.5 Ton	1	
17.	Measuring Tools for Compressor Assembly	Dial/Cylinder Gauge Micrometer	1 lot	
18.	Rolling Tower	7.2 m High	2 sets	
19.	Transit		1	
20.	Tilting Level		1	
21.	Ladder	6.0 m	2	
22.	Step Ladder		2	
23.	Scaffolding Materials		1 lot	
24.	Hand Tools		1 lot	
25.	Consumable		1 lot	

Table 6-2 Sub-contractors

	Name	Regular Employees		Capital
		Staff	Worker	
1.	Minestone Zambia Ltd.	20	75	K 1,400,000
2.	Electrical Maintenance Lusaka Ltd.	26	200	
3.	All Metal Eng'g Ltd.	14	55	K 410,000
4.	Behrens Ltd.	13	320	
5.	Drake & Gorham	36	143	K 1,850,000
6.	Lewis Construction Ltd.	40		K 500,000

Chapter 7.

Capital Requirements

Chapter 7. Capital Requirements

7.1. Cost for Rehabilitation

7.1.1 Basis for Calculation

The costs for rehabilitation were calculted in the following manner :

(1) The following exchange rate was used. (average of November, 1980 to Octber, 1981)
K1.00=¥266(=SDR 1.01227)

(2) Machines are supplied from abroad on F.O.B. Basis. Except for basic materials of civil works, the construction materials are imported from abroad.

(3) The cost which is regularly required within the NCZ plants will not be considered to be part of this overall rehabilitation cost. Utility costs as well as cost of care-and-maintenance of machinery and equipment during the rehabilitation period will be included in the regular operating cost of the NCZ.

(4) Exemption from import taxes for machinery, materials and service fee shall be applied.

(5) Scope of rehabilitation works is listed in Chapter 6.

(6) The foreign exchange for the cost of machinery, equipment, materials and supervising fee to be imported has been calculated based upon the yen. (The Japanese currency)

(7) The base project cost has been calculated based upon the present costs (end of 1981).

7.1.2 Capital Requirements

Total cost required for the project was estimated as follows:

Table 7-1 Capital Requirements

(1,000)

Items	Foreign		Local	Total
	¥	K	K	K
Engineering Fee	274,700	1,033		1,033
Machinery & Equipement (FOB)	3,125,300	11,749		11,749
Construction Equipment & Materials	190,300	715	169	884
Ocean Freight & Insurance	196,100	737	48	785
Inland Transport & Handling Charge	150,500	566	48	614
Erection			641	641
Supervising	216,300	813	306	1,119
Training	25,700	97		97
Consultant Fee	70,000	263		263
Base Project Cost	4,248,900	15,973	1,212	17,185
Physical Contingency	339,900	1,278	121	1,399
Price Contingency	792,700	2,980	499	3,479
Total Project Cost	5,381,500	20,231	1,832	22,063
Interest During Construction				
Interest Rate				
Foreign 10%, Local 10%		2,461	92	2,553
Foreign 7%, Local 10%		1,705	92	1,797
Foreign 4%, Local 10%		964	92	1,056

7.2 Methods for Raising Necessary Funds

7.2.1 Foreign Currency

Necessary Investment Funds : ¥5,381,500,000

Long term loans will be applied. The following financing conditions will apply to Chapter 9—Financial Analysis.

(1) Annual Investments Funds

Will be invested according to 7.3-Capital Allocation Plan

1983	¥1,052,600,000
1984	¥4,192,400,000
1985	¥136,500,000

(2) Financing Conditions

Equal amounts of principal will be repaid over 10 years period. Case studies on interest will be made with interest rate of 10%, 7% and 4%.

7.2.2 Domestic Currency

Necessary Investment Funds K1,832,000

Will be financed by commercial banks within Zambia with favorable conditions. Will be repaid equally over a 10 years period at an interest rate of 10%.

7.3 Capital Allocation Plan

The allocation plan of the capital requirements is assumed as follows ;

Table 7-2 Capital Allocation (K 1,000)

	1983	1984	1985	Total
Foreign	3,957	15,761	513	20,231
Local			1,832	1,832
	3,957 (17.9%)	15,761 (71.5%)	2,345 (10.6%)	22,063

According to the above-mentioned plan, interest during construction is calculated as follows. The interest is not included in the capital requirements.

Table 7-3 Interest during Construction (K 1,000)

Interest rate	1983	1984	1985	Total
Foreign 10%, local 10%	198	1,204	1,151	2,553
〃 7%, 〃 10%	138	839	820	1,797
〃 4%, 〃 10%	79	476	501	1,056

7.4 Basis for Estimate of Necessary Investment Funds

The basis for the estimate is as follows :

7.4.1 Transportation and Insurance

(1) Shipping Transportation

Based upon assumption that instruments and construction machines are shipped from Japan.

Weight	4,300 FT (Freight Tons)
Cost	¥41,900/FT
	4,300 × ¥41,900 = ¥180,200,000

(2) Inland Transportation

Weight	4,300 FT
Cost	¥35,000/FT
	4,300 × ¥35,000 = ¥150,500,000

And K 48,000 (which will be brought in Kwacha)

(3) Insurance

Machinery and Equipment (FOB)	¥3,125,300,000
Construction Equipment (FOB)	190,300,000
Shipping Transportation	180,200,000
Inland Transportation	150,500,000
	¥3,646,300,000

For calculation of insurance rates for shipping and inland transportation, a coefficient 0.436 % was used because of the long distance of 2,100 Km for inland transportation.

¥3,646,300,000 × 0.00436 = ¥15,900,000

(4) Erection Insurance

A coefficient 0.35 % was used to calculate the payment of erection insurance to a Zambia insurance company.

¥3,646,300,000 × 0.0035 / 266 = K48,000

7.4.2 Erection

(1) Labour Costs

The following wages include payment to be made to construction firms at the site as well as overhead costs.

Skilled Labour	316man.months × 474 K/man.mon =	K150,000
Unskilled Labour	317man.months × 190 K/man.mon =	K 60,000
Related Labour	79man.months × 305 K/man.mon =	K 24,000
	Total	K234,000

(2) Operating Costs at Site K407,000

This includes running costs, labour costs of office personnel and operating costs of the site office.

7.4.3 Construction Equipment and Materials

(1) Foreign Currency ¥190,300,000

The estimate includes the following :

60 T truck crane 1
20 T truck crane 1
15 T truck crane 1
Other transportation equipment
Tools
Paints
Safety equipment such as fire resistant fence

(2) Local Currency K169,000

The above includes sand, gravel, gasoline and oil.

7.4.4 Supervising

(1) Supervisors' Fee

Basis of estimate is as follows :
Number of supervisors 35 persons
Projected man-months 131.5 man.months

Table 7-4 Supervisor's Fee

	Number	Man. Month	Fee (¥)
Site Manager	1	8	14,600,000
Staff	11	41.5	65,600,000
Supervisor	8	20.0	31,600,000
Technicians	14	62.0	69,400,000
Total	35	131.5	181,200,000

Other domestic fee necessary besides the fee listed above (board and meals) is K306,000

(2) Travel Expenses ¥35,100,000

7.4.5 Training Fee

Calculated on assumption of 10 persons spending 2 months in Japan.

7.4.6 Contingency

(1) Physical Contingency

This contingency is for any increase of capital requirements brought about by the uncertainty of designing and additional order to the machinery and equipment included in the present plan.

It was calculted based upon 8% of total foreign currency and 10% of total local currency or 8.14 % of total currency to the Base Project Cost.

(2) Price Contingency

This is a contingency to cover future inflation. We estimated the annual escalation rate to be 7% for foreign currency and 12% for local currency.
The calculation for each item was made in accordance with the period between the end of 1981 and the time of actual payment. As a result, the contingency will be 18.7% of foreign currency and 41.2% of local currency or 20.2% of the Base Project Cost.

The reason for the high increase in local currency is that we expect annual increase in labour costs of about 20%.

Chapter 8.

Project Execution System

Chapter 8. Project Execution System

8.1 Execution System

The present rehabilitation works are not a grass root project, but to be carried out while operation of the existing plant is shut-down. Since NCZ is provided with an existing manufacturing control system as well as maintenance departments, the works should preferably be executed under NCZ's existing management system.

8.2 Contents of Control

In order to effectively complete the rehabilitation works, various work controls shall be systematized, including schedule control, quality control, cost control, materials control, labour control, safety control, etc.

8.2.1 Schedule Control

In order to complete the rehabilitation works economically and within the fixed work period, studying the periods of execution of various job aspects, and grasping and arranging their progress shall be done in accordance with the works schedule closely studied and established.

8.2.2 Quality Control

Each piece of equipment for the rehabilitation works shall be checked to maintain quality in strict compliance with the relevant specifications.

8.2.3 Cost Control

Costs shall be closely watched and maintained to complete the rehabilitation works within the framework of the execution budget.

8.2.4 Materials Control

Exercising control so as not to cause any hindrance to the works by fully grasping the situation of materials' controls by contractors.

8.2.5 Labour Control

A thorough knowledge of the work performance and labour conditions of the labourers employed by the contractor would help in controlling them so as not to obstruct works.

8.2.6 Safety Control

Safety control aims at completing the rehabilitation works according to the schedule and at the same time making the necessary efforts so that anybody engaged in the work does not suffer any accident.

Moreover, safety control should be designed at grasping running conditions of the new plant which will continue operating even during the period of the present rehabilitation works, and for preventing any explosions, fires and other incidents.

8.3 Control System

8.3.1 NCZ's Control System

To smoothly carry out the present project, the control system as shown in Fig. 8-1 should be set up within NCZ in order to carry out project controls. Since the existing plant will come to a halt during the period of the rehabilitation works, the necessary project staff may possibly be chosen from the existing Engineering and Production Departments.

8.3.2 Contractor's Control System

The contractor's organization shall comprise, as shown in Fig. 8−2, a site manager heading the work control staff (including sub-contractors' staff), supervisors, technicians and local labour.

The work control staff comprising process, mechanical, piping, and electrical instrumentation engineers shall be in charge of work controls in their specific professional fields.

The necessary personnel shall be introduced to occupy the following posts ; an administrator responsible for general affairs including carrying out various negotiations at site ; and a construction controller responsible for engineering matters including comprehensively

coordinating the works, controlling local sub-contractors, cost, etc. Furthermore, supervisors and technicians shall be expected to supervise and control local labour.

FIG. 8-1 ORGANIZATION STRUCTURE FOR NCZ

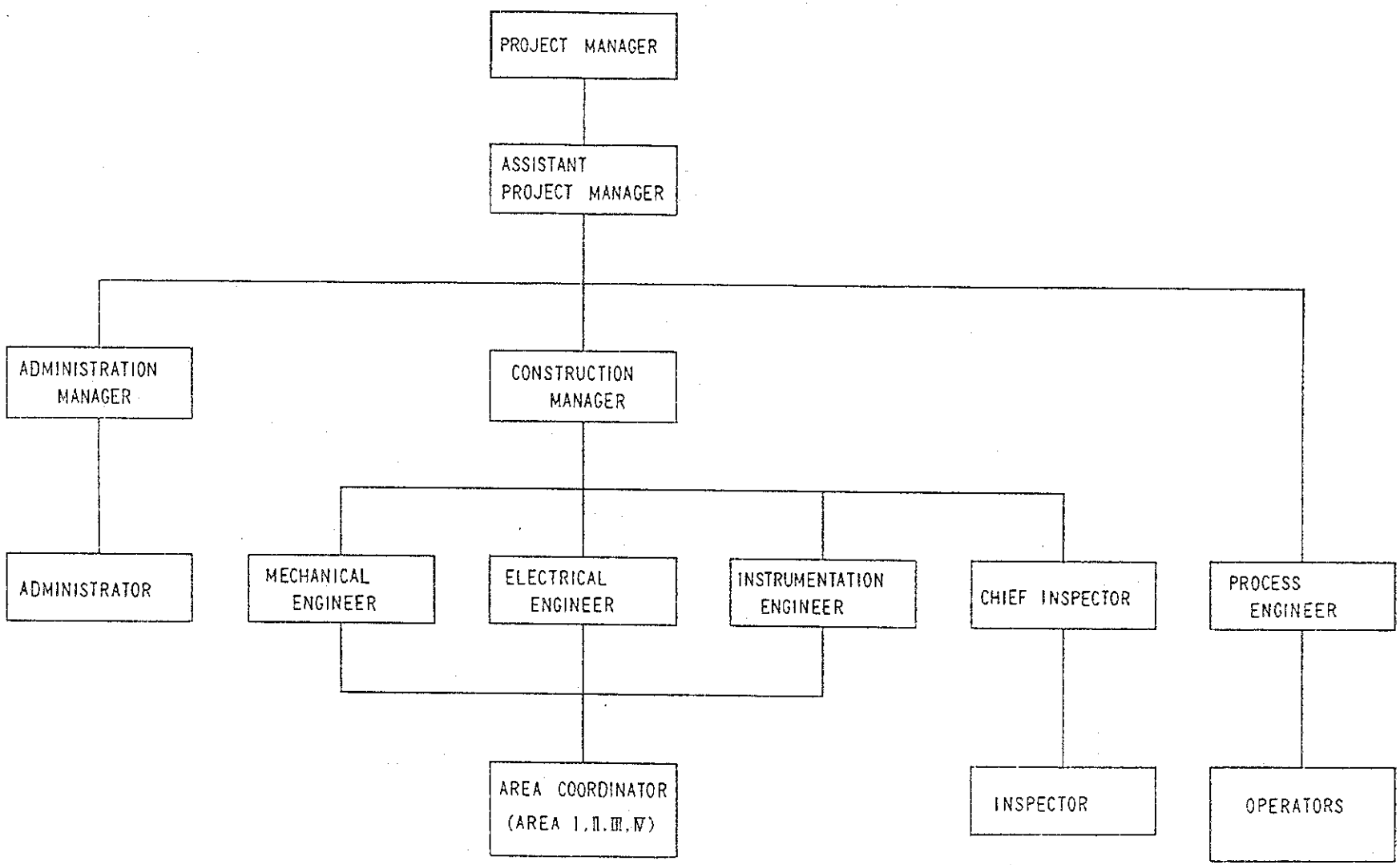

FIG. 8-2 SITE ORGANIZATION STRUCTURE FOR CONTRACTOR

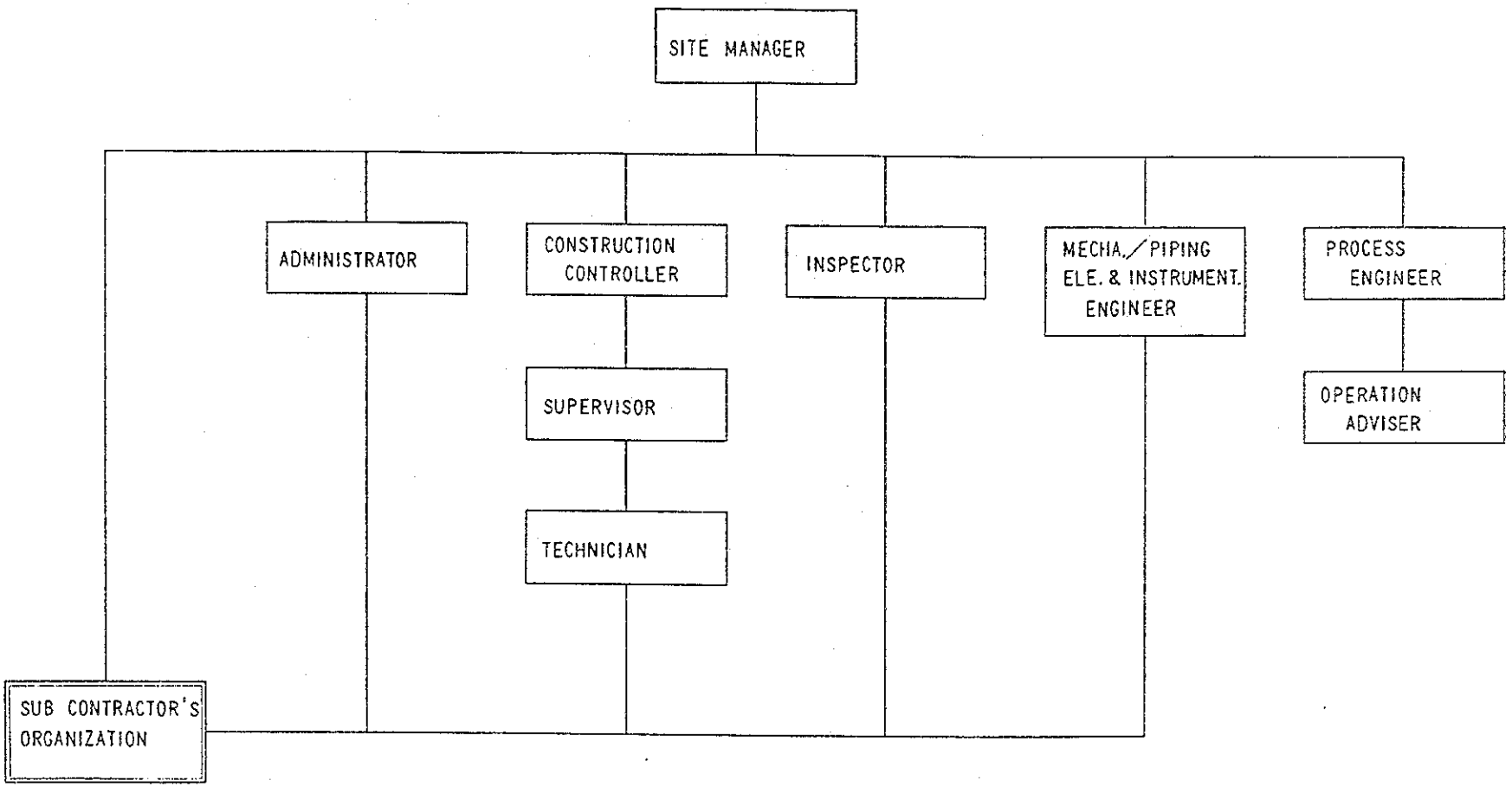

Chapter 9.

Financial Analysis

Chapter 9. Financial Analysis

9.1 Basic Concept for Financial Appraisal

When appraising the effectiveness of the investment for the rehabilitation works, the effects of the investment already made and new investment for the rehabilitation overlap or offset and it is difficult to judge the effectiveness of the new investment alone.

Furthermore, since in the case of NCZ the exapansion plant will start operation in 1982 separately from the rehabilitation works for the existing plant, financial appraisals on not only the existing plant alone but also whole NCZ including the expansion plant are necessary. Thus, financial analysis and appraisal are made in the following manner.

(1) Profit and loss of the existing plant without rehabilitation is examined.

(2) Profit and loss of the existing plant with rehabilitation is examined comparing with the case without rehabilitation.

(3) In order to clarify the effectiveness of rehabilitaion, internal rate of return (IRR) of the investment for rehabilitation is computed assuming the difference in profitability between the cases with and without rehabilitation of the existing plant to be return resulting from the investment for rehabilitation. The costs for the rehabilitation works are considered to be the investment cost.

(4) In order to understand the financial position of NCZ, profit and loss of whole NCZ as a combination of the existing plant and the expansion plant is examined.

The financial analysis is based on the figures and data (App. 5) provided by NCZ. The period for the analysis is from 1982 when the expansion plant starts operation, and the accouting period is based on the fiscal year (April – March) of NCZ. Prices adopted in the analysis are at the constant level of 1982. Accordingly, the costs for rehabilitation excluding price contingency, which are at the 1982 price level, are adopted in the financial analysis.

9.2 Sales and Production Plan

9.2.1 Sales Plan

The sales plan was made based upon the projected sales plan provided by NCZ for the start of the expansion plant in 1982. The plan is shown in Table 9−1 (2).

(1) The Table 9−1 (2) assumes that the exiting plant goes through rehabilitation in 1985.

(2) The plan is based upon the assumption that ammonium nitrate produced by the existing plant will be for direct sales.

(3) As far as compound fertilizers are concerned, in order to maintain a proper level of stock, one month's production of fertilizer will be kept in stock in 1982 and 1983 so as to have a constant stock of 2 months' production from 1984.

9.2.2 Projected Sales Plan of the Existing Plant without Rehabilitation

Fisical Year	Project Sales
1982	20,520 T/Y
1983	18,720
1984	18,720
1985	17,280
1986	17,280
1987 and on	15,120

9.2.3 Production Plan

General Production plans for the expansion plant and the existing plant combined are shown in Table 9−1 (1).

(1) The production of the existing plant will decrease annually until it is rehabilitated in 1985.

(2) At the existing plant,all the ammonia will be used for producing nitric acid and then ammonium nitrate.

Table 9-1 (1) Production Plan (T/Y)

	Ammonia			Nitric Acid			AN			AS	CF				
	Exist	Expan.	Total	Exist	Expan	total	Exist.	Expan.	Total	Total	C	R	D	X	Total
1982	20,520	35,063	55,583	35,011	48,067	83,078	41,680	52,009	93,689	33,427	6,683	29,272	18,442	30,203	84,600
1983	18,720	40,832	59,552	31,940	55,572	87,512	38,020	61,051	99,071	38,998	7,797	34,150	21,517	35,237	98,700
1984	18,720	48,747	67,467	31,940	65,532	97,472	38,020	73,051	111,071	47,354	9,468	41,468	26,127	42,787	119,850
1985	12,000	53,791	65,791	25,000	70,000	95,000	30,000	80,000	110,000	47,354	9,468	41,468	26,127	42,787	119,850
1986	24,000	50,629	74,629	50,000	61,200	111,200	60,000	68,000	128,000	47,354	9,468	41,468	26,127	42,787	119,850
1987	24,000	50,629	74,629	50,000	61,200	111,200	60,000	68,000	128,000	47,354	9,468	41,468	26,127	42,787	119,850
1988	24,000	50,629	74,629	50,000	61,200	111,200	60,000	68,000	128,000	47,354	9,468	41,468	26,127	42,787	119,850

Table 9-1 (2) Sales Plan (T/Y)

1982			90			4,900			78,320	0	5,894	25,816	16,265	26,637	74,612
1983			90			4,900			81,140	0	7,008	30,694	19,340	31,671	88,713
1984			90			4,900			89,298	0	9,468	41,468	26,127	42,787	119,850
1985			90			3,700			88,227	0	9,468	41,468	26,127	42,787	119,850
1986			90			3,700			106,227	0	9,468	41,468	26,127	42,787	119,850
1987			90			3,700			106,227	0	9,468	41,468	26,127	42,787	119,850
1988			90			3,700			106,227	0	9,468	41,468	26,127	42,787	119,850

(3) It is assumed that the existing plant will operate at full capacity after undergoing rehabilitation.

(4) In accordance with the NCZ plan, it is assumed that the expansion plant will operate at 60 percent of its production capacity in 1982, at 70 percent in 1983 and at 85 percent there after for the production of the final product compound fertilizers, and ammonium nitrate. Its ammonia, nitric acid and ammonium sulphate sections will operate at operational rates just enough to supply raw materials to the final product sections and to meet ammonia and nitric acid sales demands.

(5) After the existing plant undergoes rehabilitation in 1985, the expansion plant will increase its production of ammonia synthesizing raw gas (24,000 T/Y as ammonia) and ammonia (4,300 T/Y) for supplying to the existing plant.

9.2.4 Production Plan of the Existing Plant without Rehabilitation

The production plan for the existing plant without rehabilitation is shown in Table 9-2.

Table 9-2 Production Plan of Existing Plant

	Ammonia (T/Y)		Nitric Acid (T/Y)		Ammonium Nitrate (T/Y)	
	Not Rehab.	Rehab.	Not Rehab.	Rehab.	Not Rehab.	Rehab.
1982	20,520		35,011		41,680	
1983	18,720		31,940		38,024	
1984	18,720		31,940		38,024	
1985	17,280	12,000	29,480	25,000	35,099	30,000
1986	17,280	24,000	29,483	50,000	35,099	60,000
1987 and onwards	15,120	24,000	25,798	50,000	30,711	60,000

(1) It is assumed that all the ammonia will be used for producing nitric acid and then ammonium nitrate.

(2) Production volumes are estimated on the basis of the NCZ plan for 1982 (number of days in operation : 285 days per year, ammonia production : 72 tons per day). Further, the annual number of days in operation is assumed as follows as a result of check/inspection of existing plant.

Year	Annual No.of Days in Operation
1982	285
1983	260
1984	260
1985	240
1986	240
1987 onwards	210

9.3 Production Cost Factor

9.3.1 Production Cost Factor of the Existing Plant

As shown in Table 9−3.

9.3.2 Production Cost Factor of the Expansion Plant

As shown in Table 9−4 (1) and (2).

9.4 Payment, Interest Rate, and Depreciation

9.4.1 Existing Plant as of the end of 1981

	(K 1,000)	
Investment (machinery)	6,180	Book value as of the end of 1981
Working Capital	6,700	
Loans	10,000	Interest rate 8.5% payable over 13 years
Equity Capital	12,880	
Internal Reaserve	(−)10,000	

9.4.2 Expansion Plant

	(K 1,000)	
Investment (machinery)	274,400	
(building)	20,000	
Working Capital	4,502	
Loans	180,702	Interest rate 10% payable over 13 years
Equity Capital	118,200	

9.4.3 Investment Cost of Rehabilitation of the Existing Plant

(K 1,000)

Investment	18,584	
Interest during Construction	2,165	
Loans	20,749	Interest rate 4,7,10 % payable over 10 years

9.4.4 Depreciation (Straight Line Method)

Machinery	7.5 percent
Building	2.0 percent

The remaining book value of the existing plant is regarded as the facility cost and is to be depreciated at an annual fixed rate of 7.5% after 1982.

9.5 Other Factors

9.5.1 Working Capital

Existing Plant	Equivalent to 2 months' cost for ammonium nitrate (60,000T/Y) and is included in K6,700,000(Ref. 9.4.1)
Expansion Plant	Equivalent to 2 months'cost for compound fertilizers at the 1984 production level.
Interest Rate	10 percent

9.5.2 Tax

Only income tax is imposed. The expansion plant is exempted from taxation for five years ater the operation start and losses are carried over for five years.

9.6 Sales Price

NCZ is the only fertilizer manufacturer in Zambia and all its products are marketed by NAM Board. Pricing has been done in accordance with the policy of Zambian Government. Thus a new pricing formula is now under study at government agencies concerned.

New prices will be determined on the basis of production costs at NCZ. Thus the study team calculated the combined production costs for both the existing and the expansion plants. Financial analysis was made on an assumption that products are priced at these cost levels and then studies were made on price levels that will ensure healthy management.

9.6.1 Sales Prices of Products

Ammonia	751 K/T
Nitric Acid	295
Ammonium Nitrate	507
Ammonium Sulphate	471
Compound Fertilizer C	519
Compound Fertilizer D	531
Compound Fertilizer R	557
Compound Fertilizer X	565

9.6.2 Conditions for Estimating Production Costs

(1) Production Volume

Existing Plant : 1982 level

Expansion Plant :

85 percent of designed production capacities for compound fertilizer products and ammonium nitrate. Ammonia, nitric acid and ammonium sulphate production volumes are set at levels just enough to supply raw materials for the above production.

Table 9-5 Production Volume

Product	Existing Plant T/Y	Expansion Plant T/Y	Total T/Y
Ammonia	20,520	45,746	66,266
Nitric Acid	35,011	59,500	94,511
Ammonium Nitrate	41,680	68,000	109,680
Ammonium sulphate		47,354	47,354
Compound Fertilizer -C		9,468	9,468
〃 -D		26,127	26,127
〃 -R		41,468	41,468
〃 -X		42,787	42,787

Note : The calculation base for the above production is as per attached Table 9−6 and Fig. 9−1.

(2) Variable Cost, Fixed Cost

Existing Plant : Figures before rehabilitation works (1982)

Expansion Plant : Figures for 1984

Fixed costs for the existing plant are distributed as follows in accordance with NCZ data.

Table 9-7 Distribution of Fixed Costs

	Ammonia	Nitric Acid	Ammonium Nitrate
Labor Cost	0.72	0.102	0.178
Maintenance Cost	0.54	0.23	0.23
Administration Cost	0.65	0.15	0.20
Sales Expense		0.2	0.8
Depreciation	0.54	0.23	0.23
Interest	0.602	0.186	0.212

Fixed costs of the expansion plant (including depreciation and interest) are distributed as follows :

Ammonia	60 (%)
Nitric Acid	10
Ammonium Nitrate	10
Ammonium Sulphate	5
Compound Fertilizer	15

9.7 Project Life

Financial analysis is made for the period of 13 years from 1982 through 1994. Accordingly, 13 years for the expansion plant, and 9.5 years for the existing plant after the completion of rehabilitation works.

9.8 Financial Analysis

9.8.1 Profitability Improvement Expected as a Result of Rehabilitation Works.

As a result of renovation of old facilities through rehabilitation works, unit consumption will be improved as follows as a result of decreased suspension of operation and efficiency improvements.

Table 9-8 Efficiency Improvements

	Not Rehabilitated		Rehabilitated
Operation rate	1982	after 1987	
	86%	64%	100%
Ammonia Production	72T/D		80T/D
Unit Consumption			
Coal/Ammonia	2.95		2.71
Ammonia/Nitric Acid	0.298		0.290
Ammonia/Ammonium Nitrate	0.242		0.230
Nitric Acid/Ammonium Nitrate	0.840		0.830

As shown in attached Table 9.8-2, if the existing plant does not undergo rehabilitation, the profit and loss account of NCZ will be in deficit annually in and after 1985. However, if it undergoes rehabilitation, NCZ will make net profit in and after 1986 as a result of profitability improvements brought about by the rehabilitation works.

Profit and loss positions after tax for 10 years after the completion of rehabilitation works are shown in the following table.

Table 9−9 Profit and Loss Positions after Tax for Ten Years (K 1 , 0 0 0)

Year	1985	1986	1987	1988	1989
Profit and Loss (Not rehabilitated)	(−)647	(−)582	(−)2,789	(−)2,893	(−)3,147
Profit and Loss (Rehabilitated)	(−)4,436	1,870	2,252	2,592	2,354

Year	1990	1991	1992	1993	1994
Profit and Loss (Not rehabilitated)	(−)3,425	(−)3,732	(−)4,069	(−)4,440	(−)4,848
Porfit and Loss (Rehabilitated)	1,569	1,705	1,842	1,978	2,115

Incidentally, NCZ is in deficit in 1985 because the operation will be suspended temporarily for rehabilitation works.

Income statement without rehabilitation works and that after rehabilitation works as well as funds flow statement, balance sheet and cost details are shown in the attached Tables 9·8−2 through −6.

9.8.2 Investment Effect of Rehabilitation Works

If profit on the rehabilitation investment is regarded to be the difference between profit without rehabilitation and that after rehabilitation (profitability improvement), the internal rate of return is estimated 26.03 percent before tax. Thus the investment is considered worth making.

To look at the financial position of the whole existing plant after rehabilitation works, since the cumulative losses so far are estimated to reach K 10 million in light of the present levels of outstanding loans, the cumulative profits for 1994, 10 years after the completion of rehabilitation works, will be limited to K5,600,000. There is also no basic problems involved in repaying principal and interest on loans payable.

This is partly because it is assumed that the loans are payable over 10 years. The average debt-service ratio is at a low level of 1.3 on an average from 1986 to 1994. Further the cash balance as of the end of 1994 is estimated at K11,671,000. However, considering that the cumulative depreciation for the 1982−1994 period is K21,337,000, actual reserves in cash are considered to be rather small.

Assuming the total of equity capital and outstanding loans in 1982 and the investment for rehabilitation to be the overall investment costs for the existing plant, the internal rate of return is computed.

IRR (before tax) : 7.41%
IRR (after tax) : 5.87%

Please refer to Table 9.8−7 for details.

As shown in the above the investment effectiveness is not considered to be satisfactorily sufficient due to the cumulative deficit assumed in this study.

9.8.3 Financial Outlook for the Whole of NCZ

The profit and loss outlook was projected for the existing plant after rehabilitation and the expansion plant as a whole. The results are shown in Table 9−11. As shown in the table, the company as a whole will record a surplus in 1984 and cumulative deficits will be eliminated in 1985.

As shown in Table 9−11 , cumulative profits as of the end of 1994 are estimated at K112 million. Further the cash balance (actual internal reserves) as of the end of 1994 is estimated at K 223 million. However, considering about K 313 million invested for the rehabilitation and expansion plant, actual internal reserves are considered rather small.

The income statement, funds flow statement, balance sheet, and cost details are in Tables 9 • 8−8 through 9 • 8−11.

Table 9-10 Investment Effect

(K 1,000)

	Investment	Return Before Tax	Discount Coefficient (Discount Rate=26.03%)	Present Value	
				Investment	Return
1983	3,373	-	1.0000	3,373	-
1984	13,440	-	0.7936	10,665	-
1985	1,771	(-)2,740	0.6297	1,115	(-)1,725
1986	-	5,715	0.4997	-	2,856
1987	-	8,154	0.3966	-	3,233
1988	-	8,468	0.3147	-	2,665
1989	-	8,468	0.2497	-	2,115
1990	-	8,468	0.1982	-	1,678
1991	-	8,468	0.1573	-	1,332
1992	-	8,468	0.1248	-	1,057
1993	-	8,468	0.0990	-	839
1994	(-)5,586	8,468	0.0786	(-)439	666
Total:	12,998	70,405		14,715	14,715

Note: Return before tax = Profit before tax + Depreciation + Interest

Table 9-11 Cumulative Profit

(K 1,000)

	1982	1983	1984	1985	1986	1987	1988	1989	1990	1991	1992	1993	1994
Sales	83,132	92,333	112,847	111,950	121,430	121,430	121,430	121,430	121,430	121,430	121,430	121,430	121,430
Net profit after tex	(-)7,948	(-)2,579	9,780	11,428	16,424	9,026	9,840	10,654	11,469	12,283	13,097	13,911	14,725
Cumulative Profit and Loss	(-)17,948	(-)20,527	(-)10,747	681	17,105	26,131	35,972	46,626	58,095	70,377	83,474	97,385	112,110

9.8.4 Sensitivity Analysis

Changes of sales price have the greatest influence on the profitability. Thus the efffect of such changes was analyzed.

(1) Investment Effect of Rehabilitation Works

Table 9-12 Sensitivity Analysis-Investment Effect

	Interanl Rate of Return in terms of Profit before Tax	Internal Rate of Return in terms of Profit after Tax
Base Case	26.02%	19.17%
Sales Price 5% up	28.12%	20.51%
Sales Price 10%up	30.22%	21.86%
Sales Price 15% up	32.15%	23.12%

(2) Profitability of Existing Plant after Rehabilitation

Table 9-13 Sensitivity Analysis-Profitability(1)

(K 1,000)

	Cumulative Profit and Loss as of End of 1994	Cash Balance as of End of 1994
Base Case	7,926	11,671
Sales Price 5% up	17,541	22,036
Sales Price 10% up	26,481	31,757
Sales Price 15% up	35,077	41,103
Loan Interest 7% p. a.	10,735	14,697
Loan Interest 4% p. a.	12,889	17,064

Note : Sales prices of 7% p. a. and 4% p. a. of loan interest are same as base case.

(3) Combined Profitability of Existing Plant after Rehabilitation and Expansion Plant

Table 9-14 Sensitivity Analysis-Profitability(2)

(K 1,000)

	Cumulative Profit and Loss as of End of 1994	Cash Balance as of End of 1994
Base Case	112,110	223,280
Sales Price 5% up	162,252	276,444
Sales Price 10% up	213,404	330,679
Sales Price 15% up	263,156	383,430

Sales prices adopted in this study will ensure the minimum profitability for NCZ and enable it to repay principals and interests on loans. However, considering depreciation for initial equipment investments, the cash balance equivalent to actual internal reserves before dividend payment of at least K 313 million is considered necessary in 1994 when repayments for loans payable will be almost completed.

To ensure such healthy conditions for NCZ, it is considered necessary to have sales price increases of 5 to 10 percent as analyzed in the sensitivity analysis while giving due consideration to the effect on the national economy of such increases.

The financial statements for each case are shown in Tables 9.8−12 through 9.8 −38.

Table 9-3 Cost Factors of Existing Plant

	Up to Rehabilitation	After Rehabilitation
1. Unit Consumption		
Coal to Ammonia	2.95	2.71
Ammonia to Nitric Acid	0.298	0.290
Ammonia to Ammonium Nitrate	0.242	0.230
Nitric Acid to Ammonium Nitrate	0.84	0.830
2. Variable Cost		
Coal	52 K/Y	
Raw Gas		287.74 K/T
Ammonia		722.52 K/T
Fuel	1,492,260 K/Y	795,872 K/Y
Chemicals	31.29 K/T Ammonia	31.29 K/T Ammonia
	0.23 K/T Nitric Acid	0.23 K/T Nitric Acid
	1.28 K/T Ammonium Nitrate	1.28 K/T Ammonium Nitrate
Catalysts	135,000 K/Y	135,000 K/Y
Utility	1,305,494 K/Y	1,305,494 K/Y
Bag	17 K/T Ammonium Nitrate	17 K/T Ammonium Nitrate
3. Fixed Cost		
Salary & Benefits	4,361,000 K/Y	4,361,000 K/Y
Maintenance	See "Note"	See "Note"
Overhead	2,565,000 K/Y	2,565,000 K/Y
4. Sales Expense	1,253,000 K/Y	1,253,000 K/Y

Note (1) Since raw gas and ammonia are to be supplied from the expansion plant, estimates are made on the basis of the expansion plant's production costs. (Refer to Table 9 −4.)

(2) Fuel

Until rehabilitation works

$476K/m^3 \times 38m^3/D \times 7.5D/M \times 11M/Y$

After rehabilitation works

$476K/m^3 \times 38m^3/D \times 4D/M \times 11M/Y$

(3) Utility (Electricity)

Basic Rate (common with the expansion plant in proportion to consumption)
53,700 KVA × 2.20K/M + 3,200K/M
Consumption rate
8,450,000KWH/M × 0.0065K/KWH

(4) Unit Consumption

When the existing plant does not undergo rehabilitation, the unit consumption will be at the same level as in the past but if the existing plant undergoes rehabilitation, operational suspensions are expected to decrease as well as an improvement of unit consumption as a result of the increased efficiency of the facilities.

(5) Maintenance Costs

Not Rehabilitated

	Operation Suspension	Preventive Maintenance	Repair	Total
1982	45 D/Y	787,500	787,500	1,575,000
1983	70	787,500	1,228,500	2,016,000
1984	70	787,500	1,228,500	2,016,000
1985	90	787,500	1,575,000	2,362,500
1986	90	787,500	1,575,000	2,362,500
1987	120	787,500	2,102,625	2,890,125

Fixed level after 1987

Rehabilitated

1985	787,500	(6 months operation)
1986	1,575,000 Fixed level after 1986	

Table 9-4 (1) Cost Factors of Expansion Plant (Unit Consumption)

	Ammonia	Nitric Acid	Ammon. Nitrate	Ammon. Sulphate	Compound				
					C	V	D	R	X
Raw Materials									
Coal	2.71	-	-	-	-	-	-	-	-
Ammonia	-	0.29	0.23	0.27	0.007	0.007	-	-	
Nitric Acid %	-	-	0.83	-	-	-	-	-	-
Ammonium Nitrate	-	-	-	-	0.093	0.061	0.154	0.122	0.276
Sulphuric Acid	-	-	-	0.786	0.004	-	0.032	-	0.004
Ammonium Sulphate	-	-	-	-	0.134	0.080	0.241	0.489	0.456
Di-Ammonium Phosphate	-	-	-	-	-	-	0.027	0.444	0.155
Triple Super Phosphate	-	-	-	-	0.289	0.273	0.421	-	0.067
Normal Super Phosphate	-	-	-	-	0.312	0.365	-	-	-
Potassium Sulphate	-	-	-	-	0.188	0.234	0.208	-	0.104
Potassium Chloride	-	-	-	-	0.053	0.066	-	-	-
Borax	-	-	-	-	0.010	0.010	-	-	-
Coating Agent	-	-	-	-	0.007	0.011	-	0.011	0.007
Bags	-	-	-	-	-	-	-	-	-

Table 9-4(2) Cost Factors of Expansion Plant

1. Unit Price of Raw Materials		
Coal	52	K/T
Sulphuric Acid *	280	〃 (Up to Jun. 1983)
	203	〃 (After Jul. 1983)
Di-ammonium Phosphate	420	〃
Triple Super Phosphate	380	〃
Normal Super Phosphate	370	〃
Potassium Chloride	350	〃
Potassium Sulphate	410	〃
Borax	520	〃
Coating Agent	300	〃
Nuflo 10	600	〃
2. Variable Cost (85% capacity utilization)		
Chemicals	2,085,600	K/Y
Catalysts	1,038,000	K/Y
Utility	2,296,661	K/Y
Bag	17	K/T Fertilizers
3. Fixed Cost		
Salary & Benefits	3,908,000	K/Y
Maintenance	2,000,000	K/Y
Overhead	700,000	K/Y
4. Sales Expense	206,000	K/Y

* Sulphuric Acid Plant will start operation in July, 1983.

Fig. 9-1 Basis of Production Cost Calculation (T/Y)

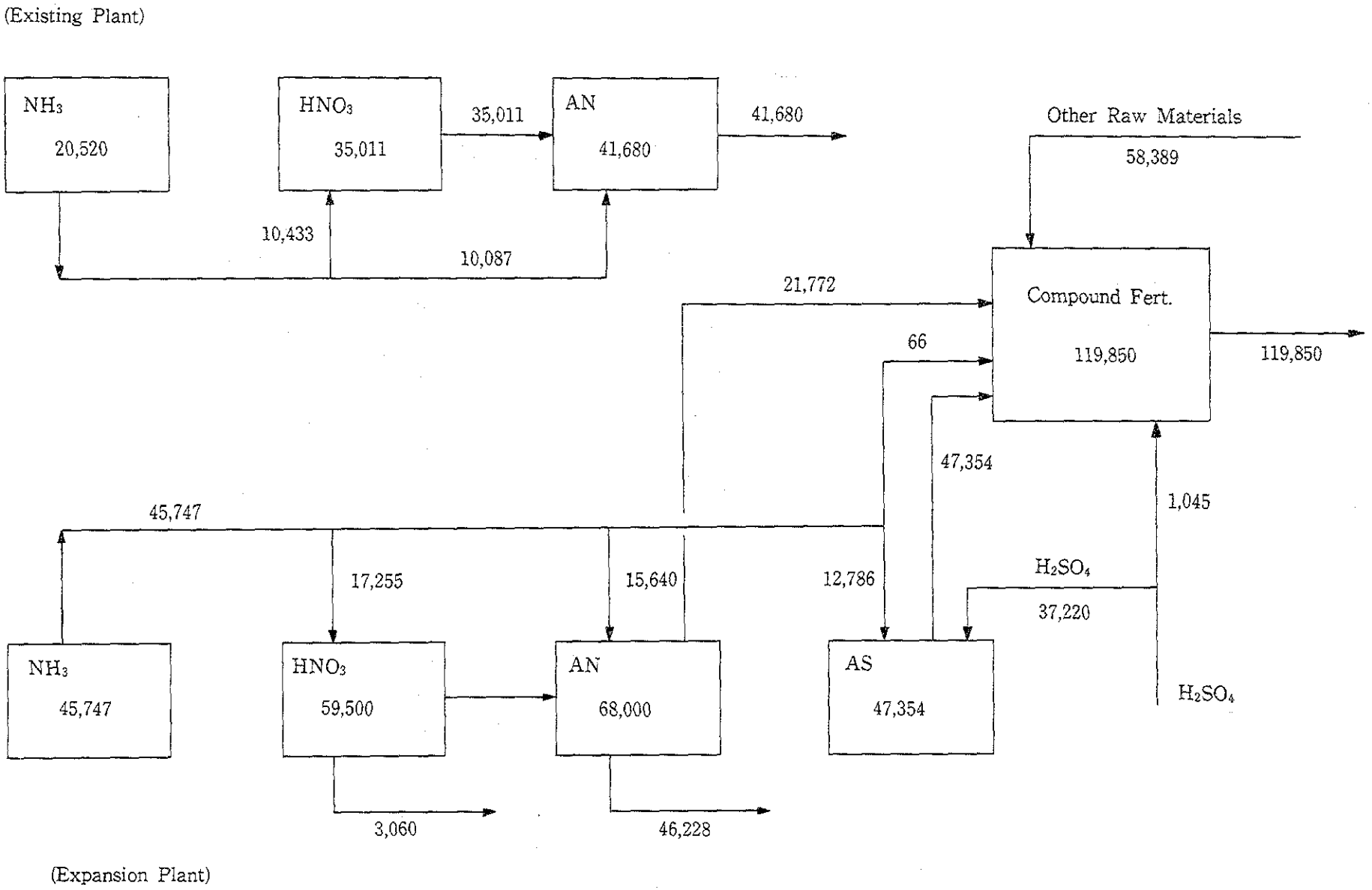

Table 9—6 Raw Materials of Compound Fertilizers

Items	C	R	D	X	Total
Production T/Y	9,468	41,468	26,127	42,787	119,850
NH_3	66	—	—	—	66
AN	881	5,059	4,024	11,809	21,773
H_2SO_4	38	—	836	171	1,045
AS	1,269	20,278	6,297	19,511	47,355
DAP	—	18,412	705	6,632	25,749
TSP	2,736	—	11,000	2,867	16,603
NSP	2,954	—	—	—	2,954
PS	1,780	—	5,434	4,450	11,664
PC	502	—	—	—	502
Borax	95	—	—	—	95
Coating	66	456	—	300	822

List of Tables

List of Table (Cont'd)

Table 9.8-1 *** ZAMBIA REHABILITATION PROJECT ***
IRR CALCULATION OF TOTAL INVESTMENT
- INVESTMENT EFFECT OF REHABILITATION - (K'000)

YEAR	TOTAL INVESTMENT	PROFIT BEFORE TAX	DEPRECIATION	INTEREST ON L-T DEBT	RETURN BEFORE TAX	DISCOUNT FACTOR	(BEFORE TAX) PRESENT VALUE INVEST.	(BEFORE TAX) PRESENT VALUE RETURN	(LESS) INCOME TAX	RETURN AFTER TAX	DISCOUNT FACTOR	(AFTER TAX) PRESENT VALUE INVEST.	(AFTER TAX) PRESENT VALUE RETURN
1983	3373.	0.	0.	0.	0.	1.0000	3373.	0.	0.	0.	1.0000	3373.	0.
1984	13449.	0.	0.	0.	0.	0.7936	10665.	0.	0.	0.	0.8391	11278.	0.
1985	1771.	-4579.	798.	1037.	-2740.	0.6297	1115.	-1725.	0.	-2740.	0.7041	1247.	-1929.
1986	0.	2147.	1596.	1971.	5715.	0.4997	0.	2856.	0.	5715.	0.5708	0.	3326.
1987	0.	4794.	1596.	1764.	8154.	0.3966	0.	3233.	1183.	6971.	0.4958	0.	3456.
1988	0.	5316.	1596.	1556.	8468.	0.3147	0.	2665.	2658.	5810.	0.4160	0.	2417.
1989	0.	5521.	1596.	1349.	8468.	0.2497	0.	2115.	2762.	5707.	0.3491	0.	1992.
1990	0.	5731.	1596.	1141.	8468.	0.1982	0.	1678.	2866.	5603.	0.2929	0.	1641.
1991	0.	5939.	1596.	934.	8468.	0.1573	0.	1332.	2969.	5499.	0.2458	0.	1352.
1992	0.	6146.	1596.	726.	8468.	0.1248	0.	1057.	3073.	5395.	0.2062	0.	1113.
1993	0.	6354.	1596.	519.	8468.	0.0990	0.	839.	3177.	5292.	0.1730	0.	916.
1994	-5586.	6561.	1596.	311.	8468.	0.0786	-439.	666.	3281.	5188.	0.1452	-811.	753.
TOTAL	12998.				70408.		14715.	14715.		48439.		15086.	15086.

***** INTERNAL RATE OF RETURN ***** 26.02 PER CENT (BEFORE TAX) 19.17 PER CENT (AFTER TAX)

***** PAY-OUT PERIOD ***** 4.14 YEAR (BEFORE TAX) 4.87 YEAR (AFTER TAX)
(THE YEAR WHEN THE TOTAL CAPITAL COST WILL BE PAID OUT BY ACCUMULATED TOTAL RETURN, FROM THE BEG. OF OPERATION)

CAPITAL REQUIREMENTS	
LAND AND SITE IMPROVEMENT	0.
CONSTRUCTED FACILITIES	18584.
PRE-INVEST AND START-UP EXP	0.
INTEREST DURING CONSTRUCTION	2165.
TOTAL FIXED CAPITAL	20749.
INITIAL WORKING CAPITAL	0.
TOTAL CAPITAL COST	20749.

SOURCE OF FUNDS	
PAID-UP SHARE CAPITAL	0.
LONG TERM DEBT	20749.
SHORT TERM DEBT	0.
FINANCIAL RESOURCES	20749.

(NOTE) Profit and loss calculation in this case is estimated basing on increased or decreased amount of sales and production cost items by the rehabilitation works, and loans and interests necessary for the investment in the rehabilitation works proper as well.
According to the assumption, the funds flow statement is estimated, independently from those of the existing plant with or without rehabilitation. Accordingly, figures in this table does not strictry equal to the difference of those in the following tables for the existing plant with or without rehabilitation.

Table 9.8-2(1) *** ZAMBIA REHABILITATION PROJECT ***
INCOME STATEMENTS (FOR YEARS ENDING MARCH 31)
- EXISTING PLANT IS NOT REHABILITATED - (K'000)

	1982	1983	1984	1985	1986	1987	1988	1989	1990	1991	1992
SALES REVENUE	21132.	19276.	19276.	17795.	17795.	15570.	15570.	15570.	15570.	15570.	15570.
COST OF SALES	16468.	16509.	16509.	16536.	16536.	16583.	16583.	16583.	16583.	16583.	16583.
VARIABLE COST	7492.	7092.	7092.	6772.	6772.	6292.	6292.	6292.	6292.	6292.	6292.
DEPRECIATION & AMORTIZATION	475.	475.	475.	475.	475.	475.	475.	475.	475.	475.	475.
OTHER FIXED COST	8501.	8942.	8942.	9289.	9289.	9816.	9816.	9816.	9816.	9816.	9816.
(INC) IN PRODUCT INVENTORIES	0.	0.	0.	0.	0.	0.	0.	0.	0.	0.	0.
GROSS PROFIT OR (LOSS) ON SALES	4664.	2767.	2767.	1259.	1259.	-1013.	-1013.	-1013.	-1013.	-1013.	-1013.
LESS. SALES EXPENSES	11253.	1253.	1253.	1253.	1253.	1253.	1253.	1253.	1253.	1253.	1253.
OPERATING PROFIT OR (LOSS)	-6589.	1514.	1514.	6.	6.	-2266.	-2266.	-2266.	-2266.	-2266.	-2266.
LESS. INTEREST											
ON LONG TERM DEBT	850.	785.	719.	654.	588.	523.	458.	392.	327.	262.	196.
ON SHORT TERM DEBT	0.	0.	0.	0.	0.	0.	170.	488.	832.	1204.	1607.
NET PROFIT OR (LOSS) BEFORE TAX	-7439.	729.	795.	-647.	-582.	-2789.	-2893.	-3147.	-3425.	-3732.	-4069.
LESS. INCOME TAX	0.	0.	0.	0.	0.	0.	0.	0.	0.	0.	0.
NET PROFIT OR (LOSS) AFTER TAX	-7439.	729.	795.	-647.	-582.	-2789.	-2893.	-3147.	-3425.	-3732.	-4069.

Table 9.8-2(2) *** ZAMBIA REHABILITATION PROJECT ***
INCOME STATEMENTS (FOR YEARS ENDING MARCH 31)
- EXISTING PLANT IS NOT REHABILITATED - (K'000)

	1993	1994
SALES REVENUE	15570.	15570.
COST OF SALES	16583.	16583.
VARIABLE COST	6292.	6292.
DEPRECIATION & AMORTIZATION	475.	475.
OTHER FIXED COST	9816.	9816.
(INC) IN PRODUCT INVENTORIES	0.	0.
GROSS PROFIT OR (LOSS) ON SALES	-1013.	-1013.
LESS. SALES EXPENSES	1253.	1253.
OPERATING PROFIT OR (LOSS)	-2266.	-2266.
LESS. INTEREST		
ON LONG TERM DEBT	131.	65.
ON SHORT TERM DEBT	2043.	2517.
NET PROFIT OR (LOSS) BEFORE TAX	-4440.	-4848.
LESS. INCOME TAX	0.	0.
NET PROFIT OR (LOSS) AFTER TAX	-4440.	-4848.

Table 9.8-3(I) *** ZAMBIA REHABILITATION PROJECT ***
INCOME STATEMENTS (FOR YEARS ENDING MARCH 31)
- EXISTING PLANT IS REHABILITATED - (K'000)

	1982	1983	1984	1985	1986	1987	1988	1989	1990	1991	1992
SALES REVENUE	21132.	19276.	19276.	15210.	30420.	30420.	30420.	30420.	30420.	30420.	30420.
COST OF SALES	16468.	16509.	16509.	18701.	24561.	24561.	24561.	24561.	24561.	24561.	24561.
VARIABLE COST	7492.	7092.	7092.	7714.	13989.	13989.	13989.	13989.	13989.	13989.	13989.
DEPRECIATION & AMORTIZATION	475.	475.	475.	1273.	2071.	2071.	2071.	2071.	2071.	2071.	2071.
OTHER FIXED COST	8501.	8942.	8942.	7714.	8501.	8501.	8501.	8501.	8501.	8501.	8501.
(INC) IN PRODUCT INVENTORIES	0.	0.	0.	0.	0.	0.	0.	0.	0.	0.	0.
GROSS PROFIT OR (LOSS) ON SALES	4664.	2767.	2767.	-1491.	5859.	5859.	5859.	5859.	5859.	5859.	5859.
LESS. SALES EXPENSES	11253.	1253.	1253.	1253.	1253.	1253.	1253.	1253.	1253.	1253.	1253.
OPERATING PROFIT OR (LOSS)	-6589.	1514.	1514.	-2744.	4606.	4606.	4606.	4606.	4606.	4606.	4606.
LESS. INTEREST											
ON LONG TERM DEBT	850.	785.	719.	1691.	2560.	2287.	2014.	1741.	1468.	1195.	922.
ON SHORT TERM DEBT	0.	0.	0.	0.	177.	67.	0.	0.	0.	0.	0.
NET PROFIT OR (LOSS) BEFORE TAX	-7439.	729.	795.	-4436.	1870.	2252.	2592.	2865.	3138.	3411.	3683.
LESS. INCOME TAX	0.	0.	0.	0.	0.	0.	0.	511.	1569.	1705.	1842.
NET PROFIT OR (LOSS) AFTER TAX	-7439.	729.	795.	-4436.	1870.	2252.	2592.	2354.	1569.	1705.	1842.

Table 9.8-3(2) *** ZAMBIA REHABILITATION PROJECT ***
INCOME STATEMENTS (FOR YEARS ENDING MARCH 31)
- EXISTING PLANT IS REHABILITATED - (K'000)

	1993	1994
SALES REVENUE	30420.	30420.
COST OF SALES	24561.	24561.
VARIABLE COST	13989.	13989.
DEPRECIATION & AMORTIZATION	2071.	2071.
OTHER FIXED COST	8501.	8501.
(INC) IN PRODUCT INVENTORIES	0.	0.
GROSS PROFIT OR (LOSS) ON SALES	5859.	5859.
LESS. SALES EXPENSES	1253.	1253.
OPERATING PROFIT OR (LOSS)	4606.	4606.
LESS. INTEREST		
ON LONG TERM DEBT	649.	377.
ON SHORT TERM DEBT	0.	0.
NET PROFIT OR (LOSS) BEFORE TAX	3956.	4229.
LESS. INCOME TAX	1978.	2115.
NET PROFIT OR (LOSS) AFTER TAX	1978.	2115.

Table 9.8-4(1) *** ZAMBIA REHABILITATION PROJECT ***
FUNDS FLOW STATEMENTS (FOR YEARS ENDING MARCH 31)
- EXISTING PLANT IS REHABILITATED - (K'000)

	1981	1982	1983	1984	1985	1986	1987	1988	1989	1990	1991
SOURCES OF FUNDS	22880.	-2329.	16063.	4880.	295.	7346.	6677.	6677.	6677.	6677.	6677.
CASH GENERATED FROM OPERATION	0.	-6114.	1989.	1989.	-1471.	6677.	6677.	6677.	6677.	6677.	6677.
PROFIT BEFORE TAX, INTEREST	0.	-6589.	1514.	1514.	-2744.	4606.	4606.	4606.	4606.	4606.	4606.
DEPRECIATION & AMORTIZATION	0.	475.	475.	475.	1273.	2071.	2071.	2071.	2071.	2071.	2071.
FINANCIAL RESOURCES	22880.	3785.	14074.	2890.	1766.	669.	0.	0.	0.	0.	0.
SHARE CAPITAL	12880.	0.	0.	0.	0.	0.	0.	0.	0.	0.	0.
LONG TERM DEBT	10000.	3785.	14074.	2890.	0.	0.	0.	0.	0.	0.	0.
SHORT TERM DEBT	0.	0.	0.	0.	1766.	669.	0.	0.	0.	0.	0.
INCREASE IN ACCT PAYABLE	0.	0.	0.	0.	0.	0.	0.	0.	0.	0.	0.
USES OF FUNDS	12880.	1619.	5337.	16563.	5389.	7346.	5867.	4858.	4585.	4823.	5608.
INVESTMENT IN FIXED ASSET	6180.	0.	3783.	15075.	1891.	0.	0.	0.	0.	0.	0.
LAND AND SITE IMPROVEMENT	0.	0.	0.	0.	0.	0.	0.	0.	0.	0.	0.
CONSTRUCTED FACILITIES	6180.	0.	3373.	13440.	1771.	0.	0.	0.	0.	0.	0.
PRE-INVEST. & START-UP EXP	0.	0.	0.	0.	0.	0.	0.	0.	0.	0.	0.
INTEREST DURING CONSTRUCTN	0.	0.	410.	1635.	120.	0.	0.	0.	0.	0.	0.
INCREASE IN CURRENT ASSET OTHER THAN CASH	6700.	0.	0.	0.	0.	0.	0.	0.	0.	0.	0.
INCR(DECR) ACC'T RECEIVABLE	0.	0.	0.	0.	0.	0.	0.	0.	0.	0.	0.
INCR(DECR) IN INVENTORIES											
PRODUCTS	0.	0.	0.	0.	0.	0.	0.	0.	0.	0.	0.
MATERIALS	6700.	0.	0.	0.	0.	0.	0.	0.	0.	0.	0.
DEBT SERVICES	0.	1619.	1554.	1488.	3498.	7346.	5867.	4858.	4585.	4312.	4039.
REPAYMENT OF LONG TERM DEBT	0.	769.	769.	769.	1807.	2844.	2844.	2844.	2844.	2844.	2844.
REPAYMNT OF SHORT TERM DEBT	0.	0.	0.	0.	0.	1766.	669.	0.	0.	0.	0.
INTEREST ON LONG TERM DEBT	0.	850.	785.	719.	1691.	2560.	2287.	2014.	1741.	1468.	1195.
INTEREST ON SHORT TERM DEBT	0.	0.	0.	0.	0.	177.	67.	0.	0.	0.	0.
INCOME TAX PAYMENT	0.	0.	0.	0.	0.	0.	0.	0.	0.	511.	1569.
DIVIDENDS PAYMENT	0.	0.	0.	0.	0.	0.	0.	0.	0.	0.	0.
CASH INCREASE OR (DECREASE)	10000.	-3949.	10727.	-11684.	-5094.	0.	811.	1819.	2092.	1854.	1069.
BEGINNING CASH BALANCE	0.	10000.	6051.	16778.	5094.	0.	0.	811.	2630.	4722.	6577.
ENDING CASH BALANCE	10000.	6051.	16778.	5094.	0.	0.	811.	2630.	4722.	6577.	7646.

Table 9.8-4(2) *** ZAMBIA REHABILITATION PROJECT ***
FUNDS FLOW STATEMENTS (FOR YEARS ENDING MARCH 31)
- EXISTING PLANT IS REHABILITATED - (K'000)

	1992	1993	1994
SOURCES OF FUNDS	6677.	6677.	6677.
CASH GENERATED FROM OPERATION	6677.	6677.	6677.
PROFIT BEFORE TAX, INTEREST	4606.	4606.	4606.
DEPRECIATION & AMORTIZATION	2071.	2071.	2071.
FINANCIAL RESOURCES	0.	0.	0.
SHARE CAPITAL	0.	0.	0.
LONG TERM DEBT	0.	0.	0.
SHORT TERM DEBT	0.	0.	0.
INCREASE IN ACCT PAYABLE	0.	0.	0.
USES OF FUNDS	5472.	5335.	5199.
INVESTMENT IN FIXED ASSET	0.	0.	0.
LAND AND SITE IMPROVEMENT	0.	0.	0.
CONSTRUCTED FACILITIES	0.	0.	0.
PRE-INVEST. & START-UP EXP	0.	0.	0.
INTEREST DURING CONSTRUCTN	0.	0.	0.
INCREASE IN CURRENT ASSET OTHER THAN CASH	0.	0.	0.
INCR(DECR) ACC'T RECEIVABLE	0.	0.	0.
INCR(DECR) IN INVENTORIES			
PRODUCTS	0.	0.	0.
MATERIALS	0.	0.	0.
DEBT SERVICES	3766.	3494.	3221.
REPAYMENT OF LONG TERM DEBT	2844.	2844.	2844.
REPAYMNT OF SHORT TERM DEBT	0.	0.	0.
INTEREST ON LONG TERM DEBT	922.	649.	377.
INTEREST ON SHORT TERM DEBT	0.	0.	0.
INCOME TAX PAYMENT	1705.	1842.	1978.
DIVIDENDS PAYMENT	0.	0.	0.
CASH INCREASE OR (DECREASE)	1205.	1342.	1478.
BEGINNING CASH BALANCE	7646.	8851.	10193.
ENDING CASH BALANCE	8851.	10193.	11671.

Table 9.8-5(1) *** ZAMBIA REHABILITATION PROJECT ***
BALANCE SHEET (FOR YEARS ENDING MARCH 31)
- EXISTING PLANT IS REHABILITATED - (K'000)

	1981	1982	1983	1984	1985	1986	1987	1988	1989	1990	1991
ASSETS	22880.	18456.	32490.	35406.	30929.	28858.	27597.	27345.	27366.	27149.	26146.
CURRENT ASSETS	16700.	12751.	23478.	11794.	6700.	6700.	7511.	9330.	11422.	13277.	14346.
CASH	10000.	6051.	16778.	5094.	0.	0.	811.	2630.	4722.	6577.	7646.
ACCOUNTS RECEIVABLE	0.	0.	0.	0.	0.	0.	0.	0.	0.	0.	0.
INVENTORIES											
PRODUCTS	0.	0.	0.	0.	0.	0.	0.	0.	0.	0.	0.
MATERIALS	6700.	6700.	6700.	6700.	6700.	6700.	6700.	6700.	6700.	6700.	6700.
NET FIXED ASSETS	6180.	5705.	9012.	23612.	24229.	22158.	20087.	18015.	15944.	13872.	11801.
INVESTMENT	6180.	6180.	9963.	25038.	26929.	26929.	26929.	26929.	26929.	26929.	26929.
LAND & SITE IMPROVEMENT	0.	0.	0.	0.	0.	0.	0.	0.	0.	0.	0.
CONSTRUCTED FACILITIES	6180.	6180.	9553.	22993.	24764.	24764.	24764.	24764.	24764.	24764.	24764.
PRE-INVEST. & START-UP EXP	0.	0.	0.	0.	0.	0.	0.	0.	0.	0.	0.
INTEREST DURING CONSTRUCTN	0.	0.	410.	2045.	2165.	2165.	2165.	2165.	2165.	2165.	2165.
LESS-DEPRECIATN & AMORTIZTN	0.	475.	951.	1426.	2700.	4771.	6842.	8914.	10985.	13057.	15128.
LIABILITIES	10000.	13015.	26320.	28441.	28400.	24459.	20946.	18102.	15769.	13983.	11275.
CURRENT LIABILITIES	769.	769.	769.	1807.	4610.	3513.	2844.	2844.	3355.	4413.	4549.
ACCOUNTS PAYABLE	0.	0.	0.	0.	0.	0.	0.	0.	0.	0.	0.
INCOME TAX PAYABLE	0.	0.	0.	0.	0.	0.	0.	0.	511.	1569.	1705.
DIVIDENDS PAYABLE	0.	0.	0.	0.	0.	0.	0.	0.	0.	0.	0.
CURRENT PORTION OF DEBT											
LONG TERM DEBT	769.	769.	769.	1807.	2844.	2844.	2844.	2844.	2844.	2844.	2844.
SHORT TERM DEBT	0.	0.	0.	0.	1766.	669.	0.	0.	0.	0.	0.
FIXED LIABILITIES	9231.	12246.	25551.	26635.	23790.	20946.	18102.	15258.	12414.	9570.	6726.
LONG TERM DEBT BALANCE	9231.	12246.	25551.	26635.	23790.	20946.	18102.	15258.	12414.	9570.	6726.
STOCK HOLDERS EQUITY	12880.	5441.	6170.	6965.	2529.	4399.	6651.	9243.	11597.	13166.	14871.
SHARE CAPITAL	12880.	12880.	12880.	12880.	12880.	12880.	12880.	12880.	12880.	12880.	12880.
RETAINED ERNINGS	0.	-7439.	-6710.	-5915.	-10351.	-8481.	-6229.	-3637.	-1283.	286.	1991.

Table 9.8—5(2) *** ZAMBIA REHABILITATION PROJECT ***
BALANCE SHEET (FOR YEARS ENDING MARCH 31)
- EXISTING PLANT IS REHABILITATED - (K'000)

	1992	1993	1994
ASSETS	25280.	24551.	23958.
CURRENT ASSETS	15551.	16893.	18371.
CASH	8851.	10193.	11671.
ACCOUNTS RECEIVABLE	0.	0.	0.
INVENTORIES			
PRODUCTS	0.	0.	0.
MATERIALS	6700.	6700.	6700.
NET FIXED ASSETS	9729.	7658.	5586.
INVESTMENT	26929.	26929.	26929.
LAND & SITE IMPROVEMENT	0.	0.	0.
CONSTRUCTED FACILITIES	24764.	24764.	24764.
PRE-INVEST. & START-UP EXP	0.	0.	0.
INTEREST DURING CONSTRUCTN	2165.	2165.	2165.
LESS.DEPRECIATN & AMORTIZTN	17200.	19271.	21343.
LIABILITIES	8567.	5060.	3152.
CURRENT LIABILITIES	4686.	4022.	3152.
ACCOUNTS PAYABLE	0.	0.	0.
INCOME TAX PAYABLE	1842.	1978.	2115.
DIVIDENDS PAYABLE	0.	0.	0.
CURRENT PORTION OF DEBT			
LONG TERM DEBT	2844.	2844.	1037.
SHORT TERM DEBT	0.	0.	0.
FIXED LIABILITIES	3882.	1037.	-0.
LONG TERM DEBT BALANCE	3882.	1037.	-0.
STOCK HOLDERS EQUITY	16713.	18691.	20806.
SHARE CAPITAL	12880.	12880.	12880.
RETAINED ERNINGS	3833.	5811.	7926.

Table 9.8-6(1) *** ZAMBIA REHABILITATION PROJECT ***
PRODUCTION COST STATEMENTS
- EXISTING PLANT IS REHABILITATED - (K'000)

	1982	1983	1984	1985	1986	1987	1988	1989	1990	1991	1992
PRODUCTION	41680.	38020.	38020.	39000.	60000.	60000.	60000.	60000.	60000.	60000.	60000.
COAL	3148.	2872.	2872.	0.	0.	0.	0.	0.	0.	0.	0.
RAW GAS	0.	0.	0.	3393.	6786.	6786.	6786.	6786.	6786.	6786.	6786.
NH3 FROM NEW PLANT	0.	0.	0.	1554.	3107.	3107.	3107.	3107.	3107.	3107.	3107.
RAW MATERIALS COST	3148.	2872.	2872.	4946.	9893.	9893.	9893.	9893.	9893.	9893.	9893.
NH3	642.	506.	506.	375.	751.	751.	751.	751.	751.	751.	751.
HNO3	8.	7.	7.	6.	12.	12.	12.	12.	12.	12.	12.
A/N	762.	695.	695.	548.	1097.	1097.	1097.	1097.	1097.	1097.	1097.
CHEMICALS & BAG	1412.	1208.	1208.	930.	1859.	1859.	1859.	1859.	1859.	1859.	1859.
CATALYST	135.	135.	135.	135.	135.	135.	135.	135.	135.	135.	135.
ELECTRICITY	1305.	1305.	1305.	1305.	1305.	1305.	1305.	1305.	1305.	1305.	1305.
FUEL	1492.	1492.	1492.	398.	797.	797.	797.	797.	797.	797.	797.
UTILITIES COST	2797.	2797.	2797.	1703.	2102.	2102.	2102.	2102.	2102.	2102.	2102.
VARIABLE COST	7492.	7092.	7092.	7714.	13989.	13989.	13989.	13989.	13989.	13989.	13989.
DEPRECIATION (EXISTING)	475.	475.	475.	475.	475.	475.	475.	475.	475.	475.	475.
DEPRECIATION (REHABILITATION)	0.	0.	0.	715.	1430.	1430.	1430.	1430.	1430.	1430.	1430.
DEPRECIATION	475.	475.	475.	1190.	1905.	1905.	1905.	1905.	1905.	1905.	1905.
AMORTIZATION	0.	0.	0.	83.	167.	167.	167.	167.	167.	167.	167.
DEPRECIATION & AMORTIZATION	475.	475.	475.	1273.	2071.	2071.	2071.	2071.	2071.	2071.	2071.
LABOUR COST	4361.	4361.	4361.	4361.	4361.	4361.	4361.	4361.	4361.	4361.	4361.
OVERHEAD	2565.	2565.	2565.	2565.	2565.	2565.	2565.	2565.	2565.	2565.	2565.
REPAIRS & MAINTENANCE	1575.	2016.	2016.	788.	1575.	1575.	1575.	1575.	1575.	1575.	1575.
DIRECT FIXED COST	8501.	8942.	8942.	7714.	8501.	8501.	8501.	8501.	8501.	8501.	8501.
EX-FACTORY PRODUCTION COST	16468.	16509.	16509.	16701.	24561.	24561.	24561.	24561.	24561.	24561.	24561.
UNIT DIRECT OPERATING COST	0.3951	0.4342	0.4342	0.5567	0.4094	0.4094	0.4094	0.4094	0.4094	0.4094	0.4094
ADMINISTRATIVE & SALES EXP	1253.	1253.	1253.	1253.	1253.	1253.	1253.	1253.	1253.	1253.	1253.
LOSS CARRY OVER (PAST YEARS)	10000.	0.	0.	0.	0.	0.	0.	0.	0.	0.	0.
ADMINISTRATIVE & SALES EXP	11253.	1253.	1253.	1253.	1253.	1253.	1253.	1253.	1253.	1253.	1253.
INTEREST ON EXISTING LOAN	850.	785.	719.	654.	588.	523.	458.	392.	327.	262.	196.
INTEREST ON ADDITIONAL LOAN	0.	0.	0.	1037.	1971.	1764.	1556.	1349.	1141.	934.	726.
INTEREST ON LONG-TERM DEBT	850.	785.	719.	1691.	2560.	2287.	2014.	1741.	1468.	1195.	922.
INTEREST ON SHORT-TERM DEBT	0.	0.	0.	0.	177.	67.	0.	0.	0.	0.	0.
TOTAL PRODUCTION COST	28571.	18547.	18481.	19646.	28550.	28168.	27820.	27555.	27202.	27009.	26737.
UNIT PRODUCTION COST	0.6855	0.4878	0.4861	0.6549	0.4758	0.4695	0.4638	0.4593	0.4547	0.4502	0.4456

Table 9.8—6(2) *** ZAMBIA REHABILITATION PROJECT ***
PRODUCTION COST STATEMENTS
- EXISTING PLANT IS REHABILITATED - (K'000)

	1993	1994
PRODUCTION	60000.	60000.
COAL	0.	0.
RAW GAS	6786.	6786.
NH3 FROM NEW PLANT	3107.	3107.
RAW MATERIALS COST	9893.	9893.
NH3	751.	751.
HNO3	12.	12.
A/N	1097.	1097.
CHEMICALS & BAG	1859.	1859.
CATALYST	135.	135.
ELECTRICITY	1305.	1305.
FUEL	797.	797.
UTILITIES COST	2102.	2102.
VARIABLE COST	13989.	13989.
DEPRECIATION (EXISTING)	475.	475.
DEPRECIATION (REHABILITATION)	1430.	1430.
DEPRECIATION	1905.	1905.
AMORTIZATION	167.	167.
DEPRECIATION & AMORTIZATION	2071.	2071.
LABOUR COST	4361.	4361.
OVERHEAD	2565.	2565.
REPAIRS & MAINTENANCE	1575.	1575.
DIRECT FIXED COST	8501.	8501.
EX-FACTORY PRODUCTION COST	24561.	24561.
UNIT DIRECT OPERATING COST	0.4094	0.4094
ADMINISTRATIVE & SALES EXP	1253.	1253.
LOSS CARRY OVER (PAST YEARS)	0.	0.
ADMINISTRATIVE & SALES EXP	1253.	1253.
INTEREST ON EXIST'G LOAN	131.	65.
INTEREST ON ADDITIONAL LOAN	519.	311.
INTEREST ON LONG-TERM DEBT	649.	311.
INTEREST ON SHORT-TERM DEBT	0.	0.
TOTAL PRODUCTION COST	26464.	26191.
UNIT PRODUCTION COST	0.4411	0.4365

Table 9.8—7 *** ZAMBIA REHABILITATION PROJECT ***
IRR CALCULATION ON TOTAL INVESTMENT
- EXISTING PLANT IS REHABILITATED - (K'000)

YEAR	TOTAL INVESTMENT	PROFIT BEFORE TAX	DEPRECIATN	INTEREST ON L-T DEBT	RETURN BEFORE TAX	DISCOUNT FACTOR	(BEFORE TAX) PRESENT VALUE INVEST.	(BEFORE TAX) PRESENT VALUE RETURN	(LESS) INCOME TAX	RETURN AFTER TAX	DISCOUNT FACTOR	(AFTER TAX) PRESENT VALUE INVEST.	(AFTER TAX) PRESENT VALUE RETURN
1981	12880.	0.	0.	0.	0.	1.0000	12880.	0.	0.	0.	1.0000	12880.	0.
1982	10000.	-7439.	475.	850.	-6114.	0.9310	9310.	-5692.	0.	-6114.	0.9445	9445.	-5775.
1983	3373.	729.	475.	785.	1989.	0.8668	2924.	1724.	0.	1989.	0.8921	3009.	1775.
1984	13440.	795.	475.	719.	1989.	0.8070	10846.	1605.	0.	1989.	0.8426	11325.	1676.
1985	1771.	-4436.	1273.	1691.	-1471.	0.7513	1331.	-1105.	0.	-1471.	0.7959	1410.	-1171.
1986	0.	1870.	2071.	2560.	6501.	0.6995	0.	4547.	0.	6501.	0.7517	0.	4887.
1987	0.	2252.	2071.	2287.	6610.	0.6513	0.	4305.	0.	6610.	0.7100	0.	4693.
1988	0.	2592.	2071.	2014.	6677.	0.6063	0.	4049.	0.	6677.	0.6706	0.	4478.
1989	0.	2865.	2071.	1741.	6677.	0.5645	0.	3769.	511.	6167.	0.6334	0.	3906.
1990	0.	3138.	2071.	1468.	6677.	0.5256	0.	3509.	1569.	5108.	0.5983	0.	3056.
1991	0.	3411.	2071.	1195.	6677.	0.4893	0.	3267.	1705.	4972.	0.5651	0.	2810.
1992	0.	3683.	2071.	922.	6677.	0.4556	0.	3042.	1842.	4836.	0.5337	0.	2581.
1993	0.	3956.	2071.	649.	6677.	0.4241	0.	2832.	1978.	4699.	0.5041	0.	2369.
1994	-22286.	4229.	2071.	377.	6677.	0.3949	-8800.	2637.	2115.	4563.	0.4761	-10611.	2172.
TOTAL	19178.				56246.		28490.	28490.		46527.		27457.	27457.

***** INTERNAL RATE OF RETURN ***** 7.41 PER CENT (BEFORE TAX) 5.87 PER CENT (AFTER TAX)

***** PAY-OUT PERIOD ***** 11.11 YEAR (BEFORE TAX) 12.36 YEAR (AFTER TAX)
(THE YEAR WHEN THE TOTAL CAPITAL COST WILL BE PAID OUT BY ACCUMULATED TOTAL RETURN, FROM THE BEG. OF OPERATION)

CAPITAL REQUIREMENTS

LAND AND SITE IMPROVEMENT	0.
EXISTING PLANT	6180.
REHABILITATION	18584.
CONSTRUCTED FACILITIES	24764.
PRE-INVEST AND START-UP EXP	0.
INTEREST DURING CONSTRUCTION	2165.
TOTAL FIXED CAPITAL	26929.
INITIAL WORKING CAPITAL	16700.
TOTAL CAPITAL COST	43629.

SOURCE OF FUNDS

PAID-UP SHARE CAPITAL	12880.
EXISTING LOAN	10000.
ADDITIONAL LOAN	20749.
LONG TERM DEBT	30749.
SHORT TERM DEBT	0.
FINANCIAL RESOURCES	43629.

Table 9.8-8(1) *** ZAMBIA REHABILITATION PROJECT ***
INCOME STATEMENTS (FOR YEARS ENDING MARCH 31)
- INTEGRATION OF EXISTING & EXPANSION PLANT - (K'000)

	1982	1983	1984	1985	1986	1987	1988	1989	1990	1991	1992
SALES REVENUE	83132.	92333.	112847.	111950.	121430.	121430.	121430.	121430.	121430.	121430.	121430.
COST OF SALES	71151.	75953.	85980.	83818.	88789.	88789.	88789.	88789.	88789.	88789.	88789.
VARIABLE COST	38561.	42503.	48447.	46715.	50101.	50101.	50101.	50101.	50101.	50101.	50101.
DEPRECIATION & AMORTIZATION	21983.	21983.	21983.	22781.	23579.	23579.	23579.	23579.	23579.	23579.	23579.
OTHER FIXED COST	15109.	15550.	15550.	14322.	15109.	15109.	15109.	15109.	15109.	15109.	15109.
(INC) IN PRODUCT INVENTORIES	-4502.	-4003.	0.	0.	0.	0.	0.	0.	0.	0.	0.
GROSS PROFIT OR (LOSS) ON SALES	11981.	16380.	26867.	28132.	32641.	32641.	32641.	32641.	32641.	32641.	32641.
LESS. SALES EXPENSES	11459.	1459.	1459.	1459.	1459.	1459.	1459.	1459.	1459.	1459.	1459.
OPERATING PROFIT OR (LOSS)	522.	14921.	25408.	26673.	31182.	31182.	31182.	31182.	31182.	31182.	31182.
LESS. INTEREST											
ON LONG TERM DEBT	18470.	17049.	15628.	15245.	14758.	13130.	11502.	9873.	8245.	6617.	4989.
ON SHORT TERM DEBT	0.	450.	0.	0.	0.	0.	0.	0.	0.	0.	0.
NET PROFIT OR (LOSS) BEFORE TAX	-17948.	-2579.	9780.	11428.	16424.	18052.	19681.	21309.	22937.	24565.	26194.
LESS. INCOME TAX	0.	0.	0.	0.	0.	9026.	9840.	10654.	11469.	12283.	13097.
NET PROFIT OR (LOSS) AFTER TAX	-17948.	-2579.	9780.	11428.	16424.	9026.	9840.	10654.	11469.	12283.	13097.

Table 9.8—8(2) *** ZAMBIA REHABILITATION PROJECT ***
INCOME STATEMENTS (FOR YEARS ENDING MARCH 31)
- INTEGRATION OF EXISTING & EXPANSION PLANT - (K'000)

	1993	1994
SALES REVENUE	121430.	121430.
COST OF SALES	88789.	88789.
VARIABLE COST	50101.	50101.
DEPRECIATION & AMORTIZATION	23579.	23579.
OTHER FIXED COST	15109.	15109.
(INC) IN PRODUCT INVENTORIES	0.	0.
GROSS PROFIT OR (LOSS) ON SALES	32641.	32641.
LESS. SALES EXPENSES	1459.	1459.
OPERATING PROFIT OR (LOSS)	31182.	31182.
LESS. INTEREST		
ON LONG TERM DEBT	3360.	1732.
ON SHORT TERM DEBT	0.	0.
NET PROFIT OR (LOSS) BEFORE TAX	27822.	29450.
LESS. INCOME TAX	13911.	14725.
NET PROFIT OR (LOSS) AFTER TAX	13911.	14725.

Table 9.8-9(1) *** ZAMBIA REHABILITATION PROJECT ***
FUNDS FLOW STATEMENTS (FOR YEARS ENDING MARCH 31)
- INTEGRATION OF EXISTING & EXPANSION PLANT - (K'000)

	1981	1982	1983	1984	1985	1986	1987	1988	1989	1990	1991
SOURCES OF FUNDS	317280.	30792.	50970.	50282.	49455.	54761.	54761.	54761.	54761.	54761.	54761.
CASH GENERATED FROM OPERATION	0.	22505.	36904.	47391.	49455.	54761.	54761.	54761.	54761.	54761.	54761.
PROFIT BEFORE TAX, INTEREST	0.	522.	14921.	25408.	26673.	31182.	31182.	31182.	31182.	31182.	31182.
DEPRECIATION & AMORTIZATION	0.	21983.	21983.	21983.	22781.	23579.	23579.	23579.	23579.	23579.	23579.
FINANCIAL RESOURCES	317280.	8287.	14074.	2890.	0.	0.	0.	0.	0.	0.	0.
SHARE CAPITAL	131080.	0.	0.	0.	0.	0.	0.	0.	0.	0.	0.
LONG TERM DEBT	186200.	3785.	14074.	2890.	0.	0.	0.	0.	0.	0.	0.
SHORT TERM DEBT	0.	4502.	0.	0.	0.	0.	0.	0.	0.	0.	0.
INCREASE IN ACCT PAYABLE	0.	0.	0.	0.	0.	0.	0.	0.	0.	0.	0.
USES OF FUNDS	307280.	37296.	44191.	45026.	32497.	31156.	29528.	36926.	36112.	35297.	34483.
INVESTMENT IN FIXED ASSET	300580.	0.	3783.	15075.	1891.	0.	0.	0.	0.	0.	0.
LAND AND SITE IMPROVEMENT	0.	0.	0.	0.	0.	0.	0.	0.	0.	0.	0.
CONSTRUCTED FACILITIES	300580.	0.	3373.	13440.	1771.	0.	0.	0.	0.	0.	0.
PRE-INVEST. & START-UP EXP	0.	0.	0.	0.	0.	0.	0.	0.	0.	0.	0.
INTEREST DURING CONSTRUCTN	0.	0.	410.	1635.	120.	0.	0.	0.	0.	0.	0.
INCREASE IN CURRENT ASSET OTHER THAN CASH	6700.	4502.	4003.	0.	0.	0.	0.	0.	0.	0.	0.
INCR(DECR) ACC T RECEIVABLE	0.	0.	0.	0.	0.	0.	0.	0.	0.	0.	0.
INCR(DECR) IN INVENTORIES											
PRODUCTS	0.	4502.	4083.	0.	0.	0.	0.	0.	0.	0.	0.
MATERIALS	6700.	0.	0.	0.	0.	0.	0.	0.	0.	0.	0.
DEBT SERVICES	0.	32793.	36325.	29952.	30606.	31156.	29528.	27900.	26271.	24643.	23015.
REPAYMENT OF LONG TERM DEBT	0.	14323.	14323.	14323.	15361.	16398.	16398.	16398.	16398.	16398.	16398.
REPAYMNT OF SHORT TERM DEBT	0.	0.	4502.	0.	0.	0.	0.	0.	0.	0.	0.
INTEREST ON LONG TERM DEBT	0.	18470.	17049.	15628.	15245.	14758.	13130.	11502.	9873.	8245.	6617.
INTEREST ON SHORT TERM DEBT	0.	0.	450.	0.	0.	0.	0.	0.	0.	0.	0.
INCOME TAX PAYMENT	0.	0.	0.	0.	0.	0.	0.	9026.	9840.	10654.	11469.
DIVIDENDS PAYMENT	0.	0.	0.	0.	0.	0.	0.	0.	0.	0.	0.
CASH INCREASE OR (DECREASE)	10000.	-6504.	6787.	5255.	16958.	23605.	25233.	17836.	18650.	19464.	20278.
BEGINNING CASH BALANCE	0.	10000.	3496.	10283.	15538.	32496.	56101.	81335.	99170.	117820.	137284.
ENDING CASH BALANCE	10000.	3496.	10283.	15538.	32496.	56101.	81335.	99170.	117820.	137284.	157562.

Table 9.8-9(2) *** ZAMBIA REHABILITATION PROJECT ***
FUNDS FLOW STATEMENTS (FOR YEARS ENDING MARCH 31)
- INTEGRATION OF EXISTING & EXPANSION PLANT - (K'000)

	1992	1993	1994
SOURCES OF FUNDS	54761.	54761.	54761.
CASH GENERATED FROM OPERATION	54761.	54761.	54761.
PROFIT BEFORE TAX, INTEREST	31102.	31102.	31102.
DEPRECIATION & AMORTIZATION	23579.	23579.	23579.
FINANCIAL RESOURCES	0.	0.	0.
SHARE CAPITAL	0.	0.	0.
LONG TERM DEBT	0.	0.	0.
SHORT TERM DEBT	0.	0.	0.
INCREASE IN ACCT PAYABLE	0.	0.	0.
USES OF FUNDS	33669.	32855.	32041.
INVESTMENT IN FIXED ASSET	0.	0.	0.
LAND AND SITE IMPROVEMENT	0.	0.	0.
CONSTRUCTED FACILITIES	0.	0.	0.
PRE-INVEST. & START-UP EXP	0.	0.	0.
INTEREST DURING CONSTRUCTN	0.	0.	0.
INCREASE IN CURRENT ASSET OTHER THAN CASH	0.	0.	0.
INCR(DECR) ACC T RECEIVABLE	0.	0.	0.
INCR(DECR) IN INVENTORIES			
PRODUCTS	0.	0.	0.
MATERIALS	0.	0.	0.
DEBT SERVICES	21306.	19758.	18130.
REPAYMENT OF LONG TERM DEBT	16398.	16398.	16398.
REPAYMNT OF SHORT TERM DEBT	0.	0.	0.
INTEREST ON LONG TERM DEBT	4989.	3360.	1732.
INTEREST ON SHORT TERM DEBT	0.	0.	0.
INCOME TAX PAYMENT	12283.	13097.	13911.
DIVIDENDS PAYMENT	0.	0.	0.
CASH INCREASE OR (DECREASE)	21092.	21906.	22720.
BEGINNING CASH BALANCE	157562.	178654.	200560.
ENDING CASH BALANCE	178654.	200560.	223280.

Table 9.8-10(1) *** ZAMBIA REHABILITATION PROJECT ***
BALANCE SHEET (FOR YEARS ENDING MARCH 31)
- INTEGRATION OF EXISTING & EXPANSION PLANT - (K'000)

	1981	1982	1983	1984	1985	1986	1987	1988	1989	1990	1991
ASSETS	317280.	293296.	285965.	284313.	280380.	280406.	282061.	276317.	271388.	267272.	263971.
CURRENT ASSETS	16700.	14699.	25569.	30824.	47702.	71387.	96620.	114456.	133106.	152570.	172848.
CASH	10000.	3496.	10283.	15538.	32496.	56101.	81335.	99170.	117820.	137284.	157562.
ACCOUNTS RECEIVABLE	0.	0.	0.	0.	0.	0.	0.	0.	0.	0.	0.
INVENTORIES											
PRODUCTS	0.	4502.	8586.	8586.	8586.	8586.	8586.	8586.	8586.	8586.	8586.
MATERIALS	6700.	6700.	6700.	6700.	6700.	6700.	6700.	6700.	6700.	6700.	6700.
NET FIXED ASSETS	300580.	278597.	260397.	253489.	232599.	209020.	185440.	161861.	138282.	114703.	91124.
INVESTMENT	300580.	300580.	304363.	319438.	321329.	321329.	321329.	321329.	321329.	321329.	321329.
LAND & SITE IMPROVEMENT	0.	0.	0.	0.	0.	0.	0.	0.	0.	0.	0.
CONSTRUCTED FACILITIES	300580.	300580.	303953.	317393.	319164.	319164.	319164.	319164.	319164.	319164.	319164.
PRE-INVEST. & START-UP EXP	0.	0.	0.	0.	0.	0.	0.	0.	0.	0.	0.
INTEREST DURING CONSTRUCTN	0.	0.	410.	2045.	2165.	2165.	2165.	2165.	2165.	2165.	2165.
LESS.DEPRECIATN & AMORTIZTN	0.	21983.	43966.	65949.	88730.	112309.	135889.	159468.	183047.	206626.	230205.
LIABILITIES	186200.	180164.	175413.	163980.	148619.	132221.	124049.	109266.	93682.	78098.	62514.
CURRENT LIABILITIES	14323.	18826.	14323.	15361.	16398.	16398.	25424.	26238.	27052.	27867.	28681.
ACCOUNTS PAYABLE	0.	0.	0.	0.	0.	0.	0.	0.	0.	0.	0.
INCOME TAX PAYABLE	0.	0.	0.	0.	0.	0.	9026.	9840.	10654.	11469.	12283.
DIVIDENDS PAYABLE	0.	0.	0.	0.	0.	0.	0.	0.	0.	0.	0.
CURRENT PORTION OF DEBT											
LONG TERM DEBT	14323.	14323.	14323.	15361.	16398.	16398.	16398.	16398.	16398.	16398.	16398.
SHORT TERM DEBT	0.	4502.	0.	0.	0.	0.	0.	0.	0.	0.	0.
FIXED LIABILITIES	171877.	161338.	161089.	148619.	132221.	115823.	99425.	83027.	66629.	50231.	33833.
LONG TERM DEBT BALANCE	171877.	161338.	161089.	148619.	132221.	115823.	99425.	83027.	66629.	50231.	33833.
STOCK HOLDERS EQUITY	131080.	113132.	110553.	120333.	131761.	148185.	157211.	167052.	177706.	189175.	201457.
SHARE CAPITAL	131080.	131080.	131080.	131080.	131080.	131080.	131080.	131080.	131080.	131080.	131080.
RETAINED ERNINGS	0.	-17948.	-20527.	-10747.	681.	17105.	26131.	35972.	46626.	58095.	70377.

Table 9.8—10(2) *** ZAMBIA REHABILITATION PROJECT ***
BALANCE SHEET (FOR YEARS ENDING MARCH 31)
- INTEGRATION OF EXISTING & EXPANSION PLANT - (K'000)

	1992	1993	1994
ASSETS	261484.	259811.	258952.
CURRENT ASSETS	193940.	215846.	238566.
CASH	178654.	200560.	223280.
ACCOUNTS RECEIVABLE	0.	0.	0.
INVENTORIES			
PRODUCTS	8586.	8586.	8586.
MATERIALS	6700.	6700.	6700.
NET FIXED ASSETS	67545.	43965.	20386.
INVESTMENT	321329.	321329.	321329.
LAND & SITE IMPROVEMENT	0.	0.	0.
CONSTRUCTED FACILITIES	319164.	319164.	319164.
PRE-INVEST. & START-UP EXP	0.	0.	0.
INTEREST DURING CONSTRUCTN	2165.	2165.	2165.
LESS.DEPRECIATN & AMORTIZTN	253784.	277364.	300943.
LIABILITIES	46930.	31346.	15763.
CURRENT LIABILITIES	29495.	30309.	15763.
ACCOUNTS PAYABLE	0.	0.	0.
INCOME TAX PAYABLE	13097.	13911.	14725.
DIVIDENDS PAYABLE	0.	0.	0.
CURRENT PORTION OF DEBT			
LONG TERM DEBT	16398.	16398.	1037.
SHORT TERM DEBT	0.	0.	0.
FIXED LIABILITIES	17435.	1037.	-0.
LONG TERM DEBT BALANCE	17435.	1037.	-0.
STOCK HOLDERS EQUITY	214554.	228465.	243190.
SHARE CAPITAL	131080.	131080.	131080.
RETAINED ERNINGS	83474.	97385.	112110.

Table 9.8-11(1) *** ZAMBIA REHABILITATION PROJECT ***
PRODUCTION COST STATEMENTS
- INTEGRATION OF EXISTING & EXPANSION PLANT - (K'000)

	1982	1983	1984	1985	1986	1987	1988	1989	1990	1991	1992
PRODUCTION	93669.	99071.	111071.	110000.	128000.	128000.	128000.	128000.	128000.	128000.	128000.
COAL FOR EXISTING	3148.	2872.	2872.	1691.	3382.	3382.	3382.	3382.	3382.	3382.	3382.
COAL FOR EXPANSION	4552.	5309.	6447.	5960.	7065.	7065.	7065.	7065.	7065.	7065.	7065.
H2SO4 FOR COMP C	7.	8.	8.	8.	8.	8.	8.	8.	8.	8.	8.
H2SO4 FOR COMP D	165.	172.	170.	170.	170.	170.	170.	170.	170.	170.	170.
H2SO4 FOR COMP X	34.	35.	35.	35.	35.	35.	35.	35.	35.	35.	35.
H2SO4 FOR A/S	6602.	6874.	6781.	6781.	6781.	6781.	6781.	6781.	6781.	6781.	6781.
RAW MATERIALS COST	14508.	15270.	16312.	14644.	17441.	17441.	17441.	17441.	17441.	17441.	17441.
SUB MATERIALS FOR COMPOUND	15833.	18472.	22431.	22431.	22431.	22431.	22431.	22431.	22431.	22431.	22431.
CHEMICALS & BAG	5382.	5923.	6866.	6802.	7392.	7392.	7392.	7392.	7392.	7392.	7392.
CATALYST & PACKING	1419.	1419.	1419.	1419.	1419.	1419.	1419.	1419.	1419.	1419.	1419.
ELECTRICITY	3602.	3602.	3602.	3602.	3602.	3602.	3602.	3602.	3602.	3602.	3602.
FUEL FOR EXISTING	1492.	1492.	1492.	398.	797.	797.	797.	797.	797.	797.	797.
UTILITIES COST	1419.	1419.	1419.	1419.	1419.	1419.	1419.	1419.	1419.	1419.	1419.
VARIABLE COST	38561.	42503.	48447.	46715.	50101.	50101.	50101.	50101.	50101.	50101.	50101.
DEPRECIATION (EXISTING)	475.	475.	475.	475.	475.	475.	475.	475.	475.	475.	475.
DEPRECIATION (REHABILITATION)	0.	0.	0.	715.	1430.	1430.	1430.	1430.	1430.	1430.	1430.
DEPRECIATION (EXP.MACHINERY)	21108.	21108.	21108.	21108.	21108.	21108.	21108.	21108.	21108.	21108.	21108.
DEPRECIATION (EXP.BUILDING)	400.	400.	400.	400.	400.	400.	400.	400.	400.	400.	400.
DEPRECIATION	21983.	21983.	21983.	22698.	23413.	23413.	23413.	23413.	23413.	23413.	23413.
AMORTIZATION	0.	0.	0.	83.	167.	167.	167.	167.	167.	167.	167.
DEPRECIATION & AMORTIZATION	21983.	21983.	21983.	22781.	23579.	23579.	23579.	23579.	23579.	23579.	23579.
LABOUR COST	8269.	8269.	8269.	8269.	8269.	8269.	8269.	8269.	8269.	8269.	8269.
OVERHEAD	3265.	3265.	3265.	3265.	3265.	3265.	3265.	3265.	3265.	3265.	3265.
REPAIRS & MAINTENANCE	3575.	4016.	4016.	2788.	3575.	3575.	3575.	3575.	3575.	3575.	3575.
DIRECT FIXED COST	15109.	15550.	15550.	14322.	15109.	15109.	15109.	15109.	15109.	15109.	15109.
EX-FACTORY PRODUCTION COST	75654.	80036.	85980.	83818.	88789.	88789.	88789.	88789.	88789.	88789.	88789.
UNIT DIRECT OPERATING COST	0.8075	0.8079	0.7741	0.7620	0.6937	0.6937	0.6937	0.6937	0.6937	0.6937	0.6937
ADMINISTRATIVE & SALES EXP	1459.	1459.	1459.	1459.	1459.	1459.	1459.	1459.	1459.	1459.	1459.
LOSS CARRY OVER (PAST YEARS)	10000.	0.	0.	0.	0.	0.	0.	0.	0.	0.	0.
ADMINISTRATIVE & SALES EXP	11459.	1459.	1459.	1459.	1459.	1459.	1459.	1459.	1459.	1459.	1459.
INTEREST ON EXIST'G LOAN	850.	785.	719.	654.	588.	523.	458.	392.	327.	262.	196.
INTEREST ON ADDITIONAL LOAN	0.	0.	0.	1037.	1971.	1764.	1556.	1349.	1141.	934.	726.
INTEREST ON EXPANSION LOAN	17620.	16265.	14909.	13554.	12198.	10843.	9488.	8132.	6777.	5422.	4066.
INTEREST ON LONG-TERM DEBT	18470.	17049.	15628.	15245.	14758.	13130.	11502.	9873.	8245.	6617.	4989.
INTEREST ON SHORT-TERM DEBT	0.	450.	0.	0.	0.	0.	0.	0.	0.	0.	0.
TOTAL PRODUCTION COST	105583.	98994.	103067.	100522.	105006.	103378.	101750.	100121.	98493.	96865.	95237.
UNIT PRODUCTION COST	1.1269	0.9992	0.9279	0.9138	0.8204	0.8076	0.7949	0.7822	0.7695	0.7568	0.7440

Table 9.8-11(2) *** ZAMBIA REHABILITATION PROJECT ***
PRODUCTION COST STATEMENTS
- INTEGRATION OF EXISTING & EXPANSION PLANT - (K'000)

	1993	1994
PRODUCTION	128000.	128000.
COAL FOR EXISTING	3382.	3382.
COAL FOR EXPANSION	7065.	7065.
H2SO4 FOR COMP C	8.	8.
H2SO4 FOR COMP D	170.	170.
H2SO4 FOR COMP X	35.	35.
H2SO4 FOR A/S	6781.	6781.
RAW MATERIALS COST	17441.	17441.
SUB MATERIALS FOR COMPOUND	22431.	22431.
CHEMICALS & BAG	7392.	7392.
CATALYST & PACKING	1419.	1419.
ELECTRICITY	3602.	3602.
FUEL FOR EXISTING	797.	797.
UTILITIES COST	1419.	1419.
VARIABLE COST	50101.	50101.
DEPRECIATION (EXISTING)	475.	475.
DEPRECIATION (REHABILITAT'N)	1430.	1430.
DEPRECIATION (EXP.MACHINERY)	21108.	21108.
DEPRECIATION (EXP.BUILDING)	400.	400.
DEPRECIATION	23413.	23413.
AMORTIZATION	167.	167.
DEPRECIATION & AMORTIZATION	23579.	23579.
LABOUR COST	8269.	8269.
OVERHEAD	3265.	3265.
REPAIRS & MAINTENANCE	3575.	3575.
DIRECT FIXED COST	15109.	15109.
EX-FACTORY PRODUCTION COST	88789.	88789.
UNIT DIRECT OPERATING COST	0.6937	0.6937
ADMINISTRATIVE & SALES EXP	1459.	1459.
LOSS CARRY OVER (PAST YEARS)	0.	0.
ADMINISTRATIVE & SALES EXP	1459.	1459.
INTEREST ON EXIST'G LOAN	131.	65.
INTEREST ON ADDITIONAL LOAN	519.	311.
INTEREST ON EXPANSION LOAN	2711.	1355.
INTEREST ON LONG-TERM DEBT	3360.	1732.
INTEREST ON SHORT-TERM DEBT	0.	0.
TOTAL PRODUCTION COST	93608.	91980.
UNIT PRODUCTION COST	0.7313	0.7186

Table 9.8—12 *** ZAMBIA REHABILITATION PROJECT ***

IRR CALCULATION ON TOTAL INVESTMENT

- UNIT PRICE : 532K/T - (K'000)

YEAR	TOTAL INVESTMENT	PROFIT BEFORE TAX	DEPRECIATN	INTEREST ON L-T DEBT	RETURN BEFORE TAX	DISCOUNT FACTOR	(BEFORE TAX) PRESENT VALUE INVEST.	(BEFORE TAX) PRESENT VALUE RETURN	(LESS) INCOME TAX	RETURN AFTER TAX	DISCOUNT FACTOR	(AFTER TAX) PRESENT VALUE INVEST.	(AFTER TAX) PRESENT VALUE RETURN
1983	3373.	0.	0.	0.	0.	1.0000	3373.	0.	0.	0.	1.0000	3373.	0.
1984	13440.	0.	0.	0.	0.	0.7805	10490.	0.	0.	0.	0.8298	11153.	0.
1985	1771.	-4701.	798.	1037.	-2867.	0.6092	1079.	-1747.	0.	-2867.	0.6886	1220.	-1974.
1986	0.	2757.	1596.	1971.	6324.	0.4755	0.	3007.	0.	6324.	0.5714	0.	3614.
1987	0.	5975.	1596.	1764.	8934.	0.3711	0.	3316.	1815.	7120.	0.4741	0.	3376.
1988	0.	6048.	1596.	1556.	9201.	0.2897	0.	2665.	3024.	6176.	0.3934	0.	2430.
1989	0.	6256.	1596.	1349.	9201.	0.2261	0.	2080.	3128.	6073.	0.3265	0.	1983.
1990	0.	6463.	1596.	1141.	9201.	0.1765	0.	1624.	3232.	5969.	0.2709	0.	1617.
1991	0.	6671.	1596.	934.	9201.	0.1377	0.	1267.	3335.	5865.	0.2248	0.	1319.
1992	0.	6878.	1596.	726.	9201.	0.1075	0.	989.	3439.	5761.	0.1865	0.	1075.
1993	0.	7086.	1596.	519.	9201.	0.0839	0.	772.	3543.	5658.	0.1548	0.	876.
1994	-5586.	7293.	1596.	311.	9201.	0.0655	-366.	603.	3647.	5554.	0.1285	-718.	713.
TOTAL	12998.				76796.		14576.	14576.		51634.		15027.	15027.

***** INTERNAL RATE OF RETURN ***** 28.12 PER CENT (BEFORE TAX) 20.51 PER CENT (AFTER TAX)

***** PAY-OUT PERIOD ***** 3.91 YEAR (BEFORE TAX) 4.66 YEAR (AFTER TAX)

(THE YEAR WHEN THE TOTAL CAPITAL COST WILL BE PAID OUT BY ACCUMULATED TOTAL RETURN, FROM THE BEG. OF OPERATION)

CAPITAL REQUIREMENTS	
LAND AND SITE IMPROVEMENT	0.
CONSTRUCTED FACILITIES	18584.
PRE-INVEST AND START-UP EXP	0.
INTEREST DURING CONSTRUCTION	2165.
TOTAL FIXED CAPITAL	20749.
INITIAL WORKING CAPITAL	0.
TOTAL CAPITAL COST	20749.

SOURCE OF FUNDS	
PAID-UP SHARE CAPITAL	0.
LONG TERM DEBT	20749.
SHORT TERM DEBT	0.
FINANCIAL RESOURCES	20749.

Table 9.8-13 *** ZAMBIA REHABILITATION PROJECT ***

IRR CALCULATION ON TOTAL INVESTMENT

- UNIT PRICE : 550K/T -

(K'000)

YEAR	TOTAL INVESTMENT	PROFIT BEFORE TAX	DEPRECIATIN	INTEREST ON L-T DEBT	RETURN BEFORE TAX	DISCOUNT FACTOR	(BEFORE TAX) PRESENT VALUE INVEST.	(BEFORE TAX) PRESENT VALUE RETURN	(LESS) INCOME TAX	RETURN AFTER TAX	DISCOUNT FACTOR	(AFTER TAX) PRESENT VALUE INVEST.	(AFTER TAX) PRESENT VALUE RETURN
1983	3373.	0.	0.	0.	0.	1.0000	3373.	0.	0.	0.	1.0000	3373.	0.
1984	13440.	0.	0.	0.	0.	0.7680	10321.	0.	0.	0.	0.8206	11029.	0.
1985	1771.	-4835.	798.	1037.	-3000.	0.5897	1044.	-1769.	0.	-3000.	0.6734	1193.	-2020.
1986	0.	3391.	1596.	1971.	6959.	0.4529	0.	3152.	0.	6959.	0.5526	0.	3846.
1987	0.	6386.	1596.	1764.	9746.	0.3478	0.	3390.	2471.	7275.	0.4535	0.	3299.
1988	0.	6810.	1596.	1556.	9962.	0.2671	0.	2661.	3405.	6557.	0.3722	0.	2440.
1989	0.	7017.	1596.	1349.	9962.	0.2051	0.	2043.	3509.	6453.	0.3054	0.	1971.
1990	0.	7225.	1596.	1141.	9962.	0.1575	0.	1569.	3612.	6350.	0.2506	0.	1591.
1991	0.	7432.	1596.	934.	9962.	0.1210	0.	1205.	3716.	6246.	0.2057	0.	1285.
1992	0.	7640.	1596.	726.	9962.	0.0929	0.	925.	3820.	6142.	0.1688	0.	1037.
1993	0.	7847.	1596.	519.	9962.	0.0713	0.	711.	3924.	6039.	0.1385	0.	836.
1994	-5586.	8055.	1596.	311.	9962.	0.0548	-306.	546.	4027.	5935.	0.1137	-635.	675.
TOTAL	12998.				83440.		14433.	14433.		54956.		14960.	14960.

***** INTERNAL RATE OF RETURN ***** 30.22 PER CENT (BEFORE TAX) 21.86 PER CENT (AFTER TAX)

***** PAY-OUT PERIOD ***** 3.71 YEAR (BEFORE TAX) 4.46 YEAR (AFTER TAX)

(THE YEAR WHEN THE TOTAL CAPITAL COST WILL BE PAID OUT BY ACCUMULATED TOTAL RETURN, FROM THE BEG. OF OPERATION)

CAPITAL REQUIREMENTS

LAND AND SITE IMPROVEMENT	0.
CONSTRUCTED FACILITIES	18584.
PRE-INVEST AND START-UP EXP	0.
INTEREST DURING CONSTRUCTION	2165.
TOTAL FIXED CAPITAL	20749.
INITIAL WORKING CAPITAL	0.
TOTAL CAPITAL COST	20749.

SOURCE OF FUNDS

PAID-UP SHARE CAPITAL	0.
LONG TERM DEBT	20749.
SHORT TERM DEBT	0.
FINANCIAL RESOURCES	20749.

Table 9.8—14 *** ZAMBIA REHABILITATION PROJECT ***
IRR CALCULATION ON TOTAL INVESTMENT
- UNIT PRICE : 580K/T - (K'000)

YEAR	TOTAL INVESTMENT	PROFIT BEFORE TAX	DEPRECIATN	INTEREST ON L-T DEBT	RETURN BEFORE TAX	DISCOUNT FACTOR	(BEFORE TAX) PRESENT VALUE INVEST.	(BEFORE TAX) PRESENT VALUE RETURN	(LESS) INCOME TAX	RETURN AFTER TAX	DISCOUNT FACTOR	(AFTER TAX) PRESENT VALUE INVEST.	(AFTER TAX) PRESENT VALUE RETURN
1983	3373.	0.	0.	0.	0.	1.0000	3373.	0.	0.	0.	1.0000	3373.	0.
1984	13440.	0.	0.	0.	0.	0.7567	10170.	0.	0.	0.	0.8122	10917.	0.
1985	1771.	-4963.	798.	1037.	-3127.	0.5726	1014.	-1791.	0.	-3127.	0.6537	1168.	-2063.
1986	0.	4801.	1596.	1971.	7568.	0.4333	0.	3279.	0.	7568.	0.5359	0.	4056.
1987	0.	7167.	1596.	1764.	10526.	0.3279	0.	3451.	3103.	7424.	0.4353	0.	3231.
1988	0.	7542.	1596.	1556.	10694.	0.2481	0.	2653.	3771.	6923.	0.3535	0.	2448.
1989	0.	7750.	1596.	1349.	10694.	0.1877	0.	2008.	3875.	6820.	0.2872	0.	1958.
1990	0.	7957.	1596.	1141.	10694.	0.1421	0.	1519.	3979.	6716.	0.2332	0.	1566.
1991	0.	8165.	1596.	934.	10694.	0.1075	0.	1150.	4082.	6612.	0.1895	0.	1253.
1992	0.	8372.	1596.	726.	10694.	0.0814	0.	870.	4186.	6508.	0.1539	0.	1002.
1993	0.	8580.	1596.	519.	10694.	0.0616	0.	658.	4290.	6405.	0.1250	0.	801.
1994	-5586.	8787.	1596.	311.	10694.	0.0466	-260.	498.	4394.	6301.	0.1015	-567.	640.
TOTAL	12998.				89829.		14297.	14297.		58150.		14891.	14891.

***** INTERNAL RATE OF RETURN ***** 32.15 PER CENT (BEFORE TAX) 23.12 PER CENT (AFTER TAX)

***** PAY-OUT PERIOD ***** 3.54 YEAR (BEFORE TAX) 4.29 YEAR (AFTER TAX)
(THE YEAR WHEN THE TOTAL CAPITAL COST WILL BE PAID OUT BY ACCUMULATED TOTAL RETURN, FROM THE BEG. OF OPERATION)

CAPITAL REQUIREMENTS	
LAND AND SITE IMPROVEMENT	0.
CONSTRUCTED FACILITIES	18584.
PRE-INVEST AND START-UP EXP	0.
INTEREST DURING CONSTRUCTION	2165.
TOTAL FIXED CAPITAL	20749.
INITIAL WORKING CAPITAL	0.
TOTAL CAPITAL COST	20749.

SOURCE OF FUNDS	
PAID-UP SHARE CAPITAL	0.
LONG TERM DEBT	20749.
SHORT TERM DEBT	0.
FINANCIAL RESOURCES	20749.

Table 9.8—15(1) *** ZAMBIA REHABILITATION PROJECT ***
INCOME STATEMENTS (FOR YEARS ENDING MARCH 31)
- UNIT PRICE : 532K/T - (K'000)

	1982	1983	1984	1985	1986	1987	1988	1989	1990	1991	1992
SALES REVENUE	22174.	20227.	20227.	15960.	31920.	31920.	31920.	31920.	31920.	31920.	31920.
COST OF SALES	16468.	16509.	16509.	16701.	24561.	24561.	24561.	24561.	24561.	24561.	24561.
VARIABLE COST	7492.	7092.	7092.	7714.	13989.	13989.	13989.	13989.	13989.	13989.	13989.
DEPRECIATION & AMORTIZATION	475.	475.	475.	1273.	2071.	2071.	2071.	2071.	2071.	2071.	2071.
OTHER FIXED COST	8501.	8942.	8942.	7714.	8501.	8501.	8501.	8501.	8501.	8501.	8501.
(INC) IN PRODUCT INVENTORIES	0.	0.	0.	0.	0.	0.	0.	0.	0.	0.	0.
GROSS PROFIT OR (LOSS) ON SALES	5706.	3718.	3718.	-741.	7359.	7359.	7359.	7359.	7359.	7359.	7359.
LESS. SALES EXPENSES	1253.	1253.	1253.	1253.	1253.	1253.	1253.	1253.	1253.	1253.	1253.
OPERATING PROFIT OR (LOSS)	-5547.	2465.	2465.	-1994.	6106.	6106.	6106.	6106.	6106.	6106.	6106.
LESS. INTEREST											
ON LONG TERM DEBT	850.	785.	719.	1691.	2560.	2287.	2014.	1741.	1468.	1195.	922.
ON SHORT TERM DEBT	0.	0.	0.	0.	0.	0.	0.	0.	0.	0.	0.
NET PROFIT OR (LOSS) BEFORE TAX	-6397.	1680.	1745.	-3686.	3546.	3819.	4092.	4365.	4638.	4911.	5183.
LESS. INCOME TAX	0.	0.	0.	0.	0.	354.	2046.	2182.	2319.	2455.	2592.
NET PROFIT OR (LOSS) AFTER TAX	-6397.	1680.	1745.	-3686.	3546.	3465.	2046.	2182.	2319.	2455.	2592.

Table 9.8-15(2) *** ZAMBIA REHABILITATION PROJECT ***
INCOME STATEMENTS (FOR YEARS ENDING MARCH 31)
- UNIT PRICE : 532K/T - (K'000)

	1993	1994
SALES REVENUE	31920.	31920.
COST OF SALES	24561.	24561.
VARIABLE COST	13989.	13989.
DEPRECIATION & AMORTIZATION	2071.	2071.
OTHER FIXED COST	8501.	8501.
(INC) IN PRODUCT INVENTORIES	0.	0.
GROSS PROFIT OR (LOSS) ON SALES	7359.	7359.
LESS. SALES EXPENSES	1253.	1253.
OPERATING PROFIT OR (LOSS)	6106.	6106.
LESS. INTEREST		
ON LONG TERM DEBT	649.	377.
ON SHORT TERM DEBT	0.	0.
NET PROFIT OR (LOSS) BEFORE TAX	5456.	5729.
LESS. INCOME TAX	2728.	2865.
NET PROFIT OR (LOSS) AFTER TAX	2728.	2865.

Table 9.8-16(1) *** ZAMBIA REHABILITATION PROJECT ***
FUNDS FLOW STATEMENTS (FOR YEARS ENDING MARCH 31)
- UNIT PRICE : 532K/T - (K'000)

	1981	1982	1983	1984	1985	1986	1987	1988	1989	1990	1991
SOURCES OF FUNDS	22880.	-1287.	17014.	5830.	-721.	8177.	8177.	8177.	8177.	8177.	8177.
CASH GENERATED FROM OPERATION	0.	-5072.	2940.	2940.	-721.	8177.	8177.	8177.	8177.	8177.	8177.
PROFIT BEFORE TAX, INTEREST	0.	-5547.	2465.	2465.	-1994.	6106.	6106.	6106.	6106.	6106.	6106.
DEPRECIATION & AMORTIZATION	0.	475.	475.	475.	1273.	2071.	2071.	2071.	2071.	2071.	2071.
FINANCIAL RESOURCES	22880.	3785.	14074.	2890.	0.	0.	0.	0.	0.	0.	0.
SHARE CAPITAL	12880.	0.	0.	0.	0.	0.	0.	0.	0.	0.	0.
LONG TERM DEBT	10000.	3785.	14074.	2890.	0.	0.	0.	0.	0.	0.	0.
SHORT TERM DEBT	0.	0.	0.	0.	0.	0.	0.	0.	0.	0.	0.
INCREASE IN ACCT PAYABLE	0.	0.	0.	0.	0.	0.	0.	0.	0.	0.	0.
USES OF FUNDS	12880.	1619.	5337.	16563.	5389.	5404.	5131.	5212.	6631.	6495.	6358.
INVESTMENT IN FIXED ASSET	6180.	0.	3783.	15075.	1891.	0.	0.	0.	0.	0.	0.
LAND AND SITE IMPROVEMENT	0.	0.	0.	0.	0.	0.	0.	0.	0.	0.	0.
CONSTRUCTED FACILITIES	6180.	0.	3373.	13440.	1771.	0.	0.	0.	0.	0.	0.
PRE-INVEST. & START-UP EXP	0.	0.	0.	0.	0.	0.	0.	0.	0.	0.	0.
INTEREST DURING CONSTRUCTN	0.	0.	410.	1635.	120.	0.	0.	0.	0.	0.	0.
INCREASE IN CURRENT ASSET OTHER THAN CASH	6700.	0.	0.	0.	0.	0.	0.	0.	0.	0.	0.
INCR(DECR) ACC'T RECEIVABLE	0.	0.	0.	0.	0.	0.	0.	0.	0.	0.	0.
INCR(DECR) IN INVENTORIES											
PRODUCTS	0.	0.	0.	0.	0.	0.	0.	0.	0.	0.	0.
MATERIALS	6700.	0.	0.	0.	0.	0.	0.	0.	0.	0.	0.
DEBT SERVICES	0.	1619.	1554.	1488.	3498.	5404.	5131.	4858.	4585.	4312.	4039.
REPAYMENT OF LONG TERM DEBT	0.	769.	769.	769.	1807.	2844.	2844.	2844.	2844.	2844.	2844.
REPAYMENT OF SHORT TERM DEBT	0.	0.	0.	0.	0.	0.	0.	0.	0.	0.	0.
INTEREST ON LONG TERM DEBT	0.	850.	785.	719.	1691.	2560.	2287.	2014.	1741.	1468.	1195.
INTEREST ON SHORT TERM DEBT	0.	0.	0.	0.	0.	0.	0.	0.	0.	0.	0.
INCOME TAX PAYMENT	0.	0.	0.	0.	0.	0.	0.	354.	2046.	2182.	2319.
DIVIDENDS PAYMENT	0.	0.	0.	0.	0.	0.	0.	0.	0.	0.	0.
CASH INCREASE OR (DECREASE)	10000.	-2907.	11677.	-10733.	-6110.	2774.	3046.	2966.	1546.	1683.	1819.
BEGINNING CASH BALANCE	0.	10000.	7093.	18770.	8037.	1927.	4701.	7747.	10713.	12259.	13942.
ENDING CASH BALANCE	10000.	7093.	18770.	8037.	1927.	4701.	7747.	10713.	12259.	13942.	15761.

Table 9.8-16(2) *** ZAMBIA REHABILITATION PROJECT ***
FUNDS FLOW STATEMENTS FOR YEARS ENDING MARCH 31)
- UNIT PRICE : 532K/T - (K'000)

	1992	1993	1994
SOURCES OF FUNDS	8177.	8177.	8177.
CASH GENERATED FROM OPERATION	8177.	8177.	8177.
PROFIT BEFORE TAX, INTEREST	6106.	6106.	6106.
DEPRECIATION & AMORTIZATION	2071.	2071.	2071.
FINANCIAL RESOURCES	0.	0.	0.
SHARE CAPITAL	0.	0.	0.
LONG TERM DEBT	0.	0.	0.
SHORT TERM DEBT	0.	0.	0.
INCREASE IN ACCT PAYABLE	0.	0.	0.
USES OF FUNDS	6222.	6085.	5949.
INVESTMENT IN FIXED ASSET	0.	0.	0.
LAND AND SITE IMPROVEMENT	0.	0.	0.
CONSTRUCTED FACILITIES	0.	0.	0.
PRE-INVEST. & START-UP EXP	0.	0.	0.
INTEREST DURING CONSTRUCTN	0.	0.	0.
INCREASE IN CURRENT ASSET OTHER THAN CASH	0.	0.	0.
INCREASE(DEC) ACC & RECEIVABLE	0.	0.	0.
INCREASE(DEC) IN INVENTORIES			
PRODUCTS	0.	0.	0.
MATERIALS	0.	0.	0.
DEBT SERVICES	3766.	3494.	3221.
REPAYMENT OF LONG TERM DEBT	2844.	2844.	2844.
REPAYMENT OF SHORT TERM DEBT	0.	0.	0.
INTEREST ON LONG TERM DEBT	922.	649.	377.
INTEREST ON SHORT TERM DEBT	0.	0.	0.
INCOME TAX PAYMENT	2455.	2592.	2728.
DIVIDENDS PAYMENT	0.	0.	0.
CASH INCREASE OR (DECREASE)	1955.	2092.	2228.
BEGINNING CASH BALANCE	15761.	17716.	19808.
ENDING CASH BALANCE	17716.	19808.	22036.

Table 9.8—17(1) *** ZAMBIA REHABILITATION PROJECT ***
BALANCE SHEET (FOR YEARS ENDING MARCH 31)
- UNIT PRICE : 532K/T - (K*000)

	1981	1982	1983	1984	1985	1986	1987	1988	1989	1990	1991
ASSETS	22880.	19498.	34483.	38349.	32857.	33559.	34534.	35428.	34903.	34514.	34261.
CURRENT ASSETS	16700.	13793.	25470.	14737.	8627.	11401.	14447.	17413.	18959.	20642.	22461.
CASH	10000.	7093.	18770.	8037.	1927.	4701.	7747.	10713.	12259.	13942.	15761.
ACCOUNTS RECEIVABLE	0.	0.	0.	0.	0.	0.	0.	0.	0.	0.	0.
INVENTORIES											
PRODUCTS	0.	0.	0.	0.	0.	0.	0.	0.	0.	0.	0.
MATERIALS	6700.	6700.	6700.	6700.	6700.	6700.	6700.	6700.	6700.	6700.	6700.
NET FIXED ASSETS	6180.	5705.	9012.	21612.	24229.	22158.	20087.	18015.	15944.	13872.	11801.
INVESTMENT	6180.	6180.	9963.	25038.	26929.	26929.	26929.	26929.	26929.	26929.	26929.
LAND & SITE IMPROVEMENT	0.	0.	0.	0.	0.	0.	0.	0.	0.	0.	0.
CONSTRUCTED FACILITIES	6180.	6180.	9553.	22993.	24764.	24764.	24764.	24764.	24764.	24764.	24764.
PRE-INVEST. & START-UP EXP	0.	0.	0.	0.	0.	0.	0.	0.	0.	0.	0.
INTEREST DURING CONSTRUCTN	0.	0.	410.	2045.	2165.	2165.	2165.	2165.	2165.	2165.	2165.
LESS-DEPRECIATN & AMORTIZTN	0.	475.	951.	1426.	2700.	4771.	6842.	8914.	10985.	13057.	15128.
LIABILITIES	10000.	13015.	26320.	28441.	26635.	23790.	21300.	20148.	17441.	14733.	12025.
CURRENT LIABILITIES	769.	769.	769.	1807.	2844.	2844.	3198.	4890.	5027.	5163.	5299.
ACCOUNTS PAYABLE	0.	0.	0.	0.	0.	0.	0.	0.	0.	0.	0.
INCOME TAX PAYABLE	0.	0.	0.	0.	0.	0.	354.	2046.	2182.	2319.	2455.
DIVIDENDS PAYABLE	0.	0.	0.	0.	0.	0.	0.	0.	0.	0.	0.
CURRENT PORTION OF DEBT											
LONG TERM DEBT	769.	769.	769.	1807.	2844.	2844.	2844.	2844.	2844.	2844.	2844.
SHORT TERM DEBT	0.	0.	0.	0.	0.	0.	0.	0.	0.	0.	0.
FIXED LIABILITIES	9231.	12246.	25551.	26635.	23790.	20946.	18102.	15258.	12414.	9570.	6726.
LONG TERM DEBT BALANCE	9231.	12246.	25551.	26635.	23790.	20946.	18102.	15258.	12414.	9570.	6726.
STOCK HOLDERS EQUITY	12880.	6483.	8162.	9908.	6222.	9768.	13234.	15280.	17462.	19781.	22236.
SHARE CAPITAL	12880.	12880.	12880.	12880.	12880.	12880.	12880.	12880.	12880.	12880.	12880.
RETAINED ERNINGS	0.	-6397.	-4718.	-2972.	-6658.	-3112.	354.	2400.	4582.	6901.	9356.

Table 9.8—17(2) *** ZAMBIA REHABILITATION PROJECT ***
BALANCE SHEET (FOR YEARS ENDING MARCH 31)
- UNIT PRICE : 532K/T - (K'000)

	1992	1993	1994
ASSETS	34145.	34166.	34323.
CURRENT ASSETS	24416.	26508.	28716.
CASH	17716.	19808.	22036.
ACCOUNTS RECEIVABLE	0.	0.	0.
INVENTORIES			
PRODUCTS	0.	0.	0.
MATERIALS	6700.	6700.	6700.
NET FIXED ASSETS	9729.	7658.	5586.
INVESTMENT	26929.	26929.	26929.
LAND & SITE IMPROVEMENT	0.	0.	0.
CONSTRUCTED FACILITIES	24764.	24764.	24764.
PRE-INVEST. & START-UP EXP	0.	0.	0.
INTEREST DURING CONSTRUCTN	2165.	2165.	2165.
LESS.DEPRECIATN & AMORTIZTN	17200.	19271.	21343.
LIABILITIES	9317.	6610.	3902.
CURRENT LIABILITIES	5436.	5572.	3902.
ACCOUNTS PAYABLE	0.	0.	0.
INCOME TAX PAYABLE	2592.	2728.	2865.
DIVIDENDS PAYABLE	0.	0.	0.
CURRENT PORTION OF DEBT			
LONG TERM DEBT	2844.	2844.	1037.
SHORT TERM DEBT	0.	0.	0.
FIXED LIABILITIES	3882.	1037.	-0.
LONG TERM DEBT BALANCE	3882.	1037.	-0.
STOCK HOLDERS EQUITY	24828.	27556.	30421.
SHARE CAPITAL	12880.	12880.	12880.
RETAINED EARNINGS	11948.	14676.	17541.

Table 9.8—18(1) *** ZAMBIA REHABILITATION PROJECT ***
INCOME STATEMENTS (FOR YEARS ENDING MARCH 31)
- UNIT PRICE : 558K/T - (K'000)

	1982	1983	1984	1985	1986	1987	1988	1989	1990	1991	1992
SALES REVENUE	23257.	21215.	21215.	16740.	33480.	33480.	33480.	33480.	33480.	33480.	33480.
COST OF SALES	16468.	16509.	16509.	16701.	24561.	24561.	24561.	24561.	24561.	24561.	24561.
VARIABLE COST	7492.	7092.	7092.	7714.	13989.	13989.	13989.	13989.	13989.	13989.	13989.
DEPRECIATION & AMORTIZATION	475.	475.	475.	1273.	2071.	2071.	2071.	2071.	2071.	2071.	2071.
OTHER FIXED COST	8501.	8942.	8942.	7714.	8501.	8501.	8501.	8501.	8501.	8501.	8501.
(INCT IN PRODUCT INVENTORIES	0.	0.	0.	0.	0.	0.	0.	0.	0.	0.	0.
GROSS PROFIT OR (LOSS) ON SALES	6789.	4706.	4706.	39.	8919.	8919.	8919.	8919.	8919.	8919.	8919.
LESS. SALES EXPENSES	11253.	1253.	1253.	1253.	1253.	1253.	1253.	1253.	1253.	1253.	1253.
OPERATING PROFIT OR (LOSS)	-4464.	3453.	3453.	-1214.	7666.	7666.	7666.	7666.	7666.	7666.	7666.
LESS. INTEREST											
ON LONG TERM DEBT	850.	785.	719.	1691.	2560.	2287.	2014.	1741.	1468.	1195.	922.
ON SHORT TERM DEBT	0.	0.	0.	0.	0.	0.	0.	0.	0.	0.	0.
NET PROFIT OR (LOSS) BEFORE TAX	-5314.	2668.	2734.	-2906.	5106.	5379.	5652.	5925.	6198.	6471.	6743.
LESS. INCOME TAX	0.	0.	44.	0.	1100.	2690.	2826.	2962.	3099.	3235.	3372.
NET PROFIT OR (LOSS) AFTER TAX	-5314.	2668.	2690.	-2906.	4006.	2690.	2826.	2962.	3099.	3235.	3372.

Table 9.8-18(2) *** ZAMBIA REHABILITATION PROJECT ***
INCOME STATEMENTS (FOR YEARS ENDING MARCH 31)
- UNIT PRICE : 558K/T - (K'000)

	1993	1994
SALES REVENUE	33480.	33480.
COST OF SALES	24561.	24561.
VARIABLE COST	13989.	13989.
DEPRECIATION & AMORTIZATION	2071.	2071.
OTHER FIXED COST	8501.	8501.
(INC) IN PRODUCT INVENTORIES	0.	0.
GROSS PROFIT OR (LOSS) ON SALES	8919.	8919.
LESS. SALES EXPENSES	1253.	1253.
OPERATING PROFIT OR (LOSS)	7666.	7666.
LESS. INTEREST		
ON LONG TERM DEBT	649.	377.
ON SHORT TERM DEBT	0.	0.
NET PROFIT OR (LOSS) BEFORE TAX	7016.	7289.
LESS. INCOME TAX	3508.	3645.
NET PROFIT OR (LOSS) AFTER TAX	3508.	3645.

Table 9.8—19(1) *** ZAMBIA REHABILITATION PROJECT ***
FUNDS FLOW STATEMENTS (FOR YEARS ENDING MARCH 31)
- UNIT PRICE : 550K/T - (K'000)

	1981	1982	1983	1984	1985	1986	1987	1988	1989	1990	1991
SOURCES OF FUNDS	22880.	-204.	18002.	6819.	59.	9737.	9737.	9737.	9737.	9737.	9737.
CASH GENERATED FROM OPERATION	0.	-3988.	3928.	3928.	59.	9737.	9737.	9737.	9737.	9737.	9737.
PROFIT BEFORE TAX, INTEREST	0.	-4464.	3453.	3453.	-1214.	7666.	7666.	7666.	7666.	7666.	7666.
DEPRECIATION & AMORTIZATION	0.	475.	475.	475.	1273.	2071.	2071.	2071.	2071.	2071.	2071.
FINANCIAL RESOURCES	22880.	3785.	14074.	2890.	0.	0.	0.	0.	0.	0.	0.
SHARE CAPITAL	12880.	0.	0.	0.	0.	0.	0.	0.	0.	0.	0.
LONG TERM DEBT	10000.	3785.	14074.	2890.	0.	0.	0.	0.	0.	0.	0.
SHORT TERM DEBT	0.	0.	0.	0.	0.	0.	0.	0.	0.	0.	0.
INCREASE IN ACCT PAYABLE	0.	0.	0.	0.	0.	0.	0.	0.	0.	0.	0.
USES OF FUNDS	12880.	1619.	5337.	16563.	5433.	5404.	6231.	7548.	7411.	7275.	7138.
INVESTMENT IN FIXED ASSET	6180.	0.	3783.	15075.	1891.	0.	0.	0.	0.	0.	0.
LAND AND SITE IMPROVEMENT	0.	0.	0.	0.	0.	0.	0.	0.	0.	0.	0.
CONSTRUCTED FACILITIES	6180.	0.	3373.	13440.	1771.	0.	0.	0.	0.	0.	0.
PRE-INVEST. & START-UP EXP	0.	0.	0.	0.	0.	0.	0.	0.	0.	0.	0.
INTEREST DURING CONSTRUCTIN	0.	0.	410.	1635.	120.	0.	0.	0.	0.	0.	0.
INCREASE IN CURRENT ASSET OTHER THAN CASH	6700.	0.	0.	0.	0.	0.	0.	0.	0.	0.	0.
INCREDECR) ACC T RECEIVABLE	0.	0.	0.	0.	0.	0.	0.	0.	0.	0.	0.
INCREDECR) IN INVENTORIES											
PRODUCTS	0.	0.	0.	0.	0.	0.	0.	0.	0.	0.	0.
MATERIALS	6700.	0.	0.	0.	0.	0.	0.	0.	0.	0.	0.
DEBT SERVICES	0.	1619.	1554.	1488.	3498.	5404.	5131.	4858.	4585.	4312.	4039.
REPAYMENT OF LONG TERM DEBT	0.	769.	769.	769.	1807.	2844.	2844.	2844.	2844.	2844.	2844.
REPAYMNT OF SHORT TERM DEBT	0.	0.	0.	0.	0.	0.	0.	0.	0.	0.	0.
INTEREST ON LONG TERM DEBT	0.	850.	785.	719.	1691.	2560.	2287.	2014.	1741.	1468.	1195.
INTEREST ON SHORT TERM DEBT	0.	0.	0.	0.	0.	0.	0.	0.	0.	0.	0.
INCOME TAX PAYMENT	0.	0.	0.	0.	44.	0.	1100.	2690.	2826.	2962.	3099.
DIVIDENDS PAYMENT	0.	0.	0.	0.	0.	0.	0.	0.	0.	0.	0.
CASH INCREASE OR (DECREASE)	10000.	-1823.	12666.	-9745.	-5374.	4334.	3506.	2190.	2326.	2463.	2599.
BEGINNING CASH BALANCE	0.	10000.	8177.	20843.	11098.	5724.	10057.	13563.	15753.	18079.	20542.
ENDING CASH BALANCE	10000.	8177.	20843.	11098.	5724.	10057.	13563.	15753.	18079.	20542.	23141.

Table 9.8--19(2) *** ZAMBIA REHABILITATION PROJECT ***
FUNDS FLOW STATEMENTS (FOR YEARS ENDING MARCH 31)
- UNIT PRICE : 550K/T - (K'000)

	1992	1993	1994
SOURCES OF FUNDS	9737.	9737.	9737.
CASH GENERATED FROM OPERATION	9737.	9737.	9737.
PROFIT BEFORE TAX, INTEREST	7666.	7666.	7666.
DEPRECIATION & AMORTIZATION	2071.	2071.	2071.
FINANCIAL RESOURCES	0.	0.	0.
SHARE CAPITAL	0.	0.	0.
LONG TERM DEBT	0.	0.	0.
SHORT TERM DEBT	0.	0.	0.
INCREASE IN ACCT PAYABLE	0.	0.	0.
USES OF FUNDS	7002.	6865.	6729.
INVESTMENT IN FIXED ASSET	0.	0.	0.
LAND AND SITE IMPROVEMENT	0.	0.	0.
CONSTRUCTION FACILITIES	0.	0.	0.
PRE-INVEST. & START-UP EXP	0.	0.	0.
INTEREST DURING CONSTRUCTION	0.	0.	0.
INCREASE IN CURRENT ASSET OTHER THAN CASH	0.	0.	0.
INCREDECRT ACC & RECEIVABLE	0.	0.	0.
INCREDECRT IN INVENTORIES			
PRODUCTS	0.	0.	0.
MATERIALS	0.	0.	0.
DEBT SERVICES	3766.	3494.	3221.
REPAYMENT OF LONG TERM DEBT	2844.	2844.	2844.
REPAYMENT OF SHORT TERM DEBT	0.	0.	0.
INTEREST ON LONG TERM DEBT	922.	649.	377.
INTEREST ON SHORT TERM DEBT	0.	0.	0.
INCOME TAX PAYMENT	3235.	3372.	3508.
DIVIDENDS PAYMENT	0.	0.	0.
CASH INCREASE OR (DECREASE)	2735.	2872.	3008.
BEGINNING CASH BALANCE	23141.	25876.	28748.
ENDING CASH BALANCE	25876.	28748.	31757.

Table 9.8--20(I) *** ZAMBIA REHABILITATION PROJECT ***
BALANCE SHEET (FOR YEARS ENDING MARCH 31)
- UNIT PRICE : 558K/T - (K'000)

	1981	1982	1983	1984	1985	1986	1987	1988	1989	1990	1991
ASSETS	22380.	20582.	36555.	41410.	36653.	38915.	40350.	40468.	40723.	41114.	41642.
CURRENT ASSETS	16700.	14877.	27543.	11798.	12424.	16757.	20263.	22453.	24779.	27242.	29841.
CASH	10000.	8177.	20843.	11098.	5724.	10057.	13563.	15753.	18079.	20542.	23141.
ACCOUNTS RECEIVABLE	0.	0.	0.	0.	0.	0.	0.	0.	0.	0.	0.
INVENTORIES											
PRODUCTS	0.	0.	0.	0.	0.	0.	0.	0.	0.	0.	0.
MATERIALS	6700.	6700.	6700.	6700.	6700.	6700.	6700.	6700.	6700.	6700.	6700.
NET FIXED ASSETS	6180.	5705.	9012.	23612.	24229.	22158.	20087.	18015.	15944.	13872.	11801.
INVESTMENT	6180.	6180.	9963.	25038.	26929.	26929.	26929.	26929.	26929.	26929.	26929.
LAND & SITE IMPROVEMENT	0.	0.	0.	0.	0.	0.	0.	0.	0.	0.	0.
CONSTRUCTED FACILITIES	6180.	6180.	9553.	22993.	24764.	24764.	24764.	24764.	24764.	24764.	24764.
PRE-INVEST. & START-UP EXP	0.	0.	0.	0.	0.	0.	0.	0.	0.	0.	0.
INTEREST DURING CONSTRUCTN	0.	0.	410.	2045.	2165.	2165.	2165.	2165.	2165.	2165.	2165.
LESS.DEPRECIATN & AMORTIZTN	0.	475.	951.	1426.	2700.	4771.	6842.	8914.	10985.	13057.	15128.
LIABILITIES	10000.	13015.	26320.	26486.	26635.	24891.	23636.	20928.	18221.	15513.	12805.
CURRENT LIABILITIES	769.	769.	769.	1851.	2844.	3944.	5534.	5670.	5807.	5943.	6079.
ACCOUNTS PAYABLE	0.	0.	0.	0.	0.	0.	0.	0.	0.	0.	0.
INCOME TAX PAYABLE	0.	0.	0.	44.	0.	1100.	2690.	2826.	2962.	3099.	3235.
DIVIDENDS PAYABLE	0.	0.	0.	0.	0.	0.	0.	0.	0.	0.	0.
CURRENT PORTION OF DEBT											
LONG TERM DEBT	769.	769.	769.	1807.	2844.	2844.	2844.	2844.	2844.	2844.	2844.
SHORT TERM DEBT	0.	0.	0.	0.	0.	0.	0.	0.	0.	0.	0.
FIXED LIABILITIES	9231.	12246.	25551.	26635.	23790.	20946.	18102.	15258.	12414.	9570.	6726.
LONG TERM DEBT BALANCE	9231.	12246.	25551.	26635.	23790.	20946.	18102.	15258.	12414.	9570.	6726.
STOCK HOLDERS EQUITY	12380.	7566.	10235.	12924.	10019.	14025.	16714.	19540.	22502.	25601.	28837.
SHARE CAPITAL	12880.	12880.	12880.	12880.	12880.	12880.	12880.	12880.	12880.	12880.	12880.
RETAINED ERNINGS	0.	-5314.	-2645.	44.	-2861.	1145.	3834.	6660.	9622.	12721.	15957.

Table 9.8-20(2) *** ZAMBIA REHABILITATION PROJECT ***
BALANCE SHEET (FOR YEARS ENDING MARCH 31)
- UNIT PRICE : 558K/T - (K'000)

	1992	1993	1994
ASSETS	42306.	43106.	44043.
CURRENT ASSETS	32576.	35448.	38457.
CASH	25876.	28748.	31757.
ACCOUNTS RECEIVABLE	0.	0.	0.
INVENTORIES			
PRODUCTS	0.	0.	0.
MATERIALS	6700.	6700.	6700.
NET FIXED ASSETS	9729.	7658.	5586.
INVESTMENT	26929.	26929.	26929.
LAND & SITE IMPROVEMENT	0.	0.	0.
CONSTRUCTED FACILITIES	24764.	24764.	24764.
PRE-INVEST. & START-UP EXP	0.	0.	0.
INTEREST DURING CONSTRUCTN	2165.	2165.	2165.
LESS.DEPRECIATN & AMORTIZTN	17200.	19271.	21343.
LIABILITIES	10097.	7390.	4682.
CURRENT LIABILITIES	6216.	6352.	4682.
ACCOUNTS PAYABLE	0.	0.	0.
INCOME TAX PAYABLE	3372.	3500.	3645.
DIVIDENDS PAYABLE	0.	0.	0.
CURRENT PORTION OF DEBT			
LONG TERM DEBT	2844.	2844.	1037.
SHORT TERM DEBT	0.	0.	0.
FIXED LIABILITIES	3882.	1037.	-0.
LONG TERM DEBT BALANCE	3882.	1037.	-0.
STOCK HOLDERS EQUITY	32208.	35716.	39361.
SHARE CAPITAL	12880.	12880.	12880.
RETAINED EARNINGS	19328.	22836.	26481.

Table 9.8-21(1) *** ZAMBIA REHABILITATION PROJECT ***
INCOME STATEMENTS (FOR YEARS ENDING MARCH 31)
- UNIT PRICE : 580K/T - (K'000)

	1982	1983	1984	1985	1986	1987	1988	1989	1990	1991	1992
SALES REVENUE	24299.	22166.	22166.	17490.	34980.	34980.	34980.	34980.	34980.	34980.	34980.
COST OF SALES	16468.	16509.	16509.	16701.	24561.	24561.	24561.	24561.	24561.	24561.	24561.
VARIABLE COST	7492.	7092.	7092.	7714.	13989.	13989.	13989.	13989.	13989.	13989.	13989.
DEPRECIATION & AMORTIZATION	475.	475.	475.	1273.	2071.	2071.	2071.	2071.	2071.	2071.	2071.
OTHER FIXED COST	8501.	8942.	8942.	7714.	8501.	8501.	8501.	8501.	8501.	8501.	8501.
(INC) IN PRODUCT INVENTORIES	0.	0.	0.	0.	0.	0.	0.	0.	0.	0.	0.
GROSS PROFIT OR (LOSS) ON SALES	7831.	5657.	5657.	789.	10419.	10419.	10419.	10419.	10419.	10419.	10419.
LESS. SALES EXPENSES	1253.	1253.	1253.	1253.	1253.	1253.	1253.	1253.	1253.	1253.	1253.
OPERATING PROFIT OR (LOSS)	-3422.	4404.	4404.	-464.	9166.	9166.	9166.	9166.	9166.	9166.	9166.
LESS. INTEREST											
ON LONG TERM DEBT	850.	785.	719.	1691.	2560.	2287.	2014.	1741.	1468.	1195.	922.
ON SHORT TERM DEBT	0.	0.	0.	0.	0.	0.	0.	0.	0.	0.	0.
NET PROFIT OR (LOSS) BEFORE TAX	-4272.	3619.	3684.	-2156.	6606.	6879.	7152.	7425.	7698.	7971.	8243.
LESS. INCOME TAX	0.	0.	1516.	0.	2225.	3440.	3576.	3712.	3849.	3985.	4122.
NET PROFIT OR (LOSS) AFTER TAX	-4272.	3619.	2169.	-2156.	4381.	3440.	3576.	3712.	3849.	3985.	4122.

Table 9.8-21(2) *** ZAMBIA REHABILITATION PROJECT ***
INCOME STATEMENTS (FOR YEARS ENDING MARCH 31)
- UNIT PRICE : 503K/T - (K'000)

	1993	1994
SALES REVENUE	34980.	34980.
COST OF SALES	24561.	24561.
VARIABLE COST	13989.	13989.
DEPRECIATION & AMORTIZATION	2071.	2071.
OTHER FIXED COST	8501.	8501.
(INC) IN PRODUCT INVENTORIES	0.	0.
GROSS PROFIT OR (LOSS) ON SALES	10419.	10419.
LESS. SALES EXPENSES	1253.	1253.
OPERATING PROFIT OR (LOSS)	9166.	9166.
LESS. INTEREST		
ON LONG TERM DEBT	649.	377.
ON SHORT TERM DEBT	0.	0.
NET PROFIT OR (LOSS) BEFORE TAX	8516.	8789.
LESS. INCOME TAX	4258.	4395.
NET PROFIT OR (LOSS) AFTER TAX	4258.	4395.

Table 9.8—22(1) *** ZAMBIA REHABILITATION PROJECT ***
FUNDS FLOW STATEMENTS (FOR YEARS ENDING MARCH 31)
- UNIT PRICE : 583K/T - (K'000)

	1981	1982	1983	1984	1985	1986	1987	1988	1989	1990	1991
SOURCES OF FUNDS	22880.	838.	18953.	7769.	809.	11237.	11237.	11237.	11237.	11237.	11237.
CASH GENERATED FROM OPERATION	0.	-2946.	4879.	4879.	809.	11237.	11237.	11237.	11237.	11237.	11237.
PROFIT BEFORE TAX, INTEREST	0.	-3422.	4404.	4404.	-464.	9166.	9166.	9166.	9166.	9166.	9166.
DEPRECIATION & AMORTIZATION	0.	475.	475.	475.	1273.	2071.	2071.	2071.	2071.	2071.	2071.
FINANCIAL RESOURCES	22880.	3785.	14074.	2890.	0.	0.	0.	0.	0.	0.	0.
SHARE CAPITAL	12880.	0.	0.	0.	0.	0.	0.	0.	0.	0.	0.
LONG TERM DEBT	10000.	3785.	14074.	2890.	0.	0.	0.	0.	0.	0.	0.
SHORT TERM DEBT	0.	0.	0.	0.	0.	0.	0.	0.	0.	0.	0.
INCREASE IN ACCT PAYABLE	0.	0.	0.	0.	0.	0.	0.	0.	0.	0.	0.
USES OF FUNDS	12880.	1619.	5337.	16563.	6905.	5404.	7356.	8298.	8161.	8025.	7888.
INVESTMENT IN FIXED ASSET	6180.	0.	3783.	15075.	1891.	0.	0.	0.	0.	0.	0.
LAND AND SITE IMPROVEMENT	0.	0.	0.	0.	0.	0.	0.	0.	0.	0.	0.
CONSTRUCTED FACILITIES	6180.	0.	3373.	13440.	1771.	0.	0.	0.	0.	0.	0.
PRE-INVEST. & START-UP EXP	0.	0.	0.	0.	0.	0.	0.	0.	0.	0.	0.
INTEREST DURING CONSTRUCTN	0.	0.	410.	1635.	120.	0.	0.	0.	0.	0.	0.
INCREASE IN CURRENT ASSET OTHER THAN CASH	6700.	0.	0.	0.	0.	0.	0.	0.	0.	0.	0.
INCR(DECR) ACC T RECEIVABLE	0.	0.	0.	0.	0.	0.	0.	0.	0.	0.	0.
INCR(DECR) IN INVENTORIES											
PRODUCTS	0.	0.	0.	0.	0.	0.	0.	0.	0.	0.	0.
MATERIALS	6700.	0.	0.	0.	0.	0.	0.	0.	0.	0.	0.
DEBT SERVICES	0.	1619.	1554.	1488.	3498.	5404.	5131.	4858.	4585.	4312.	4039.
REPAYMENT OF LONG TERM DEBT	0.	769.	769.	769.	1807.	2844.	2844.	2844.	2844.	2844.	2844.
REPAYMNT OF SHORT TERM DEBT	0.	0.	0.	0.	0.	0.	0.	0.	0.	0.	0.
INTEREST ON LONG TERM DEBT	0.	850.	785.	719.	1691.	2560.	2287.	2014.	1741.	1468.	1195.
INTEREST ON SHORT TERM DEBT	0.	0.	0.	0.	0.	0.	0.	0.	0.	0.	0.
INCOME TAX PAYMENT	0.	0.	0.	0.	1516.	0.	2225.	3440.	3576.	3712.	3849.
DIVIDENDS PAYMENT	0.	0.	0.	0.	0.	0.	0.	0.	0.	0.	0.
CASH INCREASE OR (DECREASE)	10000.	-781.	13616.	-8794.	-6096.	5834.	3881.	2940.	3076.	3213.	3349.
BEGINNING CASH BALANCE	0.	10000.	9219.	22835.	14041.	7945.	13779.	17660.	20600.	23676.	26888.
ENDING CASH BALANCE	10000.	9219.	22835.	14041.	7945.	13779.	17660.	20600.	23676.	26888.	30237.

Table 9.8-22(2) *** ZAMBIA REHABILITATION PROJECT ***
FUNDS FLOW STATEMENTS (FOR YEARS ENDING MARCH 31)
- UNIT PRICE : SB3K/T - (K'000)

	1992	1993	1994
SOURCES OF FUNDS	11237.	11237.	11237.
CASH GENERATED FROM OPERATION	11237.	11237.	11237.
PROFIT BEFORE TAX, INTEREST	9166.	9166.	9166.
DEPRECIATION & AMORTIZATION	2071.	2071.	2071.
FINANCIAL RESOURCES	0.	0.	0.
SHARE CAPITAL	0.	0.	0.
LONG TERM DEBT	0.	0.	0.
SHORT TERM DEBT	0.	0.	0.
INCREASE IN ACCT PAYABLE	0.	0.	0.
USES OF FUNDS	7752.	7615.	7479.
INVESTMENT IN FIXED ASSET	0.	0.	0.
LAND AND SITE IMPROVEMENT	0.	0.	0.
CONSTRUCTED FACILITIES	0.	0.	0.
PRE-INVEST. & START-UP EXP	0.	0.	0.
INTEREST DURING CONSTRUCTN	0.	0.	0.
INCREASE IN CURRENT ASSET OTHER THAN CASH	0.	0.	0.
INCR(DECR) ACC T RECEIVABLE	0.	0.	0.
INCR(DECR) IN INVENTORIES			
PRODUCTS	0.	0.	0.
MATERIALS	0.	0.	0.
DEBT SERVICES	3766.	3494.	3221.
REPAYMENT OF LONG TERM DEBT	2844.	2844.	2844.
REPAYMNT OF SHORT TERM DEBT	0.	0.	0.
INTEREST ON LONG TERM DEBT	922.	649.	377.
INTEREST ON SHORT TERM DEBT	0.	0.	0.
INCOME TAX PAYMENT	3985.	4122.	4258.
DIVIDENDS PAYMENT	0.	0.	0.
CASH INCREASE OR (DECREASE)	3485.	3622.	3758.
BEGINNING CASH BALANCE	30237.	33723.	37345.
ENDING CASH BALANCE	33723.	37345.	41103.

Table 9.8—23(1) *** ZAMBIA REHABILITATION PROJECT ***
BALANCE SHEET (FOR YEARS ENDING MARCH 31)
- UNIT PRICE : 583K/T - (K'000)

	1981	1982	1983	1984	1985	1986	1987	1988	1989	1990	1991
ASSETS	22880.	21624.	38547.	44353.	38875.	42637.	44446.	45315.	46319.	47461.	48738.
CURRENT ASSETS	16700.	15919.	29535.	28741.	14645.	20479.	24360.	27300.	30376.	33588.	36937.
CASH	10000.	9219.	22835.	14041.	7945.	13779.	17660.	20600.	23676.	26888.	30237.
ACCOUNTS RECEIVABLE	0.	0.	0.	0.	0.	0.	0.	0.	0.	0.	0.
INVENTORIES											
PRODUCTS	0.	0.	0.	0.	0.	0.	0.	0.	0.	0.	0.
MATERIALS	6700.	6700.	6700.	6700.	6700.	6700.	6700.	6700.	6700.	6700.	6700.
NET FIXED ASSETS	6180.	5705.	9012.	23612.	24229.	22158.	20087.	18015.	15944.	13872.	11801.
INVESTMENT	6180.	6180.	9963.	25038.	26929.	26929.	26929.	26929.	26929.	26929.	26929.
LAND & SITE IMPROVEMENT	0.	0.	0.	0.	0.	0.	0.	0.	0.	0.	0.
CONSTRUCTED FACILITIES	6180.	6180.	9553.	22993.	24764.	24764.	24764.	24764.	24764.	24764.	24764.
PRE-INVEST. & START-UP EXP	0.	0.	0.	0.	0.	0.	0.	0.	0.	0.	0.
INTEREST DURING CONSTRUCTN	0.	0.	410.	2045.	2165.	2165.	2165.	2165.	2165.	2165.	2165.
LESS.DEPRECIATIN & AMORTIZTN	0.	475.	951.	1426.	2700.	4771.	6842.	8914.	10985.	13057.	15128.
LIABILITIES	10000.	13015.	26320.	29957.	26635.	26016.	24386.	21678.	18971.	16263.	13555.
CURRENT LIABILITIES	769.	769.	769.	3322.	2844.	5069.	6284.	6420.	6557.	6693.	6829.
ACCOUNTS PAYABLE	0.	0.	0.	0.	0.	0.	0.	0.	0.	0.	0.
INCOME TAX PAYABLE	0.	0.	0.	1516.	0.	2225.	3440.	3576.	3712.	3849.	3985.
DIVIDENDS PAYABLE	0.	0.	0.	0.	0.	0.	0.	0.	0.	0.	0.
CURRENT PORTION OF DEBT											
LONG TERM DEBT	769.	769.	769.	1807.	2844.	2844.	2844.	2844.	2844.	2844.	2844.
SHORT TERM DEBT	0.	0.	0.	0.	0.	0.	0.	0.	0.	0.	0.
FIXED LIABILITIES	9231.	12246.	25551.	26635.	23790.	20946.	18102.	15258.	12414.	9570.	6726.
LONG TERM DEBT BALANCE	9231.	12246.	25551.	26635.	23790.	20946.	18102.	15258.	12414.	9570.	6726.
STOCK HOLDERS EQUITY	12880.	8608.	12227.	14396.	12240.	16621.	20061.	23637.	27349.	31198.	35183.
SHARE CAPITAL	12880.	12880.	12880.	12880.	12900.	12880.	12880.	12880.	12880.	12880.	12880.
RETAINED EARNINGS	0.	-4272.	-653.	1516.	-640.	3741.	7181.	10757.	14469.	18318.	22303.

Table 9.8-23(2) *** ZAMBIA REHABILITATION PROJECT ***
BALANCE SHEET (FOR YEARS ENDING MARCH 31)
- UNIT PRICE : 583K/T - (K'000)

	1992	1993	1994
ASSETS	50152.	51703.	53389.
CURRENT ASSETS	40423.	44045.	47803.
CASH	33723.	37345.	41103.
ACCOUNTS RECEIVABLE	0.	0.	0.
INVENTORIES			
PRODUCTS	0.	0.	0.
MATERIALS	6700.	6700.	6700.
NET FIXED ASSETS	9729.	7658.	5586.
INVESTMENT	26929.	26929.	26929.
LAND & SITE IMPROVEMENT	0.	0.	0.
CONSTRUCTED FACILITIES	24764.	24764.	24764.
PRE-INVEST. & START-UP EXP	0.	0.	0.
INTEREST DURING CONSTRUCTN	2165.	2165.	2165.
LESS.DEPRECIATN & AMORTIZTN	17200.	19271.	21343.
LIABILITIES	10847.	8140.	5432.
CURRENT LIABILITIES	6966.	7102.	5432.
ACCOUNTS PAYABLE	0.	0.	0.
INCOME TAX PAYABLE	4122.	4258.	4395.
DIVIDENDS PAYABLE	0.	0.	0.
CURRENT PORTION OF DEBT			
LONG TERM DEBT	2844.	2844.	1037.
SHORT TERM DEBT	0.	0.	0.
FIXED LIABILITIES	3882.	1037.	-0.
LONG TERM DEBT BALANCE	3882.	1037.	-0.
STOCK HOLDERS EQUITY	39305.	43563.	47957.
SHARE CAPITAL	12880.	12880.	12880.
RETAINED ERNINGS	26425.	30683.	35077.

Table 9.8-24(1) *** ZAMBIA REHABILITATION PROJECT ***
INCOME STATEMENTS (FOR YEARS ENDING MARCH 31)
- SALES: 5% UP OF PRODUCTION COST - (K' 000)

	1982	1983	1984	1985	1986	1987	1988	1989	1990	1991	1992
SALES REVENUE	87267.	96927.	118467.	117526.	127474.	127474.	127474.	127474.	127474.	127474.	127474.
COST OF SALES	71151.	75953.	85980.	83818.	88789.	88789.	88789.	88789.	88789.	88789.	88789.
VARIABLE COST	38561.	42503.	48447.	46715.	50101.	50101.	50101.	50101.	50101.	50101.	50101.
DEPRECIATION & AMORTIZATION	21983.	21983.	21983.	22781.	23579.	23579.	23579.	23579.	23579.	23579.	23579.
OTHER FIXED COST	15109.	15550.	15550.	14322.	15109.	15109.	15109.	15109.	15109.	15109.	15109.
(INC) IN PRODUCT INVENTORIES	-4502.	-4083.	0.	0.	0.	0.	0.	0.	0.	0.	0.
GROSS PROFIT OR (LOSS) ON SALES	16115.	20975.	32487.	33708.	38684.	38684.	38684.	38684.	38684.	38684.	38684.
LESS. SALES EXPENSES	11459.	1459.	1459.	1459.	1459.	1459.	1459.	1459.	1459.	1459.	1459.
OPERATING PROFIT OR (LOSS)	4656.	19516.	31028.	32249.	37225.	37225.	37225.	37225.	37225.	37225.	37225.
LESS. INTEREST											
ON LONG TERM DEBT	18470.	17049.	15628.	15245.	14758.	13130.	11502.	9873.	8245.	6617.	4989.
ON SHORT TERM DEBT	0.	450.	0.	0.	0.	0.	0.	0.	0.	0.	0.
NET PROFIT OR (LOSS) BEFORE TAX	-13814.	2016.	15400.	17004.	22467.	24096.	25724.	27352.	28980.	30609.	32237.
LESS. INCOME TAX	0.	0.	0.	0.	0.	12048.	12862.	13676.	14490.	15304.	16118.
NET PROFIT OR (LOSS) AFTER TAX	-13814.	2016.	15400.	17004.	22467.	12048.	12862.	13676.	14490.	15304.	16118.

Table 9.8-24(2) *** ZAMBIA REHABILITATION PROJECT ***
INCOME STATEMENTS (FOR YEARS ENDING MARCH 31)
- SALES: 5% UP OF PRODUCTION COST - (K' 000)

	1993	1994
SALES REVENUE	127474.	127474.
COST OF SALES	88789.	88789.
VARIABLE COST	50101.	50101.
DEPRECIATION & AMORTIZATION	23579.	23579.
OTHER FIXED COST	15109.	15109.
(INC) IN PRODUCT INVENTORIES	0.	0.
GROSS PROFIT OR (LOSS) ON SALES	38684.	38684.
LESS. SALES EXPENSES	1459.	1459.
OPERATING PROFIT OR (LOSS)	37225.	37225.
LESS. INTEREST		
ON LONG TERM DEBT	3360.	1732.
ON SHORT TERM DEBT	0.	0.
NET PROFIT OR (LOSS) BEFORE TAX	33865.	35493.
LESS. INCOME TAX	16933.	17747.
NET PROFIT OR (LOSS) AFTER TAX	16933.	17747.

Table 9.8-25(1) *** ZAMBIA REHABILITATION PROJECT ***
FUNDS FLOW STATEMENTS (FOR YEARS ENDING MARCH 31)
- SALES: 5% UP OF PRODUCTION COST - (K' 000)

	1981	1982	1983	1984	1985	1986	1987	1988	1989	1990	1991
SOURCES OF FUNDS	317280.	34927.	55573.	55902.	55030.	60805.	60805.	60805.	60805.	60805.	60805.
CASH GENERATED FROM OPERATION	0.	26640.	41499.	53011.	55030.	60805.	60805.	60805.	60805.	60805.	60805.
PROFIT BEFORE TAX, INTEREST	0.	4656.	19516.	31028.	32249.	37225.	37225.	37225.	37225.	37225.	37225.
DEPRECIATION & AMORTIZATION	0.	21983.	21983.	21983.	22781.	23579.	23579.	23579.	23579.	23579.	23579.
FINANCIAL RESOURCES	317280.	8287.	14074.	2890.	0.	0.	0.	0.	0.	0.	0.
SHARE CAPITAL	131080.	0.	0.	0.	0.	0.	0.	0.	0.	0.	0.
LONG TERM DEBT	186200.	3785.	14074.	2890.	0.	0.	0.	0.	0.	0.	0.
SHORT TERM DEBT	0.	4502.	0.	0.	0.	0.	0.	0.	0.	0.	0.
INCREASE IN ACCT PAYABLE	0.	0.	0.	0.	0.	0.	0.	0.	0.	0.	0.
USES OF FUNDS	307280.	37296.	44191.	45026.	32497.	31156.	29528.	39947.	39133.	38319.	37505.
INVESTMENT IN FIXED ASSET	300580.	0.	3783.	15075.	1891.	0.	0.	0.	0.	0.	0.
LAND AND SITE IMPROVEMENT	0.	0.	0.	0.	0.	0.	0.	0.	0.	0.	0.
CONSTRUCTED FACILITIES	300580.	0.	3373.	13440.	1771.	0.	0.	0.	0.	0.	0.
PRE-INVEST. & START-UP EXP	0.	0.	0.	0.	0.	0.	0.	0.	0.	0.	0.
INTEREST DURING CONSTRUCTN	0.	0.	410.	1635.	120.	0.	0.	0.	0.	0.	0.
INCREASE IN CURRENT ASSET OTHER THAN CASH	6700.	4502.	4083.	0.	0.	0.	0.	0.	0.	0.	0.
INCR(DECR) ACC T RECEIVABLE	0.	0.	0.	0.	0.	0.	0.	0.	0.	0.	0.
INCR(DECR) IN INVENTORIES											
PRODUCTS	0.	4502.	4083.	0.	0.	0.	0.	0.	0.	0.	0.
MATERIALS	6700.	0.	0.	0.	0.	0.	0.	0.	0.	0.	0.
DEBT SERVICES	0.	32793.	36325.	29952.	30606.	31156.	29528.	27900.	26271.	24643.	23015.
REPAYMENT OF LONG TERM DEBT	0.	14323.	14323.	14323.	15361.	16398.	16398.	16398.	16398.	16398.	16398.
REPAYMNT OF SHORT TERM DEBT	0.	0.	4502.	0.	0.	0.	0.	0.	0.	0.	0.
INTEREST ON LONG TERM DEBT	0.	18470.	17049.	15628.	15245.	14758.	13130.	11502.	9873.	8245.	6617.
INTEREST ON SHORT TERM DEBT	0.	0.	450.	0.	0.	0.	0.	0.	0.	0.	0.
INCOME TAX PAYMENT	0.	0.	0.	0.	0.	0.	0.	12048.	12862.	13676.	14490.
DIVIDENDS PAYMENT	0.	0.	0.	0.	0.	0.	0.	0.	0.	0.	0.
CASH INCREASE OR (DECREASE)	10000.	-2369.	11382.	10875.	22533.	29649.	31277.	20857.	21671.	22486.	23300.
BEGINNING CASH BALANCE	0.	10000.	7631.	19013.	29888.	52421.	82070.	113347.	134204.	155875.	178361.
ENDING CASH BALANCE	10000.	7631.	19013.	29888.	52421.	82070.	113347.	134204.	155875.	178361.	201660.

Table 9.8-25(2) *** ZAMBIA REHABILITATION PROJECT ***
FUNDS FLOW STATEMENTS (FOR YEARS ENDING MARCH 31)
- SALES: 5% UP OF PRODUCTION COST - (K' 000)

	1992	1993	1994
SOURCES OF FUNDS	60805.	60805.	60805.
CASH GENERATED FROM OPERATION	60805.	60805.	60805.
PROFIT BEFORE TAX, INTEREST	37225.	37225.	37225.
DEPRECIATION & AMORTIZATION	23579.	23579.	23579.
FINANCIAL RESOURCES	0.	0.	0.
SHARE CAPITAL	0.	0.	0.
LONG TERM DEBT	0.	0.	0.
SHORT TERM DEBT	0.	0.	0.
INCREASE IN ACCT PAYABLE	0.	0.	0.
USES OF FUNDS	36691.	35877.	35063.
INVESTMENT IN FIXED ASSET	0.	0.	0.
LAND AND SITE IMPROVEMENT	0.	0.	0.
CONSTRUCTED FACILITIES	0.	0.	0.
PRE-INVEST. & START-UP EXP	0.	0.	0.
INTEREST DURING CONSTRUCTN	0.	0.	0.
INCREASE IN CURRENT ASSET OTHER THAN CASH	0.	0.	0.
INCR(DECR) ACC T RECEIVABLE	0.	0.	0.
INCR(DECR) IN INVENTORIES			
PRODUCTS	0.	0.	0.
MATERIALS	0.	0.	0.
DEBT SERVICES	21386.	19758.	18130.
REPAYMENT OF LONG TERM DEBT	16398.	16398.	16398.
REPAYMNT OF SHORT TERM DEBT	0.	0.	0.
INTEREST ON LONG TERM DEBT	4989.	3360.	1732.
INTEREST ON SHORT TERM DEBT	0.	0.	0.
INCOME TAX PAYMENT	15304.	16118.	16933.
DIVIDENDS PAYMENT	0.	0.	0.
CASH INCREASE OR (DECREASE)	24114.	24928.	25742.
BEGINNING CASH BALANCE	201660.	225774.	250702.
ENDING CASH BALANCE	225774.	250702.	276444.

Table 9.8-26(1) *** ZAMBIA REHABILITATION PROJECT ***
BALANCE SHEET (FOR YEARS ENDING MARCH 31)
- SALES: 5% UP OF PRODUCTION COST - (K' 000)

	1981	1982	1983	1984	1985	1986	1987	1988	1989	1990	1991
ASSETS	317280.	297430.	294695.	298662.	300306.	306375.	314073.	311351.	309443.	308349.	308070.
CURRENT ASSETS	16700.	18834.	34298.	45174.	67707.	97356.	128632.	149490.	171161.	193647.	216946.
CASH	10000.	7631.	19013.	29888.	52421.	82070.	113347.	134204.	155875.	178361.	201660.
ACCOUNTS RECEIVABLE	0.	0.	0.	0.	0.	0.	0.	0.	0.	0.	0.
INVENTORIES											
PRODUCTS	0.	4502.	8586.	8586.	8586.	8586.	8586.	8586.	8586.	8586.	8586.
MATERIALS	6700.	6700.	6700.	6700.	6700.	6700.	6700.	6700.	6700.	6700.	6700.
NET FIXED ASSETS	300580.	278597.	260397.	253489.	232599.	209020.	185440.	161861.	138282.	114703.	91124.
INVESTMENT	300580.	300580.	304363.	319438.	321329.	321329.	321329.	321329.	321329.	321329.	321329.
LAND & SITE IMPROVEMENT	0.	0.	0.	0.	0.	0.	0.	0.	0.	0.	0.
CONSTRUCTED FACILITIES	300580.	300580.	303953.	317393.	319164.	319164.	319164.	319164.	319164.	319164.	319164.
PRE-INVEST. & START-UP EXP	0.	0.	0.	0.	0.	0.	0.	0.	0.	0.	0.
INTEREST DURING CONSTRUCTN	0.	0.	410.	2045.	2165.	2165.	2165.	2165.	2165.	2165.	2165.
LESS.DEPRECIATN & AMORTIZTN	0.	21983.	43966.	65949.	88730.	112309.	135889.	159468.	183047.	206626.	230205.
LIABILITIES	186200.	180164.	175413.	163980.	148619.	132221.	127871.	112287.	96703.	81120.	65536.
CURRENT LIABILITIES	14323.	18826.	14323.	15361.	16398.	16398.	28446.	29260.	30074.	30888.	31702.
ACCOUNTS PAYABLE	0.	0.	0.	0.	0.	0.	0.	0.	0.	0.	0.
INCOME TAX PAYABLE	0.	0.	0.	0.	0.	0.	12048.	12862.	13676.	14490.	15304.
DIVIDENDS PAYABLE	0.	0.	0.	0.	0.	0.	0.	0.	0.	0.	0.
CURRENT PORTION OF DEBT											
LONG TERM DEBT	14323.	14323.	14323.	15361.	16398.	16398.	16398.	16398.	16398.	16398.	16398.
SHORT TERM DEBT	0.	4502.	0.	0.	0.	0.	0.	0.	0.	0.	0.
FIXED LIABILITIES	171877.	161338.	161089.	148619.	132221.	115823.	99425.	83027.	66629.	50231.	33833.
LONG TERM DEBT BALANCE	171877.	161338.	161089.	148619.	132221.	115823.	99425.	83027.	66629.	50231.	33833.
STOCK HOLDERS EQUITY	131080.	117266.	119283.	134683.	151686.	174154.	186202.	199064.	212740.	227230.	242534.
SHARE CAPITAL	131080.	131080.	131080.	131080.	131080.	131080.	131080.	131080.	131080.	131080.	131080.
RETAINED ERNINGS	0.	-13814.	-11797.	3603.	20606.	43074.	55122.	67984.	81660.	96150.	111454.

Table 9.8-26(2) *** ZAMBIA REHABILITATION PROJECT ***
BALANCE SHEET (FOR YEARS ENDING MARCH 31)
- SALES: 5% UP OF PRODUCTION COST -

(K' 000)

	1992	1993	1994
ASSETS	308605.	309953.	312116.
CURRENT ASSETS	241060.	265988.	291730.
CASH	225774.	250702.	276444.
ACCOUNTS RECEIVABLE	0.	0.	0.
INVENTORIES			
PRODUCTS	8586.	8586.	8586.
MATERIALS	6700.	6700.	6700.
NET FIXED ASSETS	67545.	43965.	20386.
INVESTMENT	321329.	321329.	321329.
LAND & SITE IMPROVEMENT	0.	0.	0.
CONSTRUCTED FACILITIES	319164.	319164.	319164.
PRE-INVEST. & START-UP EXP	0.	0.	0.
INTEREST DURING CONSTRUCTN	2165.	2165.	2165.
LESS.DEPRECIATN & AMORTIZTN	253784.	277364.	300943.
LIABILITIES	49952.	34368.	18784.
CURRENT LIABILITIES	32516.	33331.	18784.
ACCOUNTS PAYABLE	0.	0.	0.
INCOME TAX PAYABLE	16118.	16933.	17747.
DIVIDENDS PAYABLE	0.	0.	0.
CURRENT PORTION OF DEBT			
LONG TERM DEBT	16398.	16398.	1037.
SHORT TERM DEBT	0.	0.	0.
FIXED LIABILITIES	17435.	1037.	-0.
LONG TERM DEBT BALANCE	17435.	1037.	-0.
STOCK HOLDERS EQUITY	258653.	275585.	293332.
SHARE CAPITAL	131080.	131080.	131080.
RETAINED ERNINGS	127573.	144505.	162252.

Table 9.8-27(1) *** ZAMBIA REHABILITATION PROJECT ***
INCOME STATEMENTS (FOR YEARS ENDING MARCH 31)
- SALES: 10% UP OF PRODUCTION COST - (K' 000)

	1982	1983	1984	1985	1986	1987	1988	1989	1990	1991	1992
SALES REVENUE	91491.	101617.	124193.	123206.	133640.	133640.	133640.	133640.	133640.	133640.	133640.
COST OF SALES	71151.	75953.	85980.	83818.	88789.	88789.	88789.	88789.	88789.	88789.	88789.
VARIABLE COST	38561.	42503.	48447.	46715.	50101.	50101.	50101.	50101.	50101.	50101.	50101.
DEPRECIATION & AMORTIZATION	21983.	21983.	21983.	22781.	23579.	23579.	23579.	23579.	23579.	23579.	23579.
OTHER FIXED COST	15109.	15550.	15550.	14322.	15109.	15109.	15109.	15109.	15109.	15109.	15109.
(INC) IN PRODUCT INVENTORIES	-4502.	-4083.	0.	0.	0.	0.	0.	0.	0.	0.	0.
GROSS PROFIT OR (LOSS) ON SALES	20340.	25664.	38213.	39388.	44851.	44851.	44851.	44851.	44851.	44851.	44851.
LESS. SALES EXPENSES	11459.	1459.	1459.	1459.	1459.	1459.	1459.	1459.	1459.	1459.	1459.
OPERATING PROFIT OR (LOSS)	8881.	24205.	36754.	37929.	43392.	43392.	43392.	43392.	43392.	43392.	43392.
LESS. INTEREST											
ON LONG TERM DEBT	18470.	17049.	15620.	15245.	14758.	13130.	11502.	9873.	8245.	6617.	4989.
ON SHORT TERM DEBT	0.	450.	0.	0.	0.	0.	0.	0.	0.	0.	0.
NET PROFIT OR (LOSS) BEFORE TAX	-9589.	6706.	21126.	22684.	28634.	30262.	31890.	33518.	35147.	36775.	38403.
LESS. INCOME TAX	0.	0.	0.	0.	0.	15131.	15945.	16759.	17573.	18387.	19202.
NET PROFIT OR (LOSS) AFTER TAX	-9589.	6706.	21126.	22684.	28634.	15131.	15945.	16759.	17573.	18387.	19202.

Table 9.8—27(2) *** ZAMBIA REHABILITATION PROJECT ***
INCOME STATEMENTS (FOR YEARS ENDING MARCH 31)
- SALES: 10% UP OF PRODUCTION COST - (K' 000)

	1993	1994
SALES REVENUE	133640.	133640.
COST OF SALES	88789.	88789.
VARIABLE COST	50101.	50101.
DEPRECIATION & AMORTIZATION	23579.	23579.
OTHER FIXED COST	15109.	15109.
(INC) IN PRODUCT INVENTORIES	0.	0.
GROSS PROFIT OR (LOSS) ON SALES	44851.	44851.
LESS. SALES EXPENSES	1459.	1459.
OPERATING PROFIT OR (LOSS)	43392.	43392.
LESS. INTEREST		
ON LONG TERM DEBT	3360.	1732.
ON SHORT TERM DEBT	0.	0.
NET PROFIT OR (LOSS) BEFORE TAX	40031.	41660.
LESS. INCOME TAX	20016.	20830.
NET PROFIT OR (LOSS) AFTER TAX	20016.	20830.

Table 9.8-28(1) *** ZAMBIA REHABILITATION PROJECT ***
FUNDS FLOW STATEMENTS (FOR YEARS ENDING MARCH 31)
- SALES: 10% UP OF PRODUCTION COST - (K' 000)

	1981	1982	1983	1984	1985	1986	1987	1988	1989	1990	1991
SOURCES OF FUNDS	317280.	39152.	60263.	61628.	60710.	66971.	66971.	66971.	66971.	66971.	66971.
CASH GENERATED FROM OPERATION	0.	30864.	46189.	58737.	60710.	66971.	66971.	66971.	66971.	66971.	66971.
PROFIT BEFORE TAX, INTEREST	0.	8881.	24205.	36754.	37929.	43392.	43392.	43392.	43392.	43392.	43392.
DEPRECIATION & AMORTIZATION	0.	21983.	21983.	21983.	22781.	23579.	23579.	23579.	23579.	23579.	23579.
FINANCIAL RESOURCES	317280.	8287.	14074.	2890.	0.	0.	0.	0.	0.	0.	0.
SHARE CAPITAL	131080.	0.	0.	0.	0.	0.	0.	0.	0.	0.	0.
LONG TERM DEBT	186200.	3785.	14074.	2890.	0.	0.	0.	0.	0.	0.	0.
SHORT TERM DEBT	0.	4502.	0.	0.	0.	0.	0.	0.	0.	0.	0.
INCREASE IN ACCT PAYABLE	0.	0.	0.	0.	0.	0.	0.	0.	0.	0.	0.
USES OF FUNDS	307280.	37296.	44191.	45026.	32497.	31156.	29528.	43030.	42216.	41402.	40588.
INVESTMENT IN FIXED ASSET	300580.	0.	3783.	15075.	1891.	0.	0.	0.	0.	0.	0.
LAND AND SITE IMPROVEMENT	0.	0.	0.	0.	0.	0.	0.	0.	0.	0.	0.
CONSTRUCTED FACILITIES	300580.	0.	3373.	13440.	1771.	0.	0.	0.	0.	0.	0.
PRE-INVEST. & START-UP EXP	0.	0.	0.	0.	0.	0.	0.	0.	0.	0.	0.
INTEREST DURING CONSTRUCTN	0.	0.	410.	1635.	120.	0.	0.	0.	0.	0.	0.
INCREASE IN CURRENT ASSET OTHER THAN CASH	6700.	4502.	4083.	0.	0.	0.	0.	0.	0.	0.	0.
INCR(DECR) ACC T RECEIVABLE	0.	0.	0.	0.	0.	0.	0.	0.	0.	0.	0.
INCR(DECR) IN INVENTORIES											
PRODUCTS	0.	4502.	4083.	0.	0.	0.	0.	0.	0.	0.	0.
MATERIALS	6700.	0.	0.	0.	0.	0.	0.	0.	0.	0.	0.
DEBT SERVICES	0.	32793.	36325.	29952.	30606.	31156.	29528.	27900.	26271.	24643.	23015.
REPAYMENT OF LONG TERM DEBT	0.	14323.	14323.	14323.	15361.	16398.	16398.	16398.	16398.	16398.	16398.
REPAYMNT OF SHORT TERM DEBT	0.	0.	4502.	0.	0.	0.	0.	0.	0.	0.	0.
INTEREST ON LONG TERM DEBT	0.	18470.	17049.	15628.	15245.	14758.	13130.	11502.	9873.	8245.	6617.
INTEREST ON SHORT TERM DEBT	0.	0.	450.	0.	0.	0.	0.	0.	0.	0.	0.
INCOME TAX PAYMENT	0.	0.	0.	0.	0.	0.	0.	15131.	15945.	16759.	17573.
DIVIDENDS PAYMENT	0.	0.	0.	0.	0.	0.	0.	0.	0.	0.	0.
CASH INCREASE OR (DECREASE)	10000.	1856.	16071.	16601.	28213.	35815.	37443.	23940.	24754.	25569.	26383.
BEGINNING CASH BALANCE	0.	10000.	11856.	27927.	44528.	72742.	108557.	146000.	169940.	194694.	220263.
ENDING CASH BALANCE	10000.	11856.	27927.	44528.	72742.	108557.	146000.	169940.	194694.	220263.	246646.

Table 9.8-28(2) *** ZAMBIA REHABILITATION PROJECT ***
FUNDS FLOW STATEMENTS (FOR YEARS ENDING MARCH 31)
- SALES: 10% UP OF PRODUCTION COST - (K' 000)

	1992	1993	1994
SOURCES OF FUNDS	66971.	66971.	66971.
CASH GENERATED FROM OPERATION	66971.	66971.	66971.
PROFIT BEFORE TAX, INTEREST	43392.	43392.	43392.
DEPRECIATION & AMORTIZATION	23579.	23579.	23579.
FINANCIAL RESOURCES	0.	0.	0.
SHARE CAPITAL	0.	0.	0.
LONG TERM DEBT	0.	0.	0.
SHORT TERM DEBT	0.	0.	0.
INCREASE IN ACCT PAYABLE	0.	0.	0.
USES OF FUNDS	39774.	38960.	38146.
INVESTMENT IN FIXED ASSET	0.	0.	0.
LAND AND SITE IMPROVEMENT	0.	0.	0.
CONSTRUCTED FACILITIES	0.	0.	0.
PRE-INVEST. & START-UP EXP	0.	0.	0.
INTEREST DURING CONSTRUCTN	0.	0.	0.
INCREASE IN CURRENT ASSET OTHER THAN CASH	0.	0.	0.
INCR(DECR) ACC T RECEIVABLE	0.	0.	0.
INCR(DECR) IN INVENTORIES			
PRODUCTS	0.	0.	0.
MATERIALS	0.	0.	0.
DEBT SERVICES	21386.	19750.	18130.
REPAYMENT OF LONG TERM DEBT	16398.	16398.	16398.
REPAYMNT OF SHORT TERM DEBT	0.	0.	0.
INTEREST ON LONG TERM DEBT	4989.	3360.	1732.
INTEREST ON SHORT TERM DEBT	0.	0.	0.
INCOME TAX PAYMENT	18387.	19202.	20016.
DIVIDENDS PAYMENT	0.	0.	0.
CASH INCREASE OR (DECREASE)	27197.	28011.	28825.
BEGINNING CASH BALANCE	246646.	273843.	301854.
ENDING CASH BALANCE	273843.	301854.	330679.

Table 9.8--29(1) *** ZAMBIA REHABILITATION PROJECT ***
BALANCE SHEET (FOR YEARS ENDING MARCH 31)
- SALES: 10% UP OF PRODUCTION COST -

(K' 000)

	1981	1982	1983	1984	1985	1986	1987	1988	1989	1990	1991
ASSETS	317280.	301655.	303610.	313303.	320626.	332862.	346726.	347087.	348262.	350252.	353055.
CURRENT ASSETS	16700.	23058.	43213.	59814.	88028.	123842.	161285.	185226.	209980.	235549.	261932.
CASH	10000.	11856.	27927.	44528.	72742.	108557.	146000.	169940.	194694.	220263.	246646.
ACCOUNTS RECEIVABLE	0.	0.	0.	0.	0.	0.	0.	0.	0.	0.	0.
INVENTORIES											
PRODUCTS	0.	4502.	8586.	8586.	8586.	8586.	8586.	8586.	8586.	8586.	8586.
MATERIALS	6700.	6700.	6700.	6700.	6700.	6700.	6700.	6700.	6700.	6700.	6700.
NET FIXED ASSETS	300580.	278597.	260397.	253489.	232599.	209020.	185440.	161861.	138282.	114703.	91124.
INVESTMENT	300580.	300580.	304363.	319438.	321329.	321329.	321329.	321329.	321329.	321329.	321329.
LAND & SITE IMPROVEMENT	0.	0.	0.	0.	0.	0.	0.	0.	0.	0.	0.
CONSTRUCTED FACILITIES	300580.	300580.	303953.	317393.	319164.	319164.	319164.	319164.	319164.	319164.	319164.
PRE-INVEST. & START-UP EXP	0.	0.	0.	0.	0.	0.	0.	0.	0.	0.	0.
INTEREST DURING CONSTRUCTN	0.	0.	410.	2045.	2165.	2165.	2165.	2165.	2165.	2165.	2165.
LESS.DEPRECIATN & AMORTIZTN	0.	21983.	43966.	65949.	88730.	112309.	135889.	159468.	183047.	206626.	230205.
LIABILITIES	186200.	180164.	175413.	163980.	148619.	132221.	130954.	115370.	99787.	84203.	68619.
CURRENT LIABILITIES	14323.	18826.	14323.	15361.	16398.	16398.	31529.	32343.	33157.	33971.	34785.
ACCOUNTS PAYABLE	0.	0.	0.	0.	0.	0.	0.	0.	0.	0.	0.
INCOME TAX PAYABLE	0.	0.	0.	0.	0.	0.	15131.	15945.	16759.	17573.	18387.
DIVIDENDS PAYABLE	0.	0.	0.	0.	0.	0.	0.	0.	0.	0.	0.
CURRENT PORTION OF DEBT											
LONG TERM DEBT	14323.	14323.	14323.	15361.	16398.	16398.	16398.	16398.	16398.	16398.	16398.
SHORT TERM DEBT	0.	4502.	0.	0.	0.	0.	0.	0.	0.	0.	0.
FIXED LIABILITIES	171877.	161338.	161089.	148619.	132221.	115823.	99425.	83027.	66629.	50231.	33833.
LONG TERM DEBT BALANCE	171877.	161338.	161089.	148619.	132221.	115823.	99425.	83027.	66629.	50231.	33833.
STOCK HOLDERS EQUITY	131080.	121491.	128197.	149323.	172007.	200641.	215772.	231717.	248476.	266049.	284436.
SHARE CAPITAL	131080.	131080.	131080.	131080.	131080.	131080.	131080.	131080.	131080.	131080.	131080.
RETAINED ERNINGS	0.	-9589.	-2883.	18243.	40927.	69561.	84692.	100637.	117396.	134969.	153356.

Table 9.8—29(2) *** ZAMBIA REHABILITATION PROJECT ***
BALANCE SHEET (FOR YEARS ENDING MARCH 31)
- SALES: 10% UP OF PRODUCTION COST - (K' 000)

	1992	1993	1994
ASSETS	356673.	361105.	366351.
CURRENT ASSETS	289128.	317139.	345965.
CASH	273843.	301854.	330679.
ACCOUNTS RECEIVABLE	0.	0.	0.
INVENTORIES			
PRODUCTS	8586.	8586.	8586.
MATERIALS	6700.	6700.	6700.
NET FIXED ASSETS	67545.	43965.	20386.
INVESTMENT	321329.	321329.	321329.
LAND & SITE IMPROVEMENT	0.	0.	0.
CONSTRUCTED FACILITIES	319164.	319164.	319164.
PRE-INVEST. & START-UP EXP	0.	0.	0.
INTEREST DURING CONSTRUCTN	2165.	2165.	2165.
LESS-DEPRECIATN & AMORTIZTN	253784.	277364.	300943.
LIABILITIES	53035.	37451.	21867.
CURRENT LIABILITIES	35600.	36414.	21867.
ACCOUNTS PAYABLE	0.	0.	0.
INCOME TAX PAYABLE	19202.	20016.	20830.
DIVIDENDS PAYABLE	0.	0.	0.
CURRENT PORTION OF DEBT			
LONG TERM DEBT	16398.	16398.	1037.
SHORT TERM DEBT	0.	0.	0.
FIXED LIABILITIES	17435.	1037.	-0.
LONG TERM DEBT BALANCE	17435.	1037.	-0.
STOCK HOLDERS EQUITY	303638.	323654.	344484.
SHARE CAPITAL	131080.	131080.	131080.
RETAINED ERNINGS	172558.	192574.	213404.

Table 9.8-30(1) *** ZAMBIA REHABILITATION PROJECT ***
INCOME STATEMENTS (FOR YEARS ENDING MARCH 31)
- SALES: 15% UP OF PRODUCTION COST - (K' 000)

	1982	1983	1984	1985	1986	1987	1988	1989	1990	1991	1992
SALES REVENUE	95596.	106176.	129767.	120736.	139637.	139637.	139637.	139637.	139637.	139637.	139637.
COST OF SALES	71151.	75953.	85980.	83818.	88789.	88789.	88789.	88789.	88789.	88789.	88789.
VARIABLE COST	38561.	42503.	48447.	46715.	50101.	50101.	50101.	50101.	50101.	50101.	50101.
DEPRECIATION & AMORTIZATION	21983.	21983.	21983.	22781.	23579.	23579.	23579.	23579.	23579.	23579.	23579.
OTHER FIXED COST	15109.	15550.	15550.	14322.	15109.	15109.	15109.	15109.	15109.	15109.	15109.
(INC) IN PRODUCT INVENTORIES	-4502.	-4083.	0.	0.	0.	0.	0.	0.	0.	0.	0.
GROSS PROFIT OR (LOSS) ON SALES	24445.	30224.	43787.	44918.	50848.	50848.	50848.	50848.	50848.	50848.	50848.
LESS. SALES EXPENSES	11459.	1459.	1459.	1459.	1459.	1459.	1459.	1459.	1459.	1459.	1459.
OPERATING PROFIT OR (LOSS)	12986.	28765.	42328.	43459.	49389.	49389.	49389.	49389.	49389.	49389.	49389.
LESS. INTEREST											
ON LONG TERM DEBT	18470.	17049.	15628.	15245.	14758.	13130.	11502.	9873.	8245.	6617.	4989.
ON SHORT TERM DEBT	0.	450.	0.	0.	0.	0.	0.	0.	0.	0.	0.
NET PROFIT OR (LOSS) BEFORE TAX	-5484.	11265.	26700.	28214.	34631.	36259.	37887.	39515.	41144.	42772.	44400.
LESS. INCOME TAX	0.	0.	0.	0.	0.	18129.	18944.	19758.	20572.	21386.	22200.
NET PROFIT OR (LOSS) AFTER TAX	-5484.	11265.	26700.	28214.	34631.	18129.	18944.	19758.	20572.	21386.	22200.

Table 9.8-30(2) *** ZAMBIA REHABILITATION PROJECT ***
INCOME STATEMENTS (FOR YEARS ENDING MARCH 31)
- SALES: 15% UP OF PRODUCTION COST - (K' 000)

	1993	1994
SALES REVENUE	139637.	139637.
COST OF SALES	88789.	88789.
VARIABLE COST	50101.	50101.
DEPRECIATION & AMORTIZATION	23579.	23579.
OTHER FIXED COST	15109.	15109.
(INC) IN PRODUCT INVENTORIES	0.	0.
GROSS PROFIT OR (LOSS) ON SALES	50848.	50848.
LESS. SALES EXPENSES	1459.	1459.
OPERATING PROFIT OR (LOSS)	49389.	49389.
LESS. INTEREST		
ON LONG TERM DEBT	3360.	1732.
ON SHORT TERM DEBT	0.	0.
NET PROFIT OR (LOSS) BEFORE TAX	46028.	47657.
LESS. INCOME TAX	23014.	23828.
NET PROFIT OR (LOSS) AFTER TAX	23014.	23828.

Table 9.8-31(1) *** ZAMBIA REHABILITATION PROJECT ***
FUNDS FLOW STATEMENTS (FOR YEARS ENDING MARCH 31)
- SALES: 15% UP OF PRODUCTION COST - (K' 000)

	1981	1982	1983	1984	1985	1986	1987	1988	1989	1990	1991
SOURCES OF FUNDS	317280.	43256.	64822.	67202.	66240.	72968.	72968.	72968.	72968.	72968.	72968.
CASH GENERATED FROM OPERATION	0.	34969.	50748.	64311.	66240.	72968.	72968.	72968.	72968.	72968.	72968.
PROFIT BEFORE TAX, INTEREST	0.	12986.	28765.	42328.	43459.	49389.	49389.	49389.	49389.	49389.	49389.
DEPRECIATION & AMORTIZATION	0.	21983.	21983.	21983.	22781.	23579.	23579.	23579.	23579.	23579.	23579.
FINANCIAL RESOURCES	317280.	8287.	14074.	2890.	0.	0.	0.	0.	0.	0.	0.
SHARE CAPITAL	131080.	0.	0.	0.	0.	0.	0.	0.	0.	0.	0.
LONG TERM DEBT	186200.	3785.	14074.	2890.	0.	0.	0.	0.	0.	0.	0.
SHORT TERM DEBT	0.	4502.	0.	0.	0.	0.	0.	0.	0.	0.	0.
INCREASE IN ACCT PAYABLE	0.	0.	0.	0.	0.	0.	0.	0.	0.	0.	0.
USES OF FUNDS	307280.	37296.	44191.	45026.	32497.	31156.	29528.	46029.	45215.	44401.	43587.
INVESTMENT IN FIXED ASSET	300580.	0.	3783.	15075.	1891.	0.	0.	0.	0.	0.	0.
LAND AND SITE IMPROVEMENT	0.	0.	0.	0.	0.	0.	0.	0.	0.	0.	0.
CONSTRUCTED FACILITIES	300580.	0.	3373.	13440.	1771.	0.	0.	0.	0.	0.	0.
PRE-INVEST. & START-UP EXP	0.	0.	0.	0.	0.	0.	0.	0.	0.	0.	0.
INTEREST DURING CONSTRUCTN	0.	0.	410.	1635.	120.	0.	0.	0.	0.	0.	0.
INCREASE IN CURRENT ASSET OTHER THAN CASH	6700.	4502.	4083.	0.	0.	0.	0.	0.	0.	0.	0.
INCR(DECR) ACC T RECEIVABLE	0.	0.	0.	0.	0.	0.	0.	0.	0.	0.	0.
INCR(DECR) IN INVENTORIES											
PRODUCTS	0.	4502.	4083.	0.	0.	0.	0.	0.	0.	0.	0.
MATERIALS	6700.	0.	0.	0.	0.	0.	0.	0.	0.	0.	0.
DEBT SERVICES	0.	32793.	36325.	29952.	30606.	31156.	29528.	27900.	26271.	24643.	23015.
REPAYMENT OF LONG TERM DEBT	0.	14323.	14323.	14323.	15361.	16398.	16398.	16398.	16398.	16398.	16398.
REPAYMNT OF SHORT TERM DEBT	0.	0.	4502.	0.	0.	0.	0.	0.	0.	0.	0.
INTEREST ON LONG TERM DEBT	0.	18470.	17049.	15628.	15245.	14758.	13130.	11502.	9873.	8245.	6617.
INTEREST ON SHORT TERM DEBT	0.	0.	450.	0.	0.	0.	0.	0.	0.	0.	0.
INCOME TAX PAYMENT	0.	0.	0.	0.	0.	0.	0.	18129.	18944.	19758.	20572.
DIVIDENDS PAYMENT	0.	0.	0.	0.	0.	0.	0.	0.	0.	0.	0.
CASH INCREASE OR (DECREASE)	10000.	5960.	20631.	22175.	33744.	41812.	43440.	26939.	27753.	28567.	29381.
BEGINNING CASH BALANCE	0.	10000.	15960.	36591.	58766.	92509.	134321.	177761.	204700.	232453.	261020.
ENDING CASH BALANCE	10000.	15960.	36591.	58766.	92509.	134321.	177761.	204700.	232453.	261020.	290401.

Table 9.8-31(2) *** ZAMBIA REHABILITATION PROJECT ***
FUNDS FLOW STATEMENTS (FOR YEARS ENDING MARCH 31)
- SALES: 15% UP OF PRODUCTION COST - (K' 000)

	1992	1993	1994
SOURCES OF FUNDS	72968.	72968.	72968.
CASH GENERATED FROM OPERATION	72960.	72968.	72968.
PROFIT BEFORE TAX, INTEREST	49389.	49389.	49389.
DEPRECIATION & AMORTIZATION	23579.	23579.	23579.
FINANCIAL RESOURCES	0.	0.	0.
SHARE CAPITAL	0.	0.	0.
LONG TERM DEBT	0.	0.	0.
SHORT TERM DEBT	0.	0.	0.
INCREASE IN ACCT PAYABLE	0.	0.	0.
USES OF FUNDS	42772.	41958.	41144.
INVESTMENT IN FIXED ASSET	0.	0.	0.
LAND AND SITE IMPROVEMENT	0.	0.	0.
CONSTRUCTED FACILITIES	0.	0.	0.
PRE-INVEST. & START-UP EXP	0.	0.	0.
INTEREST DURING CONSTRUCTN	0.	0.	0.
INCREASE IN CURRENT ASSET OTHER THAN CASH	0.	0.	0.
INCR(DECR) ACC T RECEIVABLE	0.	0.	0.
INCR(DECR) IN INVENTORIES			
PRODUCTS	0.	0.	0.
MATERIALS	0.	0.	0.
DEBT SERVICES	21306.	19758.	18130.
REPAYMENT OF LONG TERM DEBT	16398.	16398.	16398.
REPAYMNT OF SHORT TERM DEBT	0.	0.	0.
INTEREST ON LONG TERM DEBT	4989.	3360.	1732.
INTEREST ON SHORT TERM DEBT	0.	0.	0.
INCOME TAX PAYMENT	21386.	22200.	23014.
DIVIDENDS PAYMENT	0.	0.	0.
CASH INCREASE OR (DECREASE)	30195.	31009.	31824.
BEGINNING CASH BALANCE	290401.	320596.	351606.
ENDING CASH BALANCE	320596.	351606.	383430.

Table 9.8-32(1) *** ZAMBIA REHABILITATION PROJECT ***
BALANCE SHEET (FOR YEARS ENDING MARCH 31)
- SALES: 15% UP OF PRODUCTION COST - (K' 000)

	1981	1982	1983	1984	1985	1986	1987	1988	1989	1990	1991
ASSETS	317280.	305760.	312273.	327540.	340394.	358626.	378487.	381847.	386021.	391009.	396811.
CURRENT ASSETS	16700.	27163.	51876.	74052.	107795.	149607.	193047.	219986.	247739.	276306.	305687.
CASH	10000.	15960.	36591.	58706.	92509.	134321.	177761.	204700.	232453.	261020.	290401.
ACCOUNTS RECEIVABLE	0.	0.	0.	0.	0.	0.	0.	0.	0.	0.	0.
INVENTORIES											
PRODUCTS	0.	4502.	8586.	8586.	8586.	8586.	8586.	8586.	8586.	8586.	8586.
MATERIALS	6700.	6700.	6700.	6700.	6700.	6700.	6700.	6700.	6700.	6700.	6700.
NET FIXED ASSETS	300580.	278597.	260397.	253489.	232599.	209020.	185440.	161861.	138282.	114703.	91124.
INVESTMENT	300580.	300580.	304363.	319438.	321329.	321329.	321329.	321329.	321329.	321329.	321329.
LAND & SITE IMPROVEMENT	0.	0.	0.	0.	0.	0.	0.	0.	0.	0.	0.
CONSTRUCTED FACILITIES	300580.	300580.	303953.	317393.	319164.	319164.	319164.	319164.	319164.	319164.	319164.
PRE-INVEST. & START-UP EXP	0.	0.	0.	0.	0.	0.	0.	0.	0.	0.	0.
INTEREST DURING CONSTRUCTN	0.	0.	410.	2045.	2165.	2165.	2165.	2165.	2165.	2165.	2165.
LESS.DEPRECIATN & AMORTIZTN	0.	21983.	43966.	65949.	88730.	112309.	135889.	159468.	183047.	206626.	230205.
LIABILITIES	186200.	180164.	175413.	163980.	148619.	132221.	133953.	118369.	102785.	87201.	71617.
CURRENT LIABILITIES	14323.	18826.	14323.	15361.	16398.	16398.	34527.	35342.	36156.	36970.	37784.
ACCOUNTS PAYABLE	0.	0.	0.	0.	0.	0.	0.	0.	0.	0.	0.
INCOME TAX PAYABLE	0.	0.	0.	0.	0.	0.	18129.	18944.	19758.	20572.	21386.
DIVIDENDS PAYABLE	0.	0.	0.	0.	0.	0.	0.	0.	0.	0.	0.
CURRENT PORTION OF DEBT											
LONG TERM DEBT	14323.	14323.	14323.	15361.	16398.	16398.	16398.	16398.	16398.	16398.	16398.
SHORT TERM DEBT	0.	4502.	0.	0.	0.	0.	0.	0.	0.	0.	0.
FIXED LIABILITIES	171877.	161338.	161089.	148619.	132221.	115823.	99425.	83027.	66629.	50231.	33833.
LONG TERM DEBT BALANCE	171877.	161338.	161089.	148619.	132221.	115823.	99425.	83027.	66629.	50231.	33833.
STOCK HOLDERS EQUITY	131080.	125596.	136861.	163561.	191775.	226405.	244534.	263478.	283236.	303807.	325193.
SHARE CAPITAL	131080.	131080.	131080.	131080.	131080.	131080.	131080.	131080.	131080.	131080.	131080.
RETAINED ERNINGS	0.	-5484.	5781.	32481.	60695.	95325.	113454.	132398.	152156.	172727.	194113.

Table 9.8-32(2) *** ZAMBIA REHABILITATION PROJECT ***
BALANCE SHEET (FOR YEARS ENDING MARCH 31)
- SALES: 15% UP OF PRODUCTION COST - (K' 000)

	1992	1993	1994
ASSETS	403427.	410857.	419102.
CURRENT ASSETS	335082.	366092.	398715.
CASH	320596.	351606.	383430.
ACCOUNTS RECEIVABLE	0.	0.	0.
INVENTORIES			
PRODUCTS	8586.	8586.	8586.
MATERIALS	6700.	6700.	6700.
NET FIXED ASSETS	67545.	43965.	20386.
INVESTMENT	321329.	321329.	321329.
LAND & SITE IMPROVEMENT	0.	0.	0.
CONSTRUCTED FACILITIES	319164.	319164.	319164.
PRE-INVEST. & START-UP EXP	0.	0.	0.
INTEREST DURING CONSTRUCTN	2165.	2165.	2165.
LESS.DEPRECIATN & AMORTIZTN	253784.	277364.	300943.
LIABILITIES	56033.	40450.	24866.
CURRENT LIABILITIES	38598.	39412.	24866.
ACCOUNTS PAYABLE	0.	0.	0.
INCOME TAX PAYABLE	22200.	23014.	23828.
DIVIDENDS PAYABLE	0.	0.	0.
CURRENT PORTION OF DEBT			
LONG TERM DEBT	16398.	16398.	1037.
SHORT TERM DEBT	0.	0.	0.
FIXED LIABILITIES	17435.	1037.	-0.
LONG TERM DEBT BALANCE	17435.	1037.	-0.
STOCK HOLDERS EQUITY	347393.	370408.	394236.
SHARE CAPITAL	131080.	131080.	131080.
RETAINED ERNINGS	216313.	239328.	263156.

Table 9.8-33(1) *** ZAMBIA REHABILITATION PROJECT ***
INCOME STATEMENTS (FOR YEARS ENDING MARCH 31)
- INTEREST 7% - (K' 000)

	1982	1983	1984	1985	1986	1987	1988	1989	1990	1991	1992
SALES REVENUE	21132.	19276.	19276.	15210.	30420.	30420.	30420.	30420.	30420.	30420.	30420.
COST OF SALES	16468.	16509.	16509.	16676.	24512.	24512.	24512.	24512.	24512.	24512.	24512.
VARIABLE COST	7492.	7092.	7092.	7714.	13989.	13989.	13989.	13989.	13989.	13989.	13989.
DEPRECIATION & AMORTIZATION	475.	475.	475.	1249.	2022.	2022.	2022.	2022.	2022.	2022.	2022.
OTHER FIXED COST	8501.	8942.	8942.	7714.	8501.	8501.	8501.	8501.	8501.	8501.	8501.
(INC) IN PRODUCT INVENTORIES	0.	0.	0.	0.	0.	0.	0.	0.	0.	0.	0.
GROSS PROFIT OR (LOSS) ON SALES	4664.	2767.	2767.	-1466.	5908.	5908.	5908.	5908.	5908.	5908.	5908.
LESS. SALES EXPENSES	11253.	1253.	1253.	1253.	1253.	1253.	1253.	1253.	1253.	1253.	1253.
OPERATING PROFIT OR (LOSS)	-6589.	1514.	1514.	-2719.	4655.	4655.	4655.	4655.	4655.	4655.	4655.
LESS. INTEREST											
ON LONG TERM DEBT	850.	785.	719.	1357.	1925.	1719.	1513.	1307.	1101.	895.	689.
ON SHORT TERM DEBT	0.	0.	0.	0.	140.	0.	0.	0.	0.	0.	0.
NET PROFIT OR (LOSS) BEFORE TAX	-7439.	729.	795.	-4077.	2590.	2936.	3142.	3348.	3554.	3761.	3967.
LESS. INCOME TAX	0.	0.	0.	0.	0.	0.	0.	1207.	1777.	1880.	1983.
NET PROFIT OR (LOSS) AFTER TAX	-7439.	729.	795.	-4077.	2590.	2936.	3142.	2142.	1777.	1880.	1983.

Table 9.8—33(2) *** ZAMBIA REHABILITATION PROJECT ***
INCOME STATEMENTS (FOR YEARS ENDING MARCH 31)
- INTEREST 7% - (K' 000)

	1993	1994
SALES REVENUE	30420.	30420.
COST OF SALES	24512.	24512.
VARIABLE COST	13989.	13989.
DEPRECIATION & AMORTIZATION	2022.	2022.
OTHER FIXED COST	8501.	8501.
(INC) IN PRODUCT INVENTORIES	0.	0.
GROSS PROFIT OR (LOSS) ON SALES	5908.	5908.
LESS. SALES EXPENSES	1253.	1253.
OPERATING PROFIT OR (LOSS)	4655.	4655.
LESS. INTEREST		
ON LONG TERM DEBT	483.	276.
ON SHORT TERM DEBT	0.	0.
NET PROFIT OR (LOSS) BEFORE TAX	4173.	4379.
LESS. INCOME TAX	2086.	2189.
NET PROFIT OR (LOSS) AFTER TAX	2086.	2189.

Table 9.8-34(1) *** ZAMBIA REHABILITATION PROJECT ***
FUNDS FLOW STATEMENTS (FOR YEARS ENDING MARCH 31)
- INTEREST 7% - (K' 000)

	1981	1982	1983	1984	1985	1986	1987	1988	1989	1990	1991
SOURCES OF FUNDS	22880.	-2457.	16563.	3863.	-71.	6677.	6677.	6677.	6677.	6677.	6677.
CASH GENERATED FROM OPERATION	0.	-6114.	1989.	1989.	-1471.	6677.	6677.	6677.	6677.	6677.	6677.
PROFIT BEFORE TAX, INTEREST	0.	-6589.	1514.	1514.	-2719.	4655.	4655.	4655.	4655.	4655.	4655.
DEPRECIATION & AMORTIZATION	0.	475.	475.	475.	1249.	2022.	2022.	2022.	2022.	2022.	2022.
FINANCIAL RESOURCES	22880.	3657.	14573.	1874.	1400.	0.	0.	0.	0.	0.	0.
SHARE CAPITAL	12880.	0.	0.	0.	0.	0.	0.	0.	0.	0.	0.
LONG TERM DEBT	10000.	3657.	14573.	1874.	0.	0.	0.	0.	0.	0.	0.
SHORT TERM DEBT	0.	0.	0.	0.	1400.	0.	0.	0.	0.	0.	0.
INCREASE IN ACCT PAYABLE	0.	0.	0.	0.	0.	0.	0.	0.	0.	0.	0.
USES OF FUNDS	12880.	1619.	5211.	14060.	5007.	6245.	4499.	4293.	4087.	5087.	5452.
INVESTMENT IN FIXED ASSET	6180.	0.	3657.	14572.	1875.	0.	0.	0.	0.	0.	0.
LAND AND SITE IMPROVEMENT	0.	0.	0.	0.	0.	0.	0.	0.	0.	0.	0.
CONSTRUCTED FACILITIES	6180.	0.	3373.	13440.	1771.	0.	0.	0.	0.	0.	0.
PRE-INVEST. & START-UP EXP	0.	0.	0.	0.	0.	0.	0.	0.	0.	0.	0.
INTEREST DURING CONSTRUCTN	0.	0.	284.	1132.	104.	0.	0.	0.	0.	0.	0.
INCREASE IN CURRENT ASSET OTHER THAN CASH	6700.	0.	0.	0.	0.	0.	0.	0.	0.	0.	0.
INCR(DECR) ACCT RECEIVABLE	0.	0.	0.	0.	0.	0.	0.	0.	0.	0.	0.
INCR(DECR) IN INVENTORIES											
PRODUCTS	0.	0.	0.	0.	0.	0.	0.	0.	0.	0.	0.
MATERIALS	6700.	0.	0.	0.	0.	0.	0.	0.	0.	0.	0.
DEBT SERVICES	0.	1619.	1554.	1488.	3132.	6245.	4499.	4293.	4087.	3881.	3674.
REPAYMENT OF LONG TERM DEBT	0.	769.	769.	769.	1774.	2780.	2780.	2780.	2780.	2780.	2780.
REPAYMNT OF SHORT TERM DEBT	0.	0.	0.	0.	0.	1400.	0.	0.	0.	0.	0.
INTEREST ON LONG TERM DEBT	0.	850.	785.	719.	1357.	1925.	1719.	1513.	1307.	1101.	895.
INTEREST ON SHORT TERM DEBT	0.	0.	0.	0.	0.	140.	0.	0.	0.	0.	0.
INCOME TAX PAYMENT	0.	0.	0.	0.	0.	0.	0.	0.	0.	1207.	1777.
DIVIDENDS PAYMENT	0.	0.	0.	0.	0.	0.	0.	0.	0.	0.	0.
CASH INCREASE OR (DECREASE)	10000.	-4076.	11352.	-12197.	-5078.	433.	2178.	2384.	2591.	1590.	1226.
BEGINNING CASH BALANCE	0.	10000.	5924.	17276.	5078.	0.	433.	2611.	4995.	7586.	9176.
ENDING CASH BALANCE	10000.	5924.	17276.	5078.	0.	433.	2611.	4995.	7586.	9176.	10401.

Table 9.8-34(2) *** ZAMBIA REHABILITATION PROJECT ***
FUNDS FLOW STATEMENTS (FOR YEARS ENDING MARCH 31)
- INTEREST 7% - (K' 000)

	1992	1993	1994
SOURCES OF FUNDS	6677.	6677.	6677.
CASH GENERATED FROM OPERATION	6677.	6677.	6677.
PROFIT BEFORE TAX, INTEREST	4655.	4655.	4655.
DEPRECIATION & AMORTIZATION	2022.	2022.	2022.
FINANCIAL RESOURCES	0.	0.	0.
SHARE CAPITAL	0.	0.	0.
LONG TERM DEBT	0.	0.	0.
SHORT TERM DEBT	0.	0.	0.
INCREASE IN ACCT PAYABLE	0.	0.	0.
USES OF FUNDS	5349.	5246.	5143.
INVESTMENT IN FIXED ASSET	0.	0.	0.
LAND AND SITE IMPROVEMENT	0.	0.	0.
CONSTRUCTED FACILITIES	0.	0.	0.
PRE-INVEST. & START-UP EXP	0.	0.	0.
INTEREST DURING CONSTRUCTN	0.	0.	0.
INCREASE IN CURRENT ASSET OTHER THAN CASH	0.	0.	0.
INCR(DECR) ACC T RECEIVABLE	0.	0.	0.
INCR(DECR) IN INVENTORIES			
PRODUCTS	0.	0.	0.
MATERIALS	0.	0.	0.
DEBT SERVICES	3468.	3262.	3056.
REPAYMENT OF LONG TERM DEBT	2780.	2780.	2780.
REPAYMNT OF SHORT TERM DEBT	0.	0.	0.
INTEREST ON LONG TERM DEBT	688.	483.	276.
INTEREST ON SHORT TERM DEBT	0.	0.	0.
INCOME TAX PAYMENT	1880.	1983.	2086.
DIVIDENDS PAYMENT	0.	0.	0.
CASH INCREASE OR (DECREASE)	1329.	1432.	1535.
BEGINNING CASH BALANCE	10401.	11730.	13162.
ENDING CASH BALANCE	11730.	13162.	14697.

Table 9.8—35(1) *** ZAMBIA REHABILITATION PROJECT ***
BALANCE SHEET (FOR YEARS ENDING MARCH 31)
- INTEREST 7% -

(K' 000)

	1981	1982	1983	1984	1985	1986	1987	1988	1989	1990	1991
ASSETS	22880.	18328.	32862.	34761.	30309.	28720.	28877.	29239.	29808.	29376.	28580.
CURRENT ASSETS	16700.	12624.	23976.	11778.	6700.	7133.	9311.	11696.	14286.	15876.	17102.
CASH	10000.	5924.	17276.	5078.	0.	433.	2611.	4995.	7586.	9176.	10401.
ACCOUNTS RECEIVABLE	0.	0.	0.	0.	0.	0.	0.	0.	0.	0.	0.
INVENTORIES											
PRODUCTS	0.	0.	0.	0.	0.	0.	0.	0.	0.	0.	0.
MATERIALS	6700.	6700.	6700.	6700.	6700.	6700.	6700.	6700.	6700.	6700.	6700.
NET FIXED ASSETS	6180.	5705.	8886.	22983.	23609.	21587.	19566.	17544.	15522.	13500.	11478.
INVESTMENT	6180.	6180.	9837.	24409.	26284.	26284.	26284.	26284.	26284.	26284.	26284.
LAND & SITE IMPROVEMENT	0.	0.	0.	0.	0.	0.	0.	0.	0.	0.	0.
CONSTRUCTED FACILITIES	6180.	6180.	9553.	22993.	24764.	24764.	24764.	24764.	24764.	24764.	24764.
PRE-INVEST. & START-UP EXP	0.	0.	0.	0.	0.	0.	0.	0.	0.	0.	0.
INTEREST DURING CONSTRUCTN	0.	0.	284.	1416.	1520.	1520.	1520.	1520.	1520.	1520.	1520.
LESS.DEPRECIATN & AMORTIZTN	0.	475.	951.	1426.	2675.	4697.	6718.	8740.	10762.	12784.	14806.
LIABILITIES	10000.	12888.	26692.	27796.	27422.	23242.	20463.	17683.	16110.	13901.	11224.
CURRENT LIABILITIES	769.	769.	769.	1774.	4179.	2780.	2780.	2780.	3986.	4557.	4660.
ACCOUNTS PAYABLE	0.	0.	0.	0.	0.	0.	0.	0.	0.	0.	0.
INCOME TAX PAYABLE	0.	0.	0.	0.	0.	0.	0.	0.	1207.	1777.	1880.
DIVIDENDS PAYABLE	0.	0.	0.	0.	0.	0.	0.	0.	0.	0.	0.
CURRENT PORTION OF DEBT											
LONG TERM DEBT	769.	769.	769.	1774.	2780.	2780.	2780.	2780.	2780.	2780.	2780.
SHORT TERM DEBT	0.	0.	0.	0.	1400.	0.	0.	0.	0.	0.	0.
FIXED LIABILITIES	9231.	12118.	25923.	26022.	23242.	20463.	17683.	14903.	12124.	9344.	6564.
LONG TERM DEBT BALANCE	9231.	12118.	25923.	26022.	23242.	20463.	17683.	14903.	12124.	9344.	6564.
STOCK HOLDERS EQUITY	12880.	5441.	6170.	6965.	2888.	5478.	8414.	11556.	13698.	15475.	17355.
SHARE CAPITAL	12880.	12880.	12880.	12880.	12880.	12880.	12880.	12880.	12880.	12880.	12880.
RETAINED ERNINGS	0.	-7439.	-6710.	-5915.	-9992.	-7402.	-4466.	-1324.	818.	2595.	4475.

Table 9.8-35(2) *** ZAMBIA REHABILITATION PROJECT ***
BALANCE SHEET (FOR YEARS ENDING MARCH 31)
- INTEREST 7% -

(K' 000)

	1992	1993	1994
ASSETS	27886.	27296.	26809.
CURRENT ASSETS	18430.	19862.	21397.
CASH	11730.	13162.	14697.
ACCOUNTS RECEIVABLE	0.	0.	0.
INVENTORIES			
PRODUCTS	0.	0.	0.
MATERIALS	6700.	6700.	6700.
NET FIXED ASSETS	9456.	7434.	5413.
INVESTMENT	26284.	26284.	26284.
LAND & SITE IMPROVEMENT	0.	0.	0.
CONSTRUCTED FACILITIES	24764.	24764.	24764.
PRE-INVEST. & START-UP EXP	0.	0.	0.
INTEREST DURING CONSTRUCTN	1520.	1520.	1520.
LESS.DEPRECIATN & AMORTIZTN	16828.	18850.	20871.
LIABILITIES	8548.	5871.	3195.
CURRENT LIABILITIES	4763.	4866.	3195.
ACCOUNTS PAYABLE	0.	0.	0.
INCOME TAX PAYABLE	1983.	2086.	2189.
DIVIDENDS PAYABLE	0.	0.	0.
CURRENT PORTION OF DEBT			
LONG TERM DEBT	2780.	2780.	1005.
SHORT TERM DEBT	0.	0.	0.
FIXED LIABILITIES	3785.	1005.	-0.
LONG TERM DEBT BALANCE	3785.	1005.	-0.
STOCK HOLDERS EQUITY	19339.	21425.	23615.
SHARE CAPITAL	12880.	12880.	12880.
RETAINED ERNINGS	6459.	8545.	10735.

Table 9.8—36(1) *** ZAMBIA REHABILITATION PROJECT ***
INCOME STATEMENTS (FOR YEARS ENDING MARCH 31)
- INTEREST 4% - (K' 000)

	1982	1983	1984	1985	1986	1987	1988	1989	1990	1991	1992
SALES REVENUE	21132.	19276.	19276.	18210.	30420.	30420.	30420.	30420.	30420.	30420.	30420.
COST OF SALES	16468.	16509.	16509.	16652.	24463.	24463.	24463.	24463.	24463.	24463.	24463.
VARIABLE COST	7492.	7092.	7092.	7714.	13989.	13989.	13989.	13989.	13989.	13989.	13989.
DEPRECIATION & AMORTIZATION	475.	475.	475.	1224.	1973.	1973.	1973.	1973.	1973.	1973.	1973.
OTHER FIXED COST	8501.	8942.	8942.	7714.	8501.	8501.	8501.	8501.	8501.	8501.	8501.
(INC) IN PRODUCT INVENTORIES	0.	0.	0.	0.	0.	0.	0.	0.	0.	0.	0.
GROSS PROFIT OR (LOSS) ON SALES	4664.	2767.	2767.	-1442.	5957.	5957.	5957.	5957.	5957.	5957.	5957.
LESS. SALES EXPENSES	11253.	1253.	1253.	1253.	1253.	1253.	1253.	1253.	1253.	1253.	1253.
OPERATING PROFIT OR (LOSS)	-6589.	1514.	1514.	-2695.	4704.	4704.	4704.	4704.	4704.	4704.	4704.
LESS. INTEREST											
ON LONG TERM DEBT	850.	785.	719.	1043.	1320.	1185.	1042.	899.	755.	612.	469.
ON SHORT TERM DEBT	0.	0.	0.	0.	105.	0.	0.	0.	0.	0.	0.
NET PROFIT OR (LOSS) BEFORE TAX	-7439.	729.	795.	-3739.	3270.	3519.	3662.	3805.	3949.	4092.	4235.
LESS. INCOME TAX	0.	0.	0.	0.	0.	0.	399.	1903.	1974.	2046.	2118.
NET PROFIT OR (LOSS) AFTER TAX	-7439.	729.	795.	-3739.	3270.	3519.	3263.	1903.	1974.	2046.	2118.

Table 9.8—36(2) *** ZAMBIA REHABILITATION PROJECT ***
INCOME STATEMENTS (FOR YEARS ENDING MARCH 31)
- INTEREST 4% -

(K' 000)

	1993	1994
SALES REVENUE	30420.	30420.
COST OF SALES	24463.	24463.
VARIABLE COST	13989.	13989.
DEPRECIATION & AMORTIZATION	1973.	1973.
OTHER FIXED COST	8501.	8501.
(INC) IN PRODUCT INVENTORIES	0.	0.
GROSS PROFIT OR (LOSS) ON SALES	5957.	5957.
LESS. SALES EXPENSES	1253.	1253.
OPERATING PROFIT OR (LOSS)	4704.	4704.
LESS. INTEREST		
ON LONG TERM DEBT	325.	182.
ON SHORT TERM DEBT	0.	0.
NET PROFIT OR (LOSS) BEFORE TAX	4378.	4522.
LESS. INCOME TAX	2189.	2261.
NET PROFIT OR (LOSS) AFTER TAX	2189.	2261.

Table 9.8—37(1) *** ZAMBIA REHABILITATION PROJECT ***
FUNDS FLOW STATEMENTS (FOR YEARS ENDING MARCH 31)
— INTEREST 4% — (K' 000)

	1981	1982	1983	1984	1985	1986	1987	1988	1989	1990	1991
SOURCES OF FUNDS	22880.	-2580.	16041.	3376.	-420.	6677.	6677.	6677.	6677.	6677.	6677.
CASH GENERATED FROM OPERATION	0.	-6114.	1989.	1989.	-1471.	6677.	6677.	6677.	6677.	6677.	6677.
PROFIT BEFORE TAX, INTEREST	0.	-6589.	1514.	1514.	-2695.	4704.	4704.	4704.	4704.	4704.	4704.
DEPRECIATION & AMORTIZATION	0.	475.	475.	475.	1224.	1973.	1973.	1973.	1973.	1973.	1973.
FINANCIAL RESOURCES	22880.	3534.	14052.	1887.	1051.	0.	0.	0.	0.	0.	0.
SHARE CAPITAL	12880.	0.	0.	0.	0.	0.	0.	0.	0.	0.	0.
LONG TERM DEBT	10000.	3534.	14052.	1887.	0.	0.	0.	0.	0.	0.	0.
SHORT TERM DEBT	0.	0.	0.	0.	1051.	0.	0.	0.	0.	0.	0.
INCREASE IN ACCT PAYABLE	0.	0.	0.	0.	0.	0.	0.	0.	0.	0.	0.
USES OF FUNDS	12880.	1619.	5088.	15537.	4673.	5201.	3902.	3758.	4014.	5375.	5303.
INVESTMENT IN FIXED ASSET	6180.	0.	3534.	14049.	1887.	0.	0.	0.	0.	0.	0.
LAND AND SITE IMPROVEMENT	0.	0.	0.	0.	0.	0.	0.	0.	0.	0.	0.
CONSTRUCTED FACILITIES	6180.	0.	3373.	13440.	1771.	0.	0.	0.	0.	0.	0.
PRE-INVEST. & START-UP EXP	0.	0.	0.	0.	0.	0.	0.	0.	0.	0.	0.
INTEREST DURING CONSTRUCTN	0.	0.	161.	609.	116.	0.	0.	0.	0.	0.	0.
INCREASE IN CURRENT ASSET OTHER THAN CASH	6700.	0.	0.	0.	0.	0.	0.	0.	0.	0.	0.
INCR(DECR) ACC T RECEIVABLE	0.	0.	0.	0.	0.	0.	0.	0.	0.	0.	0.
INCR(DECR) IN INVENTORIES											
PRODUCTS	0.	0.	0.	0.	0.	0.	0.	0.	0.	0.	0.
MATERIALS	6700.	0.	0.	0.	0.	0.	0.	0.	0.	0.	0.
DEBT SERVICES	0.	1619.	1554.	1488.	2786.	5201.	3902.	3758.	3615.	3472.	3329.
REPAYMENT OF LONG TERM DEBT	0.	769.	769.	769.	1743.	2717.	2717.	2717.	2717.	2717.	2717.
REPAYMNT OF SHORT TERM DEBT	0.	0.	0.	0.	0.	1051.	0.	0.	0.	0.	0.
INTEREST ON LONG TERM DEBT	0.	850.	785.	719.	1043.	1328.	1185.	1042.	899.	755.	612.
INTEREST ON SHORT TERM DEBT	0.	0.	0.	0.	0.	105.	0.	0.	0.	0.	0.
INCOME TAX PAYMENT	0.	0.	0.	0.	0.	0.	0.	0.	399.	1903.	1974.
DIVIDENDS PAYMENT	0.	0.	0.	0.	0.	0.	0.	0.	0.	0.	0.
CASH INCREASE OR (DECREASE)	10000.	-4199.	10953.	-11661.	-5094.	1477.	2776.	2919.	2663.	1303.	1374.
BEGINNING CASH BALANCE	0.	10000.	5801.	16754.	5094.	0.	1477.	4252.	7171.	9834.	11137.
ENDING CASH BALANCE	10000.	5801.	16754.	5094.	0.	1477.	4252.	7171.	9834.	11137.	12511.

Table 9.8-37(2) *** ZAMBIA REHABILITATION PROJECT ***
FUNDS FLOW STATEMENTS (FOR YEARS ENDING MARCH 31)
- INTEREST 4% -

(K' 000)

	1992	1993	1994
SOURCES OF FUNDS	6677.	6677.	6677.
CASH GENERATED FROM OPERATION	6677.	6677.	6677.
PROFIT BEFORE TAX, INTEREST	4704.	4704.	4704.
DEPRECIATION & AMORTIZATION	1973.	1973.	1973.
FINANCIAL RESOURCES	0.	0.	0.
SHARE CAPITAL	0.	0.	0.
LONG TERM DEBT	0.	0.	0.
SHORT TERM DEBT	0.	0.	0.
INCREASE IN ACCT PAYABLE	0.	0.	0.
USES OF FUNDS	5231.	5160.	5088.
INVESTMENT IN FIXED ASSET	0.	0.	0.
LAND AND SITE IMPROVEMENT	0.	0.	0.
CONSTRUCTED FACILITIES	0.	0.	0.
PRE-INVEST. & START-UP EXP	0.	0.	0.
INTEREST DURING CONSTRUCTN	0.	0.	0.
INCREASE IN CURRENT ASSET OTHER THAN CASH	0.	0.	0.
(INCREDECR) ACC T RECEIVABLE	0.	0.	0.
(INCREDECR) IN INVENTORIES			
PRODUCTS	0.	0.	0.
MATERIALS	0.	0.	0.
DEBT SERVICES	3185.	3042.	2899.
REPAYMENT OF LONG TERM DEBT	2717.	2717.	2717.
REPAYMENT OF SHORT TERM DEBT	0.	0.	0.
INTEREST ON LONG TERM DEBT	469.	325.	182.
INTEREST ON SHORT TERM DEBT	0.	0.	0.
INCOME TAX PAYMENT	2046.	2118.	2189.
DIVIDENDS PAYMENT	0.	0.	0.
CASH INCREASE OR (DECREASE)	1446.	1518.	1589.
BEGINNING CASH BALANCE	12511.	13957.	15475.
ENDING CASH BALANCE	13957.	15475.	17064.

Table 9.8—38(1) *** ZAMBIA REHABILITATION PROJECT ***
BALANCE SHEET (FOR YEARS ENDING MARCH 31)
- INTEREST 4% -

(K' 000)

	1981	1982	1983	1984	1985	1986	1987	1988	1989	1990	1991
ASSETS	22880.	18206.	32218.	34130.	29699.	29203.	30005.	30950.	31640.	30970.	30371.
CURRENT ASSETS	16700.	12501.	23454.	11794.	6700.	8177.	10952.	13871.	16534.	17837.	19212.
CASH	10000.	5801.	16754.	5094.	0.	1477.	4252.	7171.	9834.	11137.	12511.
ACCOUNTS RECEIVABLE	0.	0.	0.	0.	0.	0.	0.	0.	0.	0.	0.
INVENTORIES											
PRODUCTS	0.	0.	0.	0.	0.	0.	0.	0.	0.	0.	0.
MATERIALS	6700.	6700.	6700.	6700.	6700.	6700.	6700.	6700.	6700.	6700.	6700.
NET FIXED ASSETS	6180.	5705.	8763.	22336.	22899.	21026.	19053.	17079.	15106.	13133.	11159.
INVESTMENT	6180.	6180.	9714.	23763.	25650.	25650.	25650.	25650.	25650.	25650.	25650.
LAND & SITE IMPROVEMENT	0.	0.	0.	0.	0.	0.	0.	0.	0.	0.	0.
CONSTRUCTED FACILITIES	6180.	6180.	9553.	22993.	24764.	24764.	24764.	24764.	24764.	24764.	24764.
PRE-INVEST. & START-UP EXP	0.	0.	0.	0.	0.	0.	0.	0.	0.	0.	0.
INTEREST DURING CONSTRUCTN	0.	0.	161.	770.	886.	886.	886.	886.	886.	886.	886.
LESS.DEPRECIATN & AMORTIZTN	0.	475.	951.	1426.	2850.	4624.	6597.	8570.	10544.	12517.	14490.
LIABILITIES	10000.	12765.	26048.	27165.	26473.	22706.	19989.	17672.	16459.	13814.	11169.
CURRENT LIABILITIES	769.	769.	769.	1743.	3767.	2717.	2717.	3115.	4619.	4691.	4762.
ACCOUNTS PAYABLE	0.	0.	0.	0.	0.	0.	0.	0.	0.	0.	0.
INCOME TAX PAYABLE	0.	0.	0.	0.	0.	0.	0.	399.	1903.	1974.	2046.
DIVIDENDS PAYABLE	0.	0.	0.	0.	0.	0.	0.	0.	0.	0.	0.
CURRENT PORTION OF DEBT											
LONG TERM DEBT	769.	769.	769.	1743.	2717.	2717.	2717.	2717.	2717.	2717.	2717.
SHORT TERM DEBT	0.	0.	0.	0.	1051.	0.	0.	0.	0.	0.	0.
FIXED LIABILITIES	9231.	11996.	25278.	25422.	22706.	19989.	17273.	14556.	11840.	9123.	6407.
LONG TERM DEBT BALANCE	9231.	11996.	25278.	25422.	22706.	19989.	17273.	14556.	11840.	9123.	6407.
STOCK HOLDERS EQUITY	12880.	5441.	6170.	6965.	3226.	6497.	10015.	13279.	15181.	17156.	19202.
SHARE CAPITAL	12880.	12880.	12880.	12880.	12880.	12880.	12880.	12880.	12880.	12880.	12880.
RETAINED ERNINGS	0.	-7439.	-6710.	-5915.	-9654.	-6383.	-2865.	399.	2301.	4276.	6322.

Chapter 10.

Economic Benefits

Chapter 10. Economic Benefits

Zambia's national economy is based on the agricultural industry. To maintain and further develop the industry, it is indispensable to ensure a continued supply of fertilizers. However, since Zambia is located deep in the African continent 2,000 km from the coast, it is impossible to import necessary amounts of fertilizers from industrialized countries when necessary. Therefore, it is considered important to rehabilitate the existing fertilizer plant and to meet the country's fertilizer demand by combining its productions with those of the expansion plant now being commissioned.

This report points out saving on foreign exchange and value added increases as direct economic benefits brought about by the rehabilitation of the existing plant facilities.

10.1 Foreign Exchange Saving

Sales from increased fertilizer production brought about by rehabilitation is regarded as foreign exchange savings made by replacing imports with domestically produced fertilizers. Foreign exchange portion of the total investment, payments for long term loans and cost of importing chemicals for producing fertilizers and maintenance costs are regarded as foreign exchange outflows. However, as the maintenance cost after rehabilitation is less than that in the case without rehabilitation, the cost reduction is regarded as the foreign exchange saving. As a result, K 105 million in foreign exchange are estimated to be saved in 10 years.

10.2 Value Added

Value added to be brought about by increased fertilizer production through the rehabilitation (profit before tax + labor cost + depreciation + interest) is projected to increase by K 70 million in 10 years.

Table 10-1 Foreign Exchange Saving

(K 1,000)

	1985	1986	1987	1988	1989	1990	1991	1992	1993	1994
Foreign Exchange Portion of Investment	(-)17,251									
Proceeds from Fertilizer Sales	(-)2,585	12,625	14,850	14,850	14,850	14,850	14,850	14,850	14,850	14,850
Chemicals & Bag	259	(-)670	(-)819	(-)819	(-)819	(-)819	(-)819	(-)819	(-)819	(-)819
Maintenance	788	788	1,315	1,315	1,315	1,315	1,315	1,315	1,315	1,315
Interest Payments for Long Term Loans	(-)1,037	(-)1,971	(-)1,764	(-)1,556	(-)1,349	(-)1,141	(-)934	(-)726	(-)519	(-)311
Total	(-)19,826	10,772	13,582	13,790	13,997	14,205	14,412	14,620	14,827	15,035

Grand Total: 105,414

Table 10-2 Value Added

(K 1,000)

	1985	1986	1987	1988	1989	1990	1991	1992	1993	1994
Profit before Tax	(−)4,573	2,152	4,799	5,320	5,528	5,735	5,943	6,150	6,358	6,565
Depreciation	789	1,596	1,596	1,596	1,596	1,596	1,596	1,596	1,596	1,596
Interest	1,037	2,452	2,078	1,556	1,349	1,141	934	726	519	311
Total	(−)2,738	6,200	8,473	6,916	8,473	8,472	8,473	8,472	8,473	8,472

Grand Total : 69,686