2.4 Hotel room requirements

The volume of tourists into Pattaya has also rapidly increased in recent years. The total number of night staying tourists in Pattaya was estimated at 280,000 for 1973, 360,000 for 1974, and about 400,000 for 1975 and 1976, including both international and resident tourists. The number of international tourists is estimated at slightly over half the total volume.

The number of hotel rooms in Pattaya has expanded rapidly, especially in the last three years. (See Table 2.4.1). Pattaya is estimated to have about 3,600 rooms in total, which includes nearly 2,800 rooms in international tourist class hotels and other rooms in bungalows, etc. At present, there is considerable excess capacity because the pace in the growth of supply has exceeded that of demand.

On the basis of the forecast of arrivals in Pattaya stated above, the additional hotel rooms required are forecasted in Table 2.4.2. According to this, it is estimated that no more rooms will be required until 1981, and there will be a need for a total of 8,700 rooms by 1996.

Table 2.4.1 Rooms of Selected Hotels in Pattaya

	1972	1973	1974	1975	1976
Number of units	19	22	26	26	27
Number of rooms	1,071	1,258	1,884 2/	2,484 3/	3,365 1/
% increase rate	-	17.5	49.8	31.8	35.5
Hotel arrivals in Pattaya (in thousands)	-	279	364	400	400
% increase rate	-	-	30.5	9.9	-

Notes:
1. Based on data supplied by the Tourist Organization of Thailand.
2. 1/ In addition, other rooms in bungalows, etc., numbered more than 200, so the total number of rooms is estimated to be 3,600.
3. 2/ The major cause of the increase comes from the opening of new hotels, such as the Regent Pattaya, the Asia Pattaya and the Royal Cliff.
4. 3/ Increased mainly by the opening of the Siam Bayshore and more establishments for the Royal Cliff and the Asia Pattaya.
5. 1/ Increased mainly by the opening of the Holiday Inn, the Sands and the Weekender; and more establishments of the Royal Cliff and the Siam Bayshore.

Table 2.4.2 Additional Hotel Rooms Required in Pattaya

Year	1976	1981	1986	1991	1996
(in thousands) Visitor arrivals	400	600	800	1,000	1,200
of which Foreign tourists	210	352	500	588	660
of which Residents	190	248	300	412	540
(nights) Average length of stay	-	1.8	2.5	3.1	3.4
Foreign tourists	-	2.0	3.0	4.0	4.5
Residents	-	1.6	1.7	1.85	2.0
(annual average) Room occupancy(%)	-	80	80	80	80
Average of peak month (%)	-	95	95	95	95
Average of lowest month (%)	-	50	50	50	50
(person/room) Double occupancy	-	1.6	1.6	1.6	1.6
Total rooms required	-	2,300	4,300	6,600	8,700
Increase of rooms from 1976	-	-	700	3,000	5,100

Notes: 1. The total number of existing hotel rooms is estimated at 3,600 in 1976.

2. The average length of stay is calculated by the weighted average of foreign tourists and residents.

Due to the large share of resident tourists, the seasonal fluctuation was much more conspicuous than the national average, namely the number of tourists at the peak months of December and January was nearly 3 times as large as during the lowest months of June or September as shown in Fig. 2.4.1.

Summary of tourist arrivals and hotel room requirement for Pattaya resort is shown in Fig. 2.4.2 and 2.4.3.

Fig. 2.4.1 Hotel Arrivals in Pattaya

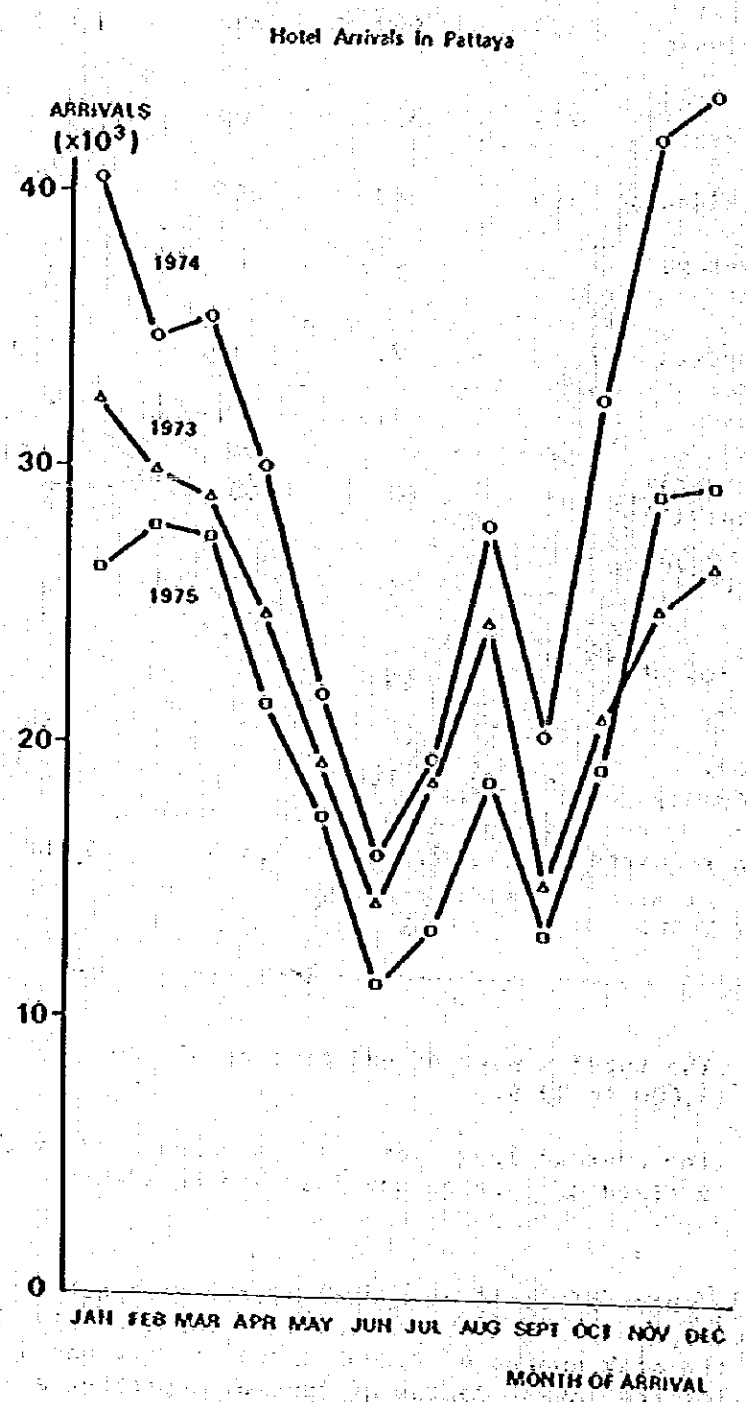

Source: Tourist Organization of Thailand

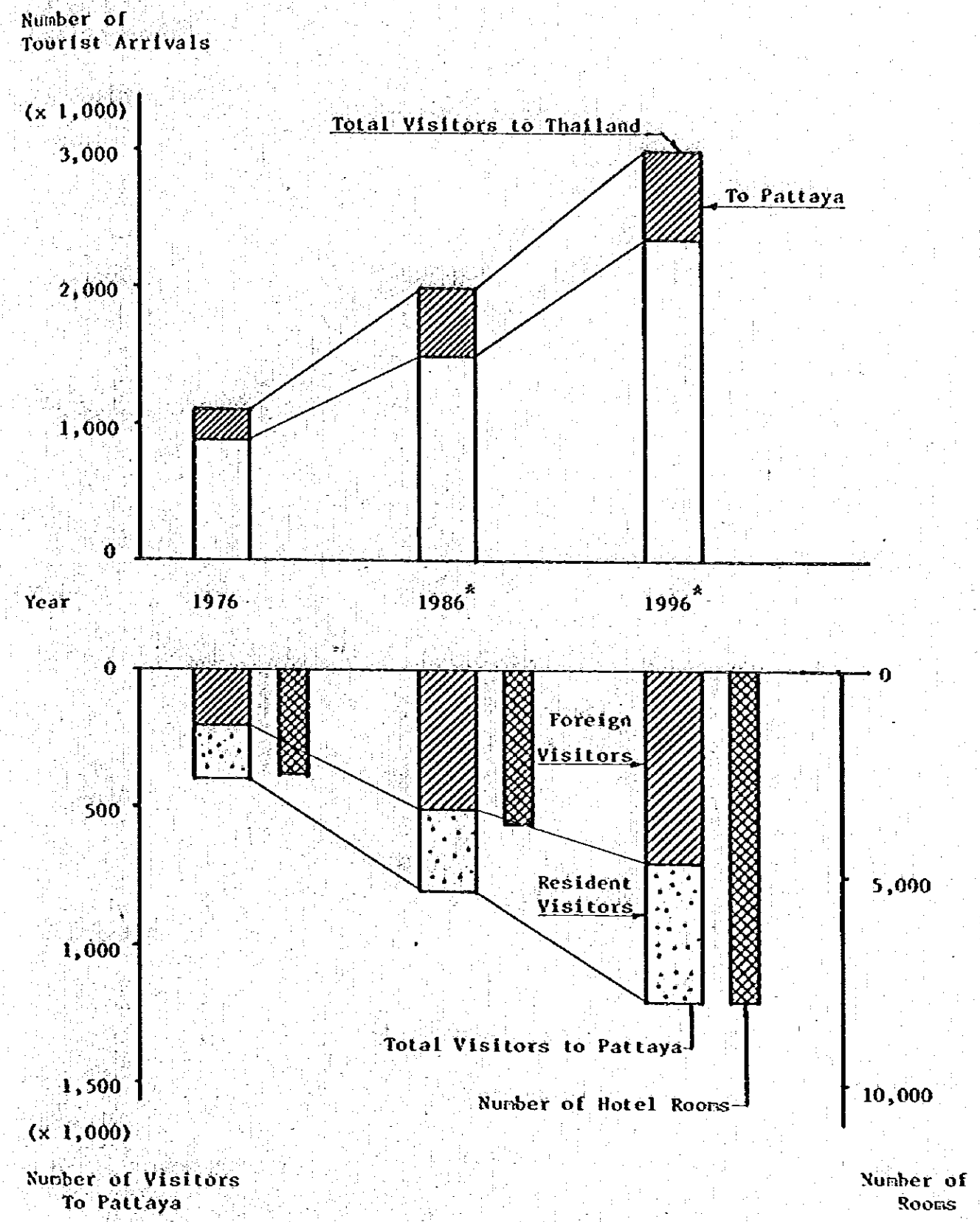

Note: * Indicates estimated values. Refer to Tables 2.2.2 & 2.3.1.

Fig. 2.4.3 Summary of Tourist Arrivals and Hotel Room Requirement

CHAPTER 3

DEVELOPMENT PLAN

1. GENERAL BACKGROUND OF DEVELOPMENT
2. DEVELOPMENT CONCEPTS
3. LANDUSE PLAN
4. ACCOMMODATION AREA
5. AMENITY CORE
6. BEACH AND OCEAN ACTIVITY AREA
7. INLAND ACTIVITY AREA
8. ISLAND
9. RESIDENTIAL AREA
10. ZONING REGULATIONS
11. ARCHITECTURE AND LANDSCAPE
12. CLASSIFICATION OF INVESTMENT

CHAPTER 3. DEVELOPMENT PLAN

3.1 General background of development

3.1.1 Several alternative concepts for the tourism development of Pattaya were studied and it was concluded that the alternative of making any necessary new development towards the adjacent area south of the existing built-up area is most favorable from the point of view of maintaining the totality of the resort and investment effectiveness. Fig. 3.1.1

3.1.2 Besides the development of Pattaya, it is necessary to plan an integrated tourist route to include all the regions surrounding Pattaya in order to further enhance the attractiveness of the resort. For the same reason the plan on the use of the sea area should also include the entire sea area extending to Bang Sarey. Fig. 3.1.2

3.1.3 An inter-regional transportation system plan is important to ensure convenient access for tourists. Fig. 3.1.3

(i) The present widening of the Sukhumvit Highway will greatly improve the connection between Bangkok and Pattaya. However, studies should be made to determine the possibility of providing a by-pass to connect the Don Muang Airport directly to Pattaya.

(ii) The planned railway line along the east of the Sukhumvit Highway should be scrutinized in terms of convenience to day trip visitors from Bangkok.

(iii) The possibility of opening the Utapao air base for commercial air transport should be studied within the framework of the overall national civil aviation policy.

(iv) Liner transport in the Gulf of Thailand should be considered for connecting Pattaya with Bangkok, Hua Hin, Songkhla, etc., by sea. The possibility of providing facilities for ocean liners at Pattaya should also be looked into.

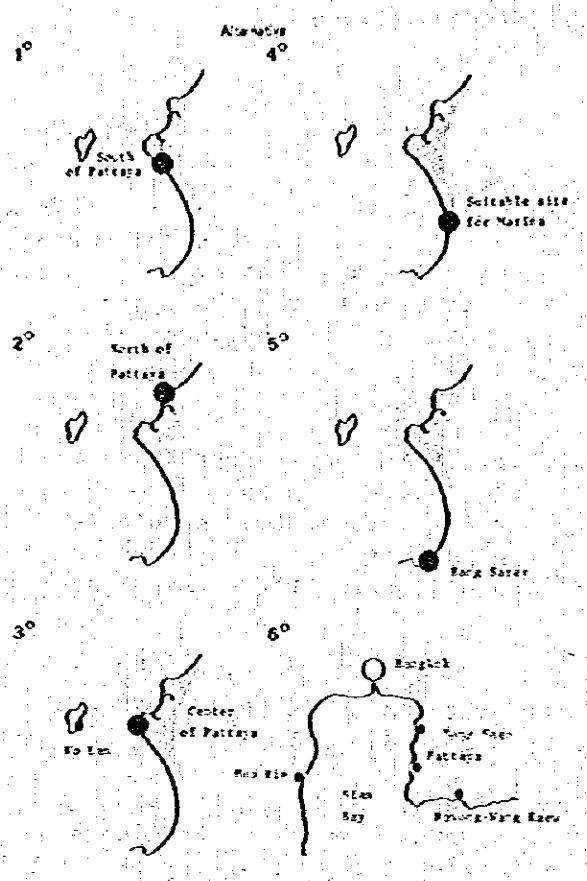

Fig. 3.1.1 Alternative

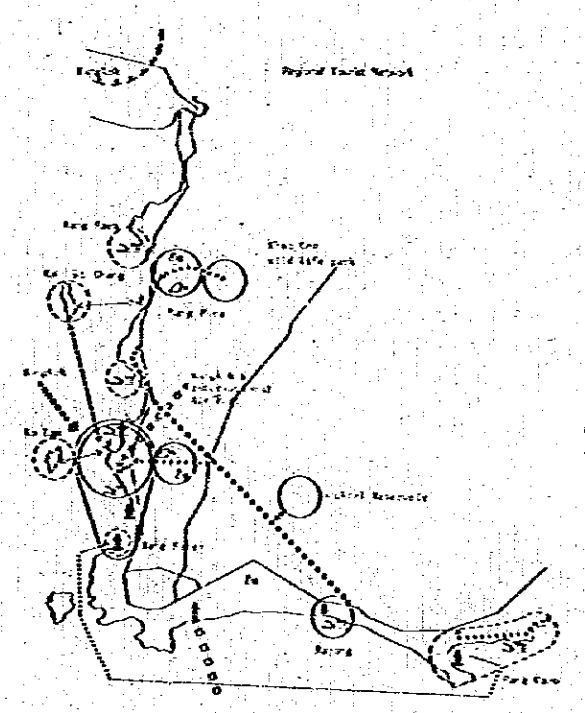

Fig. 3.1.2 Regional Tourist Network

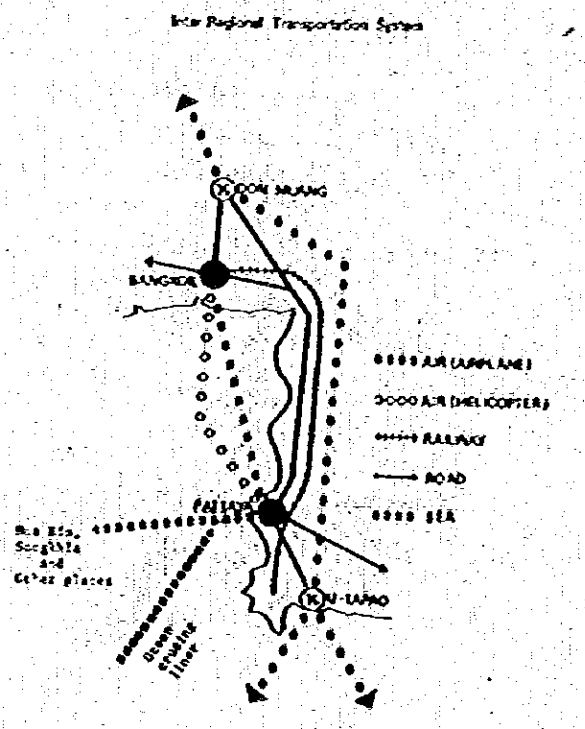

Fig. 3.1.3 Inter-regional Transportation System

3.2 Development concepts

The basic policy for the tourism development of Pattaya may be summed up as follows:

(a) Pattaya should be maintained as an international tourist resort with adequate accommodation facilities to cater for the international tourist demand. Unfortunately, rapid expansion without an overall plan has resulted in an imbalance in supply, particularly in the infrastructure sector, and a consequent deterioration of the environment. The most important policy for the future plan is, therefore, the provision of balanced facilities to maintain the tourist resort at a level compatible to international tourist requirements.

(b) To develop Pattaya into a resort with diversified ocean activities catering to all levels of ocean activity demand.

The ocean is already the main attraction of Pattaya, and there is no doubt that in the future the emphasis on the development of Pattaya will remain with the ocean and ocean activities. Moreover, the emphasis should not only be on expert ocean lovers but should be on a variety of ocean activities catering for all levels of ocean activity, both in the level of skill and in the level of age.

(c) To provide adequate supplementary inland activities.

While the emphasis is on ocean activities, in view of the future increase in the number of tourists it is important also to provide sufficient supplementary inland activities which will also serve to introduce some "Thai flavor" to foreign tourists.

(d) To cater also for domestic Thai tourists.

Although the resort is basically planned as an international tourist resort, it is anticipated that following the gradual increase in personal incomes of the Thai people, more and more domestic tourists will also share the facilities being planned for international tourists. The overnight domestic tourists will no doubt be entitled to all the facilities at the resort. Efforts will also be made to cater for the 'day-trip' domestic tourists by the provision of adequate facilities, provided that the number will not exceed the capacity of the resort, thus resulting in deterioration of the environment.

Development Goals

Basing on the above development policy, the development goals have been established as summarized below:

(a) To maintain an environment compatible to international requirements.

The ocean is the main attraction for tourists going to Pattaya, as has been verified by the questionnaire survey carried out during this study. The maintaining of the sanitary quality of the sea is therefore the main theme for environmental conservation. Indeed, pollution of the ocean may even affect the survival of Pattaya as a tourist resort, and no words can over-emphasize the importance of ocean environmental control and conservation.

Besides the ocean, the beach, the local community, etc., should also be maintained at a high level capable of attracting international tourists.

SOLUTIONS:

1. The provision of adequate sewerage and drainage facilities and the prevention of indiscreet discharges of waste water directly into the ocean.
2. The provision of a planned solid waste disposal system.
3. Improvement of the beach at Pattaya.
4. Planned redevelopment of the existing facilities.

(b) Ensuring the safety and convenience of tourists.

Since the policy is to develop Pattaya into a diversified ocean activity resort catering to all levels of ocean activity in demand, great stress has to be made on the safety and convenience of participants in ocean activities.

SOLUTIONS:

1. Regulation of mooring of boats along the beach.
2. Segregation of vehicle traffic from pedestrian traffic.
3. Regulation and control of the use of the water surface.
4. Provision of life-guards and other safety facilities along the beach.

(c) Provision of ample supplies to meet requirements.

To maintain the resort at a high standard, supplies in all sectors should always meet requirements at all times.

SOLUTIONS:

1. Planned construction of hotels and bungalows to provide ample accommodation facilities.
2. Coordinated improvement and provision of the infrastructure (water supply, electricity, communications and transportation).
3. Planned and controlled development of amenity cores.
4. Coordinated and regulated development of residential and commercial zones in the project area.

(d) Control of the domestic 'day-trip' tourists.

While the basic policy is to accept domestic tourists, special attention has to be paid to domestic 'day-trip' tourists which form very sharp 'peaks' on particular days of the year, or week, and whose stay in the resort is short. The influx of these 'day-trip' tourists should not overly cause interference or disturbance to the normal activities of the resort.

SOLUTIONS:

1. Provision of adequate car parking facilities and strict regulation of "no-parking" on the streets surrounding the accommodation area.

2. Designation of facilities at the beach for catering to 'day-trip' tourists.

3. Provision of diversified inland activities to divert the 'day-trip' tourists.

4. Planning of other tourist resorts in the vicinity to diversify the 'day-trip' tourist destinations.

(c) Emphasis on Thai atmosphere.

Although the main purpose of the tourists will be to participate in ocean activities, it is also important that the tourists should be able to enjoy a glimpse of Thai traditions and culture while they are at the resort.

SOLUTIONS:

1. Development and conservation of traditional, historical, religious or cultural resources in the area.

2. Provision of activities with a "Thai flavour" in the planning of the inland activities.

3.3 Landuse plan

(a) Landuse policy

Besides the existing hotel complex area and bungalow areas, there are at present in the study area the local community town of Na Klua to the north and some agricultural families dispersed over the area, and the characteristics of these areas are greatly different from each other.

The major part of the unbuilt-up area is planted with tapioca or coconut trees, so that overall land utilization may be said to be of the high intensity type. Given this situation, the following landuse policy was established.

1) The inland area will be conserved as much as possible as an element for displaying the natural environment. Moreover, as explained in the planning concept in the functional allocation, the swamps and physical features of the study area will be efficiently utilized.

2) The local community dispersed in the study area will be rationally encompassed in the development plan.

3) For the islands of Ko Lan and Ko Phai, the stress will be on nature, so that active development will be avoided and concentration will be made on the spot provision and improvement of facilities.

(b) Development structure

The various landuse allocations are made to meet the requirements of the landuse policy.

1) The existing hotel area will be maintained as the northern hotel area during Phase 1 (up to 1986) of the Plan.

   A southern hotel area will be developed towards the south of Pattaya Hill in Phase 2 (up to 1996).

2) The existing bungalow area towards the south of the southern hotel area will be maintained as a low density accommodation area.

3) The existing private cottage area to the north and the development on the western slope of Pattaya Hill will be controlled as low density private cottage areas.

4) The existing downtown area will be improved to serve as the main amenity core. A northern core will be newly established at the northern end of the northern hotel area. In Phase 2, a southern core will be developed for the new development area.

5) Na Klua village will remain as the main centre for the local community. A northern new town is planned to the east of the existing developed area to meet future population demand for the northern part of the study area. A further southern new town will be established to meet Phase 2 demand in the south.

6) Inland activities will be concentrated in the northern activity zone to the rear of the existing complex, the central activity zone east of Pattaya Hill and the southern activity zone in the Phase 2 development area.

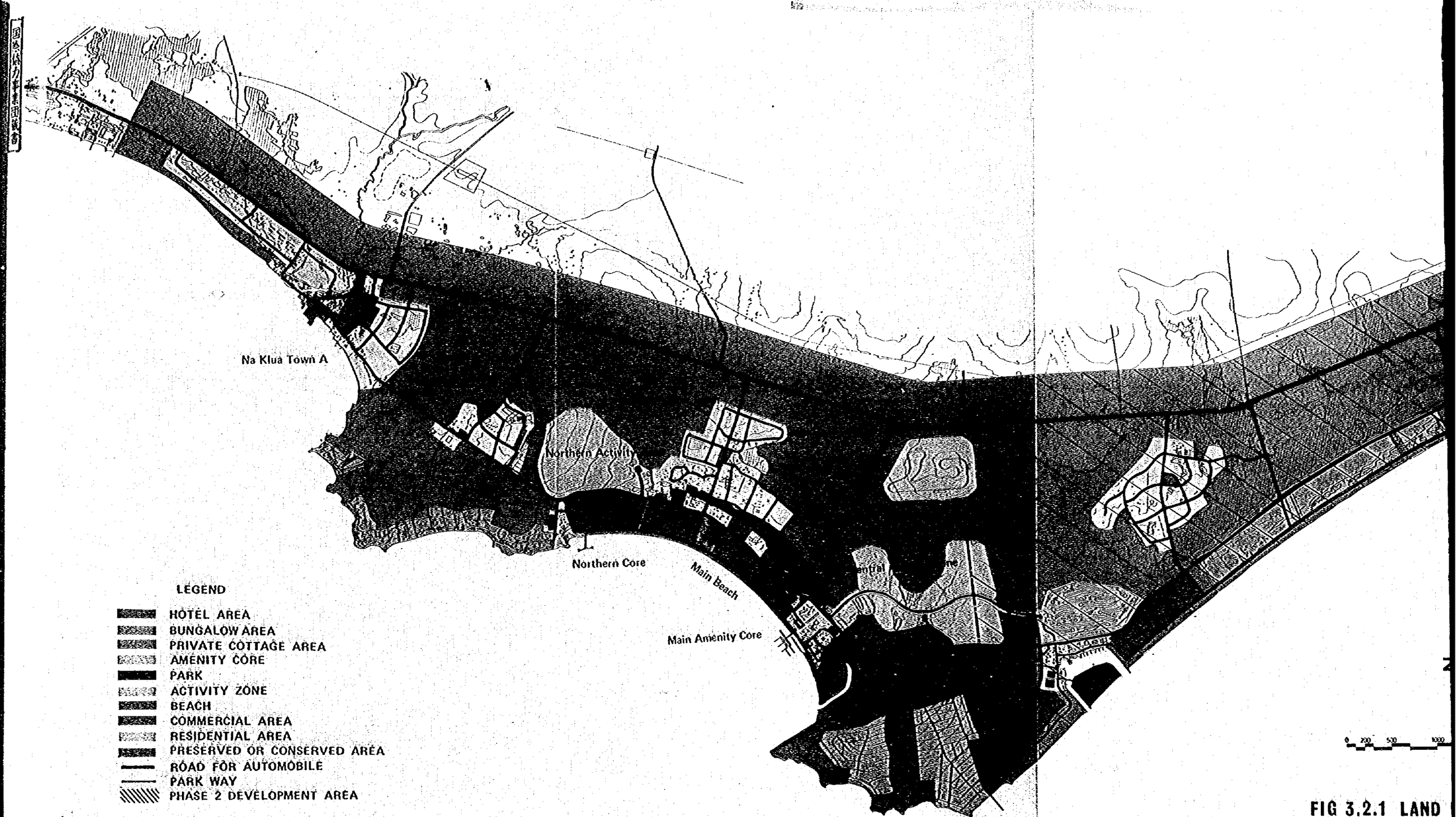

FIG 3.2.1 LAND
(MAST

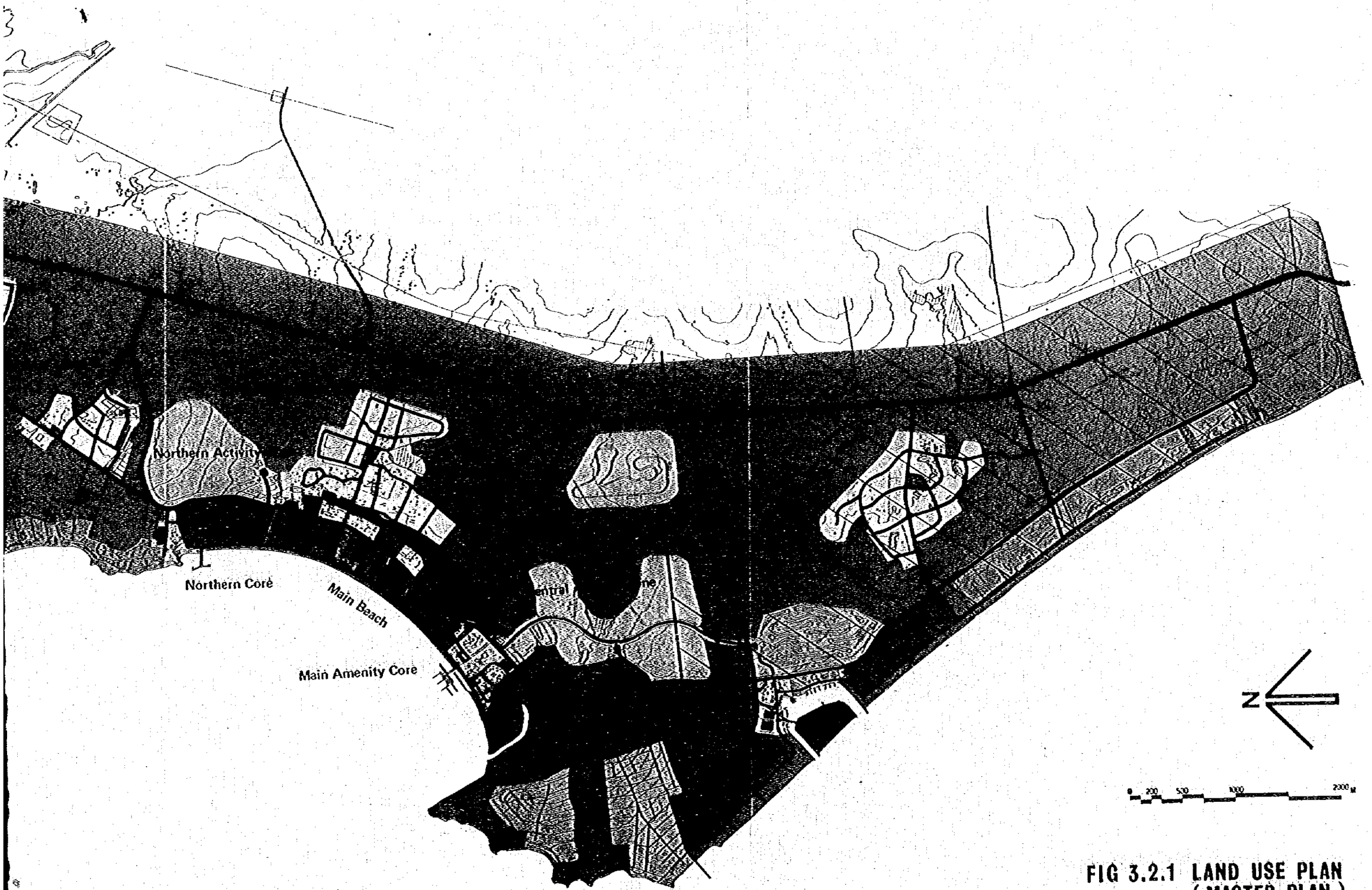

FIG 3.2.1 LAND USE PLAN
(MASTER PLAN)

7) Back road implementation will provide the key development axis for the various proposed plans, therefore the developments will be an attractive one accordingly in Phase I.

8) Areas not planned for specific use will be designated as conserved areas.

(c) Development phase

The development plan is prepared with the year 1976 as the base year and for a period of 20 years upto 1996 and divided into two phases as follows.

Phase 1, 1977 to 1986
Phase 2, 1987 to 1996

For the feasibility study, development projects in phase 1 are under consideration.

(d) Area

1) Study area

The area for the tourism development study for phase 1 and phase 2 covers the area about 500m to the east of the Sukhumvit Superhighway and extends north-south for about 16km. The islands of Ko Lan and Ko Phai as well as the surrounding minor islands are also included in phase 1 and 2. The Approximate total area is as shown below:

	Phase 1	Phase 2
Pattaya (mainland)	2,550 ha.	4,230 ha.
Ko Lan Island	220 ha.	220 ha.
Ko Phai Island	-	500 ha.
Total	2,770 ha.	5,250 ha.

In the feasibility study period, some additional areas, such as the northernmost Buddist college area and the set back area from the Sukhumvit Highway are included.

2) Development area

	Phase 1 Study in ha.	Phase 2 in ha.
Accommodation area		
Hotels	55.3	116.3
Bungalows	-	84.0
Sub-total	55.3	200.3
Private cottage area		
Northern	106.0	106.0
Central	98.0	98.0
Sub-total	204.0	204.0

Amenity core		
Northern core	7.4 (* 9.5)	7.4
Main core	**24.1 (* 14.9)	25.5
Southern core	-	10.9
Sub-total	31.5 (* 24.4)	43.8
Activity zone		
Northern A.Z.	80.0	80.0
Central A.Z.	89.0	195.0
Southern A.Z.	-	45.0
Central park	40.0	40.0
Southern park	-	20.0
Sub-total	209.0	380.0
Residential area		
Na Klua town A	123.1 (*118.6)	179.0
Na Klua town B	50.0 (* 49.3)	50.0
Northern New Town	74.0 (* 75.1)	120.0
Southern New Town	-	106.0
Sub-total	247.1 (*243.0)	455.0
Total	746.9 ha.(*735.7ha.)	1,283.1 ha.

* The area established after detail study in feasibility study.

* Excluding Ko Lan Island

** Including the temple site

3.4 Accommodation area

(a) Additional rooms and area required

Based upon the survey team's analysis of tourism and the accommodation facilities, additional room and area requirements for the next twenty years are as follows:

Table 3.4.1 Additional Hotel Rooms and Area Required

	1981	1986
Total hotel rooms required	(3,600)	4,300
Additional rooms required (room)		
Hotels	0	700
Bungalows	0	0
Total	0	700
Gross area required (ha.)		
Hotels	0	14
Bungalows	0	0
Total	0	14

In the phase 1 feasibility study stage (up to 1986), only 700 hotel rooms will need to be constructed in the existing hotel area. To achieve the most efficient investment and to deal with unforeseen factors, it is recommended that adequate hotel distribution should be maintained in the existing hotel area instead of expanding into the southern hotel area from the standpoint of infrastructure investment and strengthening of existing hotel area.

Regarding bungalow development, at present, the share in number of rooms of bungalows is about 15%, it is planned that this share will gradually increase in future to cater for long-staying guests.

(b) Location

The central hotel and bungalow area has about a 4km long beach with continuous low palm trees. The lodge accommodation area is 200m to 400m wide from the beach road. The concentrated hotel area is located in the northern half and bungalows and private resort houses are located in the southern half of the area. The general perspective of this area is characterized as a plain beach line with coconut and other trees behind the sea line except some high rise hotels.

Table 3.4.2 shows the existing hotel rooms in relation to the land area of some major hotels in Pattaya.

Table 3.4.2 Number of Rooms & Area of Existing Major Hotels

	Hotel	Rooms	Area(ha)	Area/room(m^2)	
1.	Orchid Lodge	172	5.43	315	Low Rise
2.	Hyatt Pattaya	220	1.60	75	High Rise
3.	Tropicana	116	3.47	299	Low
4.	Holiday Inn	369	2.37	65	High
5.	Regent Pattaya	276	3.20	115	High
6.	Nipa Lodge	147	2.16	145	Low
7.	Ocean View	114	2.17	190	Low
8.	Siam Bayshore	279	4.62	165	Low
9.	Royal Cliff	650	5.03	75	High
10.	Asia Pattaya	270	2.20	80	High
	Total	2,613	32.25	123	

(c) Proposed hotel sites

There are three possible sites along the beach road for high class hotels and three alternative sites along the inland park activity zone. Taking into consideration the three projects presently in the planning stage for 550 rooms, only 150 rooms will be needed during the next 10-year period. However, the planner's opinion is that if the above three proposed hotels are built on the recommended alternative sites, the overall effect on the Pattaya beach resort will be more favourable, compared with the current dispersed development (250 rooms for the Ko Lan Vacation Hotel, the Marina Hotel with 100 rooms in between the Royal Cliff Hotel and the Asia Pattaya Hotel, the Hotel Tropicana's 200 additional rooms on the present site creating a rather high density). In this hotel site analysis, priority for the hotel sites would be established and it is hoped that these hotel investors will reinvestigate the proposed sites as alternatives. The proposed hotel sites are broadened to include the total requirement of 700 rooms.

(d) Recommendation

Site "A" shown on Fig. 3.4.1 is recommended as the best hotel site to meet the 150-room requirement in Phase 1 development and the construction of a hotel at this site will strengthen the existing hotel area. This site will also give flexibility to the investor in that an addition of 50 rooms will be possible.

Regarding the order of the preference of the sites, the following list is recommended if all the 700-room requirement should be considered.

1. Site "A"
2. Site "B"
3. Site "D"
4. Site "E" and Site "F"

Sites D, E, F are suitable for more economy class hotels. Therefore, under the circumstances of lower quality demand, these three sites should be taken into consideration. Another important consideration is that the

Fig. 3.4.1 Alternative Hotel Site of Phase 1

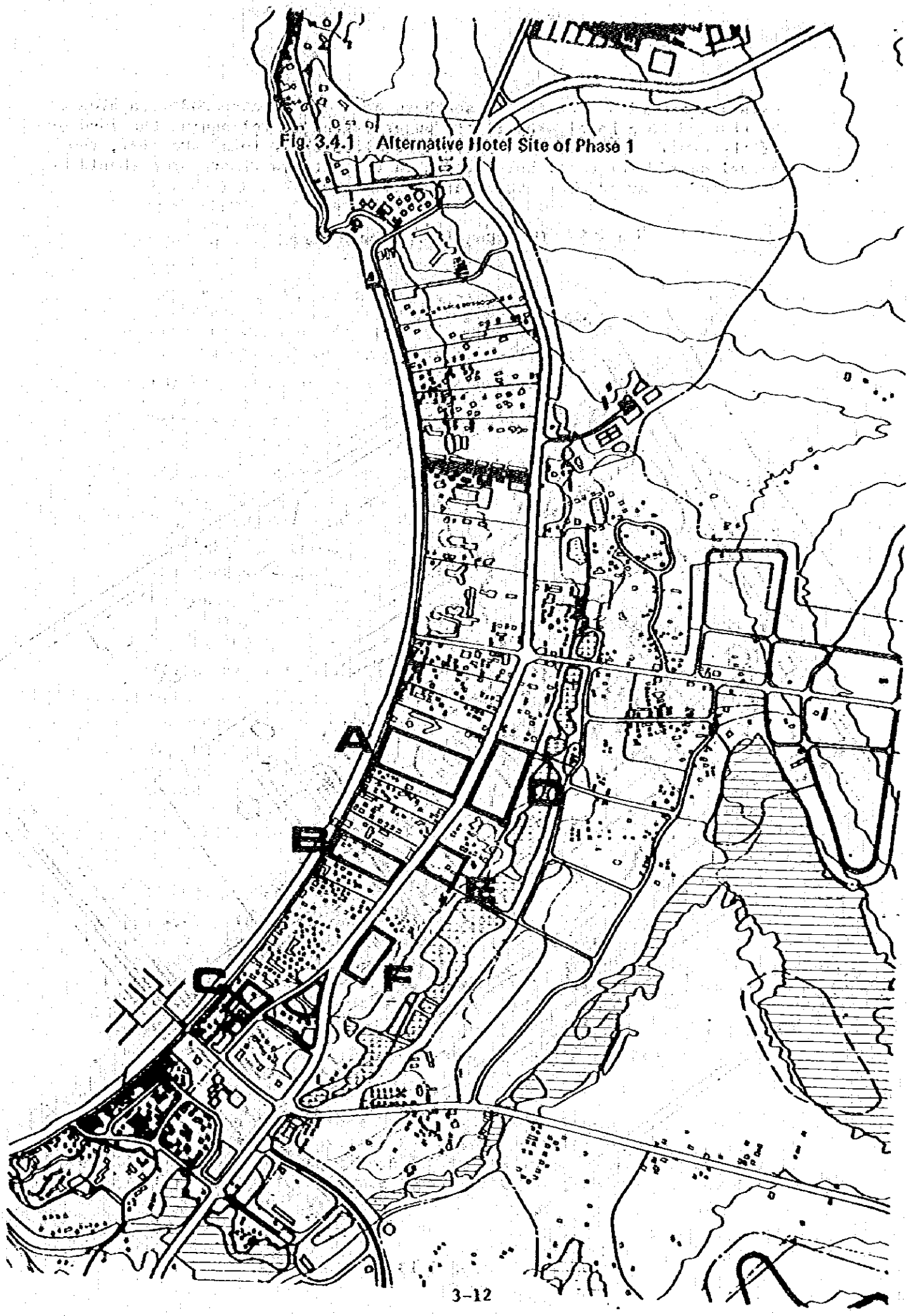

existing bungalow area in the southern half of the accommodation area can be changed to a hotel area if the owners agree to relinquish the land or if the owners would like to build a hotel on their lots. However, the actual demand for total hotel rooms in the Pattaya resort area should be respected to avoid overinvestment.

Fig. 3.4.2 Development Illustration of Site A

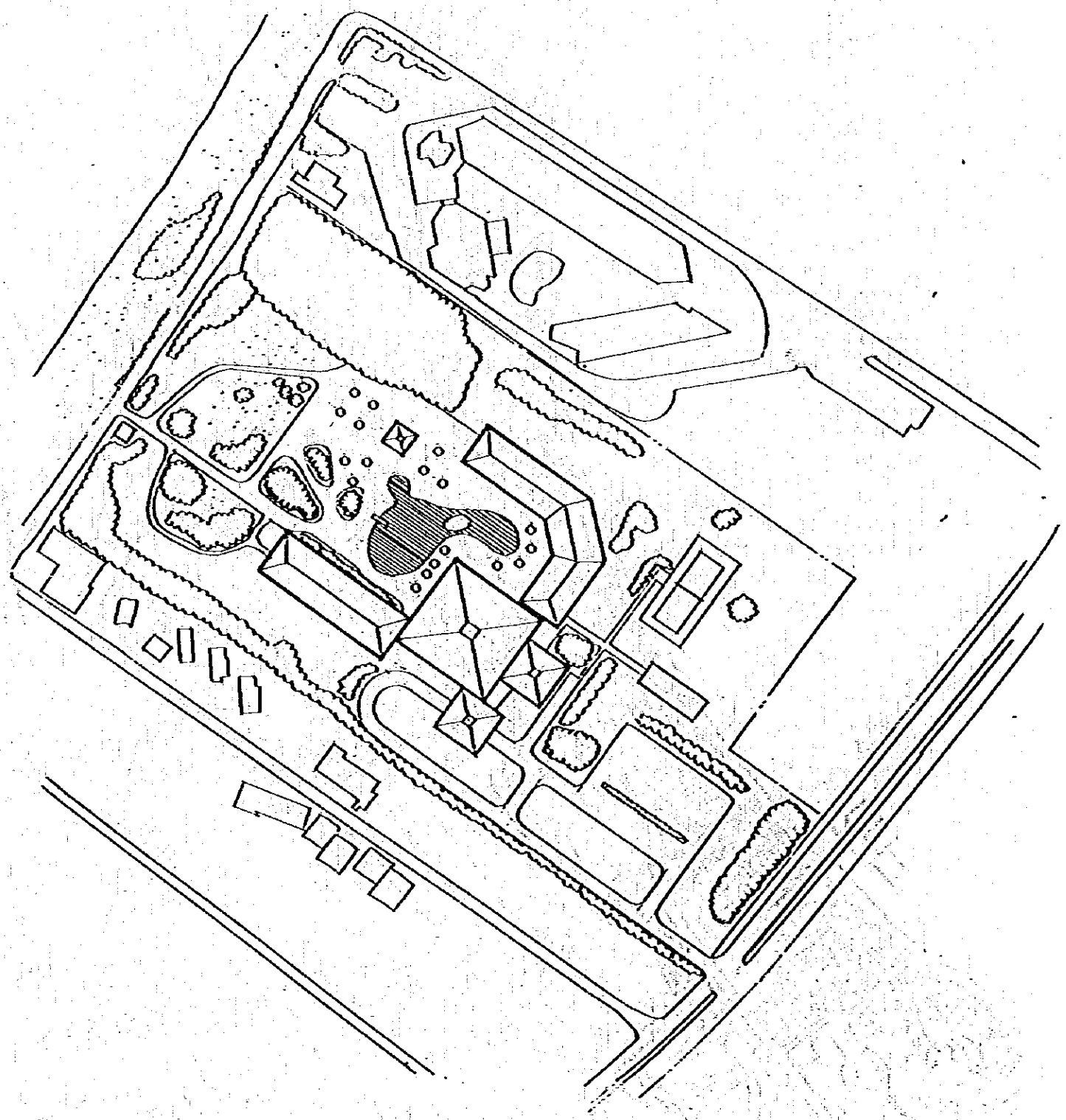

3.6 Amenity core

3.5.1 Condition of Existing Service Facilities

(1) Many restaurants are concentrated in the downtown area where most popular sea food restaurants are located. There are also some restaurants for local residents along the beach. Many bars, discos and night clubs are already established, mainly along the beach road in the downtown area.

(2) The main shopping area is also located in the downtown area in a disorderly manner, intermingling with restaurants. Another shopping area for visitors is clustered around the new international market located between the Hyatt Pattaya Hotel and the Tropicana Hotel.

(3) As attraction facilities, there are 3 movie theaters and a Thai boxing stadium with rather low patronage from tourists, and the establishments are not functioning as a unified amusement center because of their dispersed locations.

(4) Transportation facilities

Almost no transportation facilities exist at present, except two bus parking locations. A unified parking system with amenity facilities is needed.

(5) Tourist information facilities

Most arrangements for ocean and inland activities are done by agents in hotels. In future, a central tourist information center should be developed.

(6) Commercial facilities

Many tourists make use of the 3 bank facilities and two currency exchanges in the area.

On the whole, service facilities in the Pattaya beach area are not well planned for an international ocean resort. Therefore, well coordinated amenity cores and service facilities outside of the hotels are strongly recommended for the successful development of Pattaya as a resort.

3.5.2 Function and Location of Amenity Cores

Three areas with different natural features are allocated as amenity cores. The existing downtown area will be redeveloped as the main amenity core with additional amenity facilities. A northern core will be located in the area north of the Orchid Lodge Hotel. A southern core will be developed around the man-made seawater lagoon in Phase 2.

Development policies for the amenity cores in regard to their functional meaning and their characteristics are defined as follows:

(a) <u>Main Amenity Core</u>

i) As a symbol zone
ii) As a starting base for inland activities
iii) As a departure base for Ko Lan island and other islands
iv) As a main entrance to the Pattaya beach resort area for foreign and local visitors

v) As an action center
vi) As a cultural display center

In summary, it is the place where foreign visitors and local people and their culture meet. This is the place where the human side of the Pattaya image should be created.

(b) Northern Core

1) A northern core will be located on the present vacant side north of the Orchid Lodge Hotel. This sub-core is characterized as follows:

i) As an ocean-related activity center
ii) Boat mooring facilities
iii) Beach facilities
iv) Other marine-related facilities

2) A northern shopping center will serve as a new international market shopping center for foreign tourists. No entertainment facilities are recommended in the section. Basically this place is oriented to families, couples and other non-action-seeking tourists. The existing physical and architectural character does not match with these types of projected customers. Future additions to this shopping center should be carefully studied to modify existing uninviting buildings so as to achieve an interesting shopping center with a specific character.

3.5.3 Estimation of the Facility Scale

(a) The Scale of Commercial Facilities

The following calculation methods are applied for the scale estimation of restaurants, gift shops and other commercial facilities:

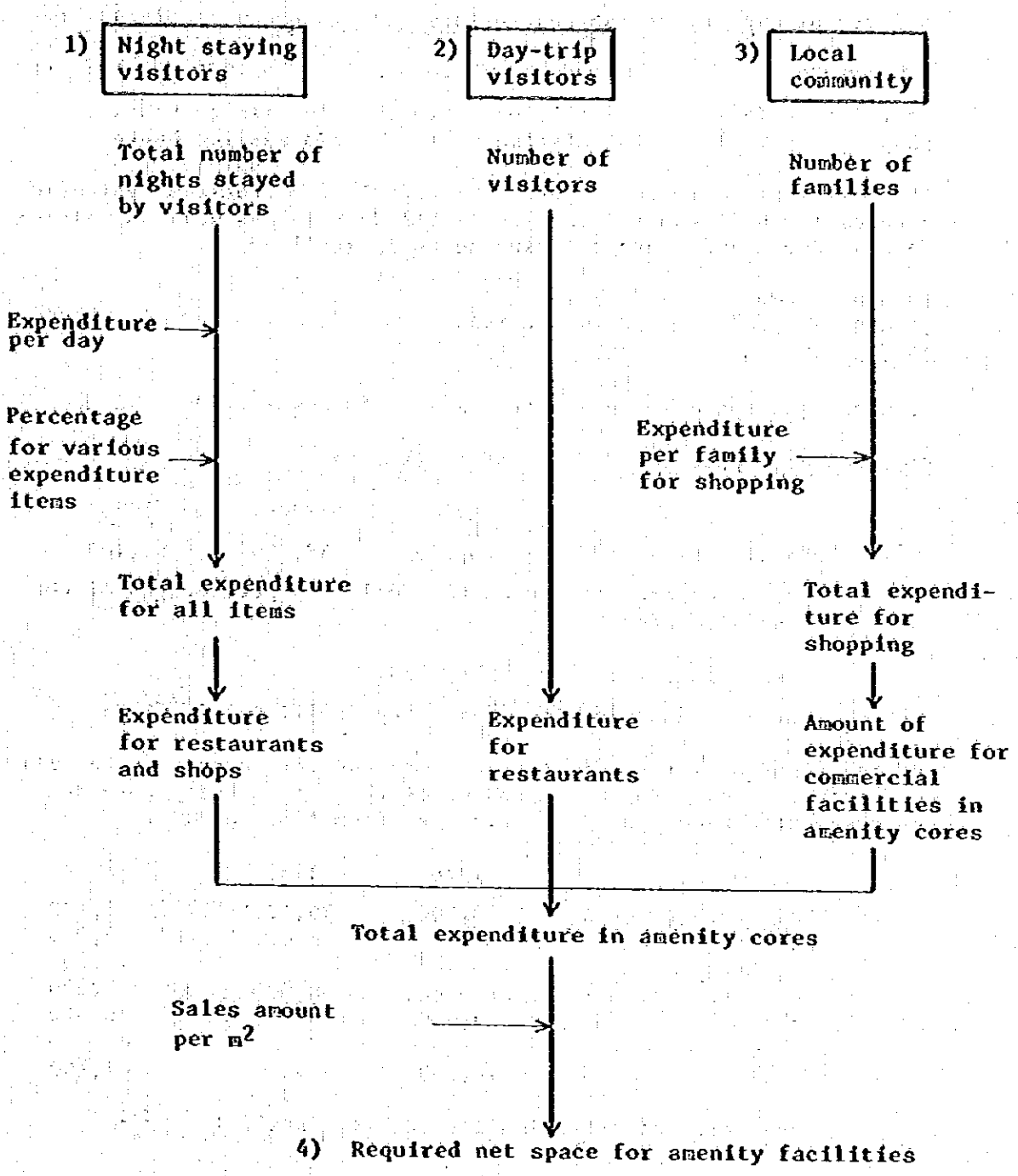

Following the previously mentioned calculation method, the total expenditure at restaurants and shops by night-staying visitors, daytrip visitors and the local community are estimated as follows. Detailed information regarding the input factors are described in the Master Plan.

Summary of expenditure at restaurants and shops

	1976	1986	1996
Restaurants	(54)	162 million bahts	316 million bahts
Shops	(55)	155 million bahts	293 million bahts

The following estimated figures (Bahts/m^2) come from the evaluation of data for Bali tourism development (Indonesia), as well as related data in Japan and average living costs in Thailand.

10,000 Bahts/m^2	1976
15,000 Bahts/m^2	1977 - 1986
20,000 Bahts/m^2	1987 - 1996

Required net space and gross area are as follows.

Required net space for commercial facilities

	1976	1986	1996
Total (m^2) *	16,900	38,400	61,100

* figures are based upon the following percentages of the service area

Restaurants 40% Shops 30%

Net area distribution of amenity facilities in m^2

The major parts of the main amenity core and the northern core will be constructed by 1986, and expansion of the main amenity core and the new southern core will be developed from 1987 to 1996.

	1976	1986	1996
Main amenity core	13,000	19,400(21,000)	25,100
Northern core		5,000 (3,700)	5,000
Southern core			17,000
New international market area		8,000	8,000
Others	3,900	6,000	6,000
Total	16,900	38,400	61,100

Gross area distribution for amenity facilities in m^2

	Building Coverage ratio	1986	1996
Main amenity core	40%	4.9ha.(5.25)	6.3ha.
Northern core	30%	1.7ha.(1.23)	1.7ha.
Southern core	30%	0	5.7ha.
New international market area	30%		2.7ha.

( ) figure represent modified area requirements for the feasibility study.

(b) Parking and Bus Terminal

1) Total number of arrivals of tourists

		1986
Foreign		500,000
Resident		300,000
Average per day :	Foreign	1,370
	Resident	822
Average Peak day:	Foreign	1,627
	Resident	976

		Scheduled bus	Chartered bus	Private cars
Ratio of vehicle type				
	Foreign	10%	60%	30%
	Resident	20%	10%	70%
Number of passengers per vehicle		30	50	3
Number of vehicles per day	1986	13	22	391
Parking for hotels (@ 1 parking lot/4.5 rooms)			64	877
			125	1,788

2) Day-trip visitors (at peak days) in 1986

	Total visitors	Scheduled bus	Chartered bus	Private cars
1986	7,500	10%	20%	70%
		750 persons	1,500 persons	5,250 persons
		50 persons/bus	50 persons/bus	6 persons/car
	Req'd	15	30	875
Parking requirement based on 80% capacity on a peak day		12	24	700 lots

3) Summary in 1986

Public parking	12	24	700
Hotel sites		64	877

1/3 of scheduled buses will park at the bus parking space in Pattaya. Therefore, the required space for buses will be as follows.

1986	9 spaces
Net parking space	24,300 m^2 (100 m^2/bus, 30 m^2/car)
Gross parking space	3.1 ha.

4) Distribution of parking space

3.1 ha. of parking space will be distributed between the main amenity core and the northern core.

The distribution ratio of the main and the northern cores is 2:1. (8.5:1.5)

in 1986:

Main amenity core	2.1 ha. (2.6)
Northern core	1 ha. (0.5)

The new modified distributed parking area in the feasibility study due to the change of northern pier is shown in ( ).

(c) Other Facilities

1) Beach facilities - toilets, shower rooms, locker rooms and others

3,000 m^2 for 12,000 visitors are provided as beach facilities with the following distribution:

Main amenity core	1,100 m^2
Northern core	750 m^2
Southern core	1,150 m^2

2) Amusement facilities

a) Multi-purpose hall

* Estimation of the Number of Visitors

1,800 visitors in 1986 and 2,500 visitors in 1996 per day are expected to participate in this facility based upon the participation rate per trip for foreign visitors of one participation per five trips. The figures represent 33% and 22% of average night staying visitors.

* The scale of the Multi-Purpose Hall

Assuming a show schedule of 2 times per day in 1986 and 3 times per day in 1996, the capacity of the hall will be 900 spectators. The general space requirement for the multi-purpose hall is 1.5m^2 - 3.0m^2/person. The net area of the hall recommended will be 1,800m^2.

b) Handicraft center and museum

The following steps were applied to estimate the scale of these facilities. The input for the calculation at each step is as follows

* 1 participation per 2 trips by foreign tourists
  " " " 10 trips by resident visitors

* Total entry of night staying visitors.	280,000 in 1986 384,000 in 1996
* Total entry of day-trip visitors	432,000 persons in 1996 based on a 5% participation rate
* Average number of entries per day	1,380 persons
* Participation rate at the same time	10%
* Number of people for these facilities	140 persons

* The scale of the facilities with other ancillary facilities — 3,000 m^2 based on a general space requirement of 10m^2 persons

c) Aquarium and Ocean museum*

The same scale, 3,000m^2 is proposed for the aquarium and the ocean museum. A similar calculation method as for the handicraft center and the museum was used for determining the scale.

* A small scale ocean museum is proposed in the pier area in the feasibility study.

3) Tourist service facilities

The main service and information center will be located in the main amenity core. The following facilities are included:

- Tourism information counter
- Bus travel agent offices
- Air travel agent offices
- Tourist police office
- Others

Required scale 500 m^2

3.5.4 The Main Amenity Core

(a) Skeleton of the Amenity Core

The existing downtown area designated as the future main amenity core has already been developed on a rather large scale, so that whatever new development is to be undertaken, various approaches have to be examined and evaluated to avoid the inadequate extension of the existing development pattern and character and to maintain the principles and objectives of the landuse plan. Keeping these points in mind, the planners established the functional relationships of the various facilities for the selection of appropriate facility locations in the amenity core area as illustrated below:

Fig. 3.5.1 Skeleton of the Amenity Core

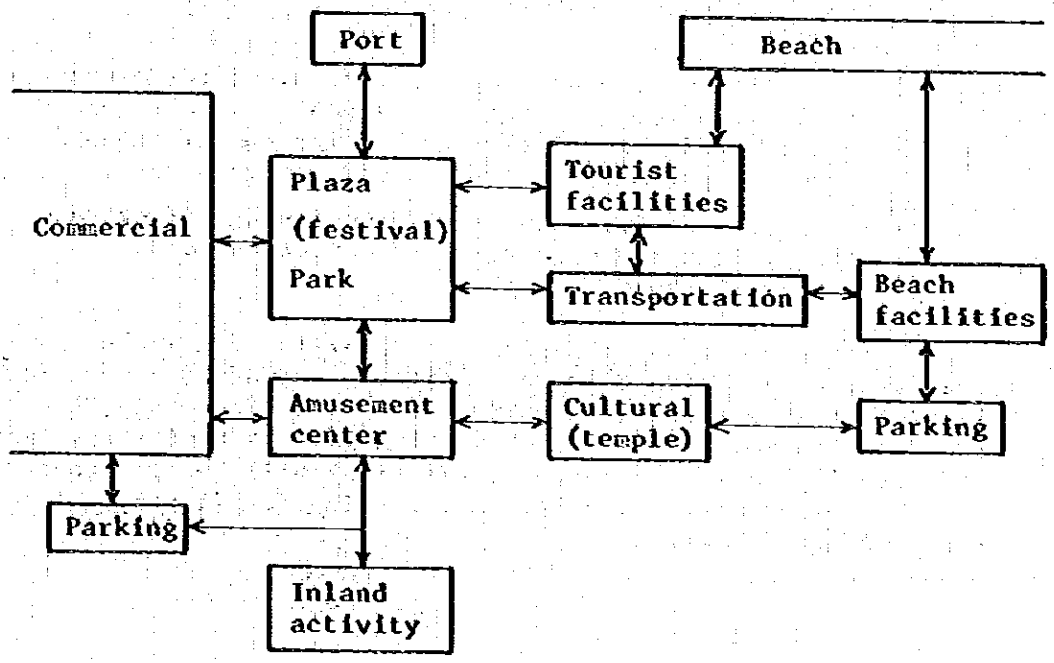

(b) Planning of the Facilities

1) Transportation

There are two feasible alternatives for improving the main road in the amenity core area. The route of the main road will determine the amenity core development pattern and its character. Therefore, in this section, the following major impact points are listed under the alternative study.

A. Expansion of the existing main road.

The main outcome of this alternative is that the proposed amusement facilities at the existing elementary school will be divided from the commercial and plaza areas. However, a close relationship with the inland activity zone will be stressed.

B. Provision of a new route for the main road.

Contrary to alternative "A", the functional relationship between the amusement and commercial facilities and festival park will be emphasized with the provision of a new route which is located along the inland side of the existing temple.

The summary of merits and demerits for the two alternatives is as follows:

	Alternative A	Alternative B
Merits	- harmonious development of amusement area and inland activity area	- harmonious development of commercial, amusement and festival park facilities
	- possibility of utilizing connecting roads in existing condition	- creation of space for a truly pedestrian-oriented park in the amenity core
	- expansion of the main road can be feasible regardless of the progress of the construction of amusement facilities	- cost of the construction of the road is comparatively less
Demerits	- separation of the amusement facilities from the commercial areas, festival parks and port	- removal of the elementary school may be required during construction of the new main road.
	- a higher cost for acquisition of land and construction of the road.	- requirement of extra connection roads

Based upon the evaluation of merits and demerits of A and B alternatives, Alternative B is more suitable and advantageous for the development of an attractive amenity core. That is to say, the major pedestrian promenade axis connecting various facilities (port - park (festival plaza) - amusement facilities) will be open to the sea and the inland activity zone. A following detail study will be undertaken for alternative "B".

A new main road will be constructed about 400 meters away from the beach. However, it is too far to promote pedestrian walk ways. Therefore, a new connection road system is established as shown in this diagrammatic sketch.

Fig. 3.5.2 Road System of the Amenity Core

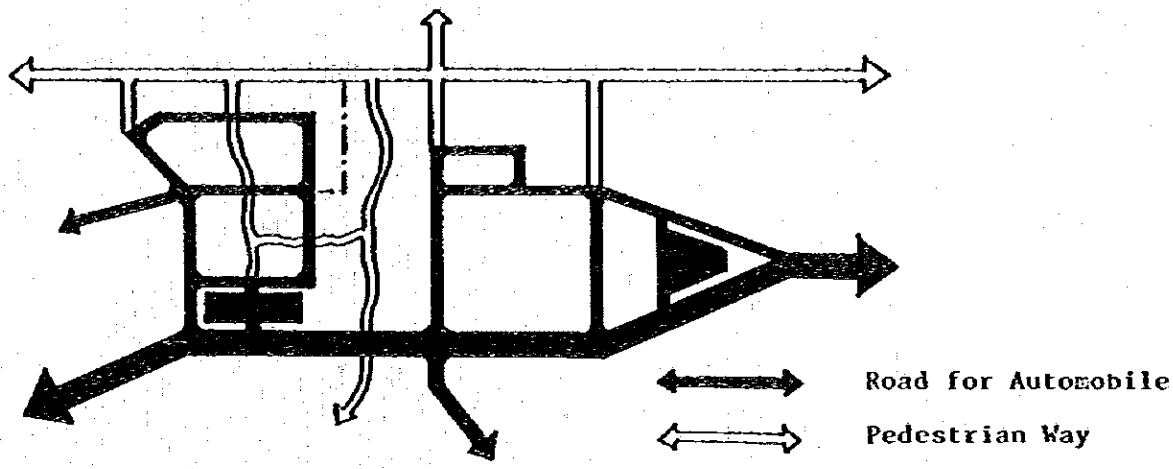

2) Commercial

The existing commercial development pattern is observed to be a linear one which extends almost 700m along both sides of the beach road. Since it is very important to maintain a comfortable beach density, given the limited natural capacity of the beach and also to accelerate a healthy and harmonious commercial tourist development, another type of development pattern, area development, is needed. The above mentioned development concepts are shown in the following diagrams.

Fig. 3.5.3 Comparison of the Commercial Area

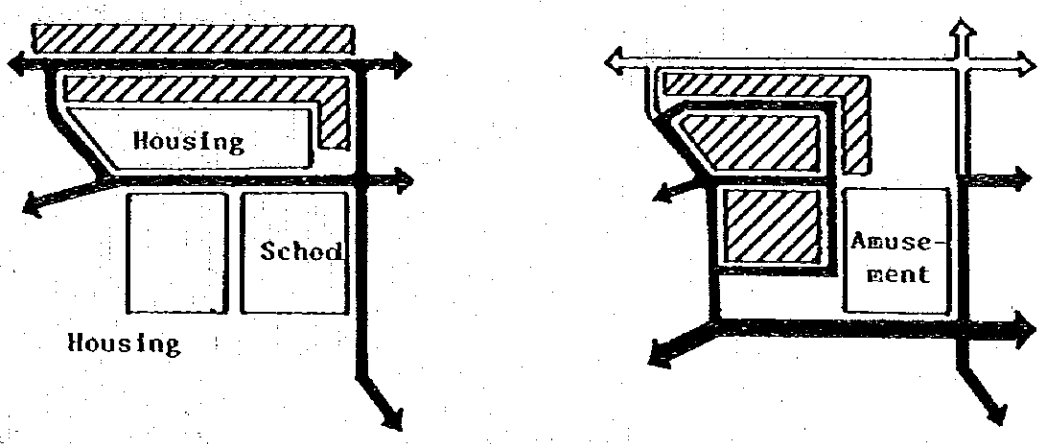

In addition to the development pattern, the other main goal is to achieve the separation of the shopping pedestrian flow from the automobile flow, so that safety and comfort of shoppers are maintained.

3) Amusement facility area

Although the main function of this facility will remain supplementary to the ocean activities, the important factor of introducing a tropical, natural Thai atmosphere to the visitors is taken into consideration for the promotion of the entertainment function.

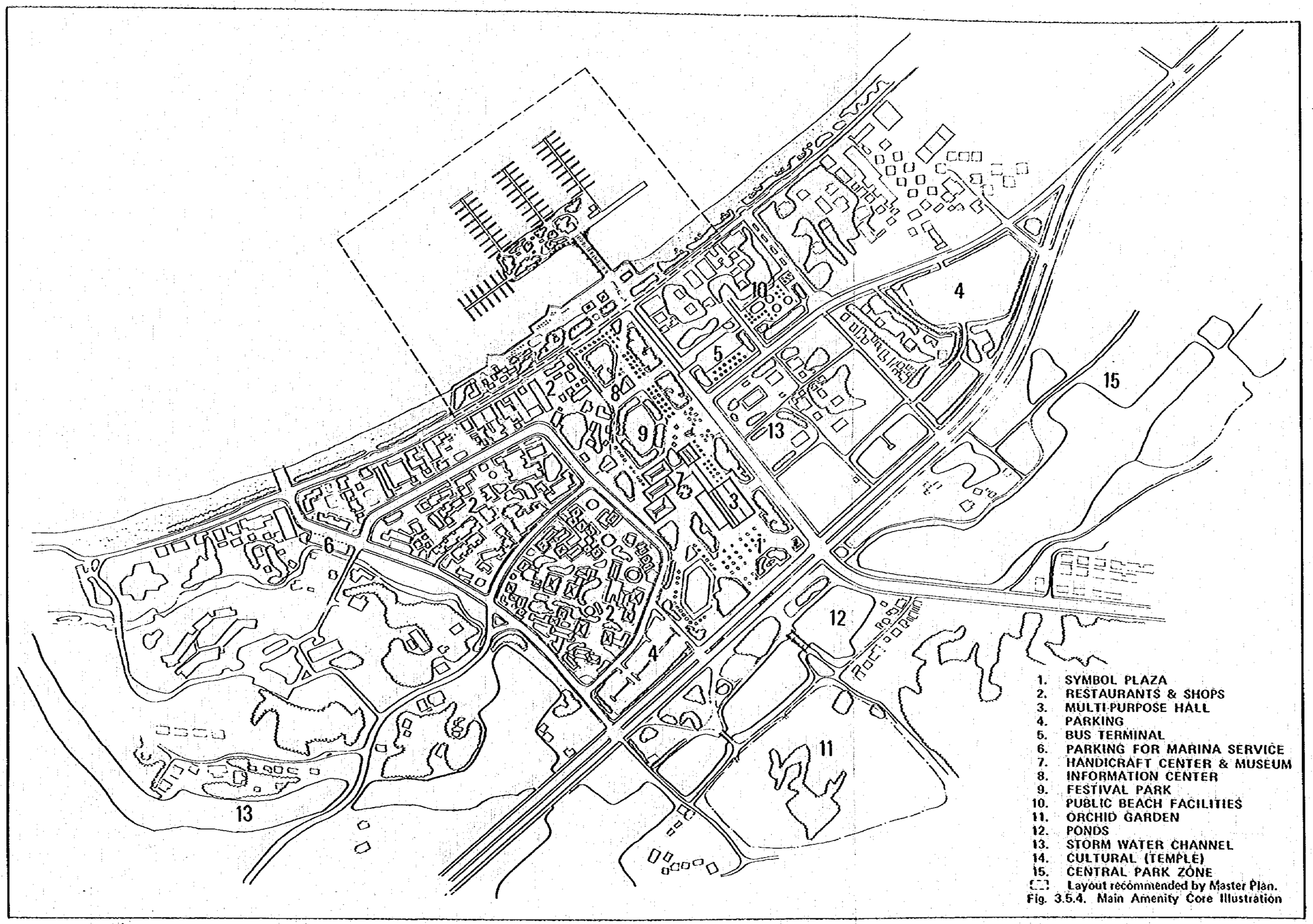

Fig. 3.5.4. Main Amenity Core Illustration

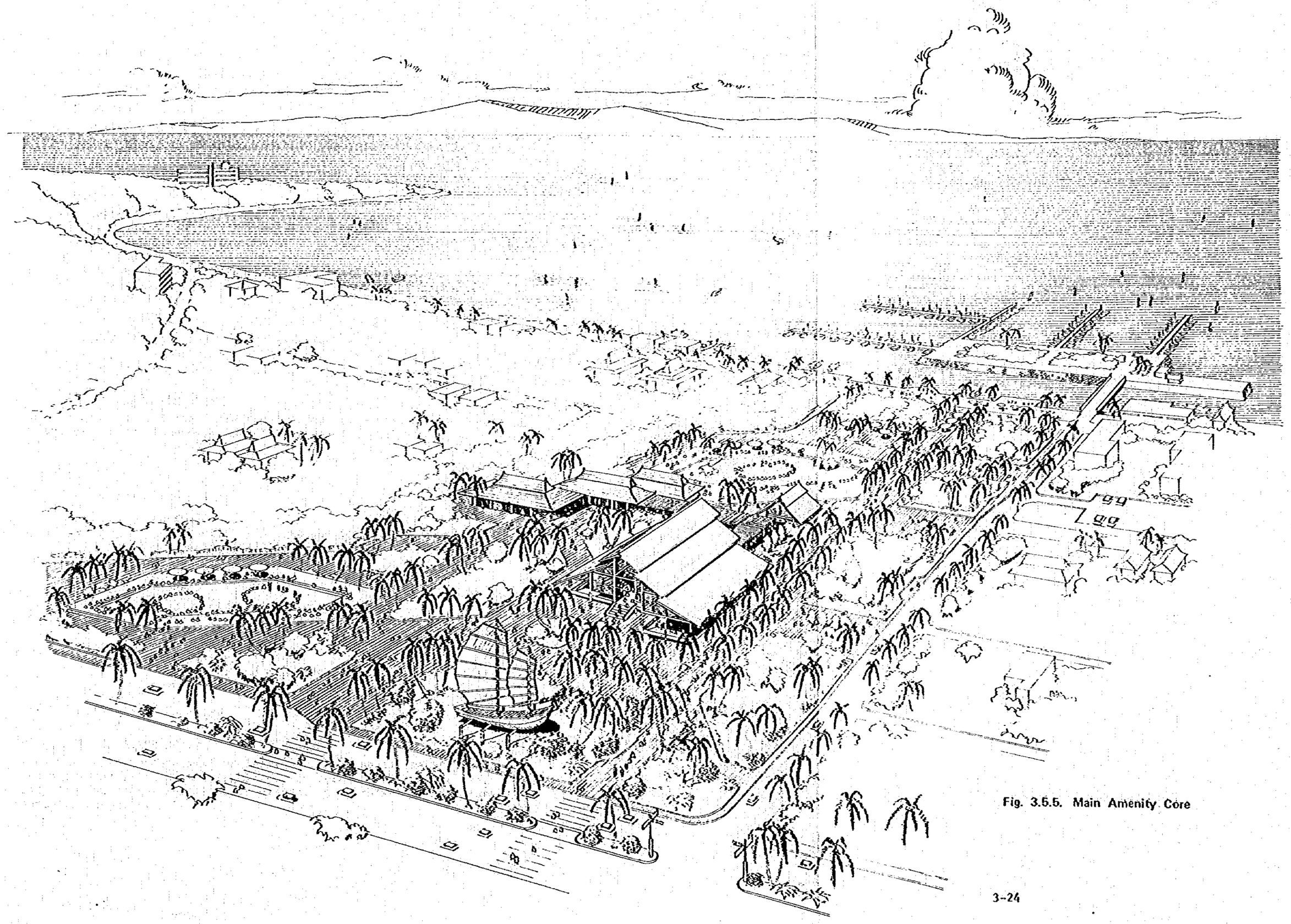

Fig. 3.5.5. Main Amenity Core

a. Multi purpose hall

Thai Dance, Thai boxing, various shows and contests, conventions and other events are to be held in this hall.

b. Handicraft center

Silk and wood handicraft processes are exhibited and the products of handicrafts can be sold. Rather than just exhibiting, this function can be developed into a local industry which is able to contribute to the welfare of local economy and the people.

c. Museum

Thai cultural and historical assets and Pattaya related records are preserved and exhibited to tourists and Thai visitors.

d. Temple

The existing temple is located at the center of the amenity facilities. The facilities of the temple are recommended to be used positively as a religious tourism resource.

e. Other facilities

Tourist facilities and beach facilities are located in the vicinity of the amenity area, however not in the center of the amenity facility area, but in the surrounding vacant lots as shown in the illustration.

(c) Implementation Schedule

The main amenity facilities are recommended to be completed before 1986 and the expansion plans of commercial facilities shall be followed after 1986.

Phase 1

(Stage 1) 1976 - 1981

- Provision of main road
- Connection roads in the commercial area
- Traffic terminal
- Parking
- Port
- Beach facilities

(Stage 2) 1982 - 1986

- Park (festival plaza)
- Amusement facilities
- Tourist facilities
- Remolding and expansion of commercial facilities

3.5.5 Northern Core

(a) Skeleton of the Northern Core

Since the northern core will be located on a presently vacant lot, the land should be reserved and regulated for future amenity core use. The following functional relationship diagram is established for future design development:

Fig. 3.5.6 Skeleton of the Northern Core

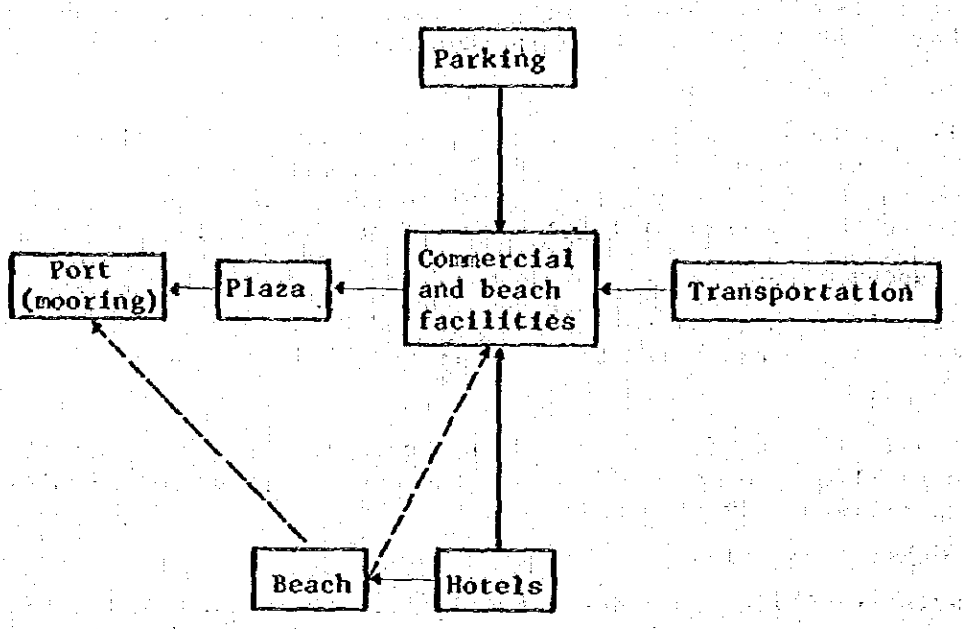

(b) Planning of the Facilities

1) Plaza

The planned site with valley-like low land will be developed as a visitors' gathering and meeting place which leads to the boat mooring area and to the restaurant facilities on the hill. Limited facilities are allowed in this area to give open space for pedestrians and bicycle riders.

2) Park

This area is located on high land with a good view of the sea. This park's character will be defined as a small ocean park. A viewing terrace should be provided for the visitors who come for shopping and eating.

3) Commercial and beach facilities

Since there is no lot line established in this area, some regulations for controlling the new lots are recommended to create a park-like shopping area with Thai and tropical features.

4) Transportation

The main road passes along the east side of the northern core. A symbol zone and a bus terminal will be added to strengthen the image for the entrance to the resort. Service roads are located on the north side to minimize the interruption between the core and the hotel area, and parking facilities are located on the north side of the service road, as shown in the illustration.

(c) Implementation Schedule

The following development method should be considered, among others. The northern core could be developed by the public sector and leased to the private sector.

Phase 1	(Stage 1)	(Stage 2)
	1976 - 1981	1982 - 1986
	- Main road construction	- Plaza
	- Terminal	- Park
	- Plaza	- Commercial facilities
	- Service roads	
	- Parking	
	- Beach facilities	
	- Commercial facilities	

(d) Modification made in the Feasibility Study

The pier and parts of commercial and parking area illustrated in figure 3.5.4 and 3.5.7 are modified in the course of feasibility study, and the recommended solutions are illustrated in chapters 2 and 6 of volume 2.

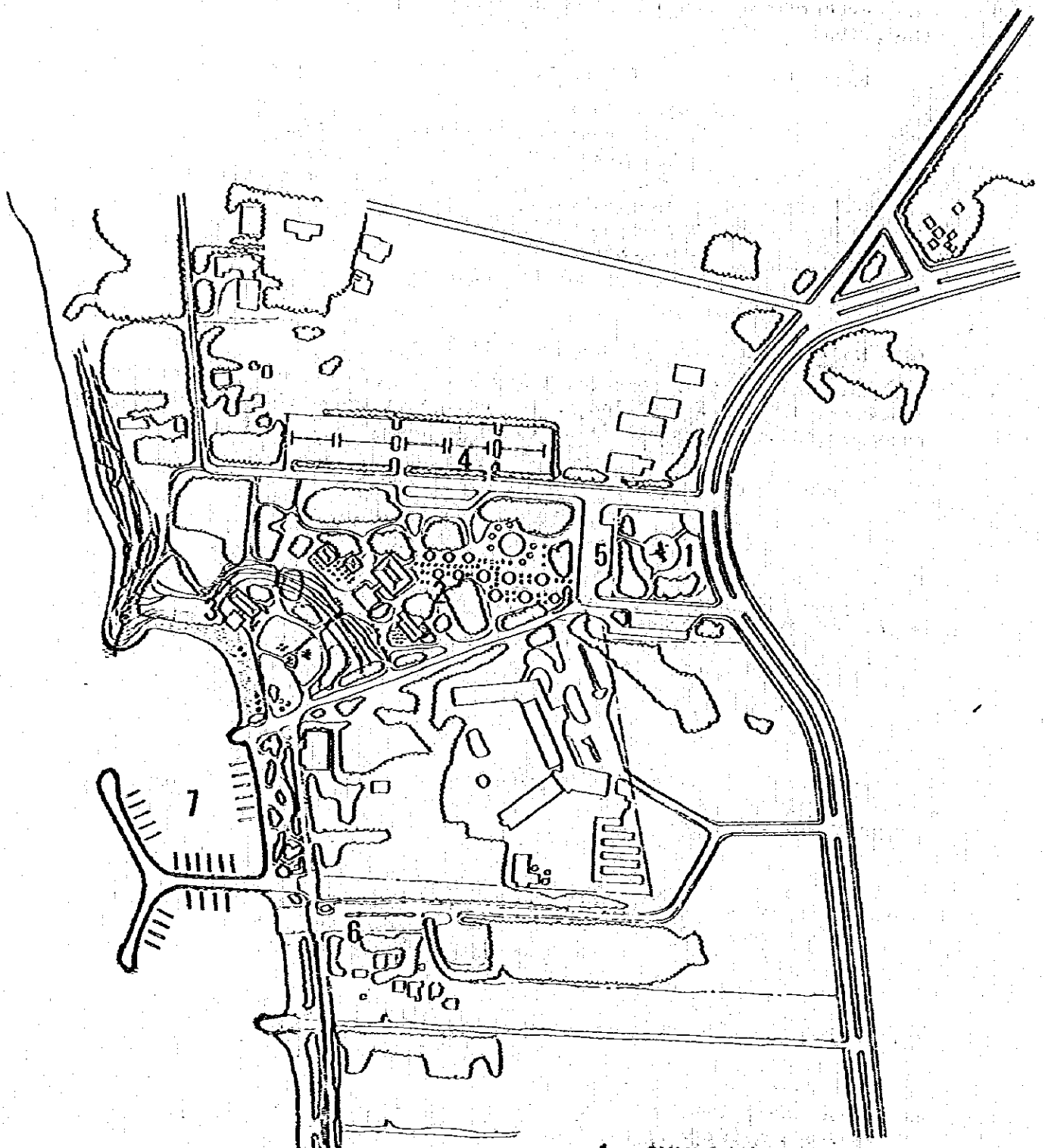

1. SYMBOL ZONE AREA
2. RESTAURANTS & SHOPS
3. YACHT CLUB
4. PARKING
5. BUS TERMINAL
6. PARKING FOR MARINA SERVICE
7. Pier is recommended in the Master Plan, but not in Feasibility Study.

Fig. 3.6.7 Northern Core Illustration

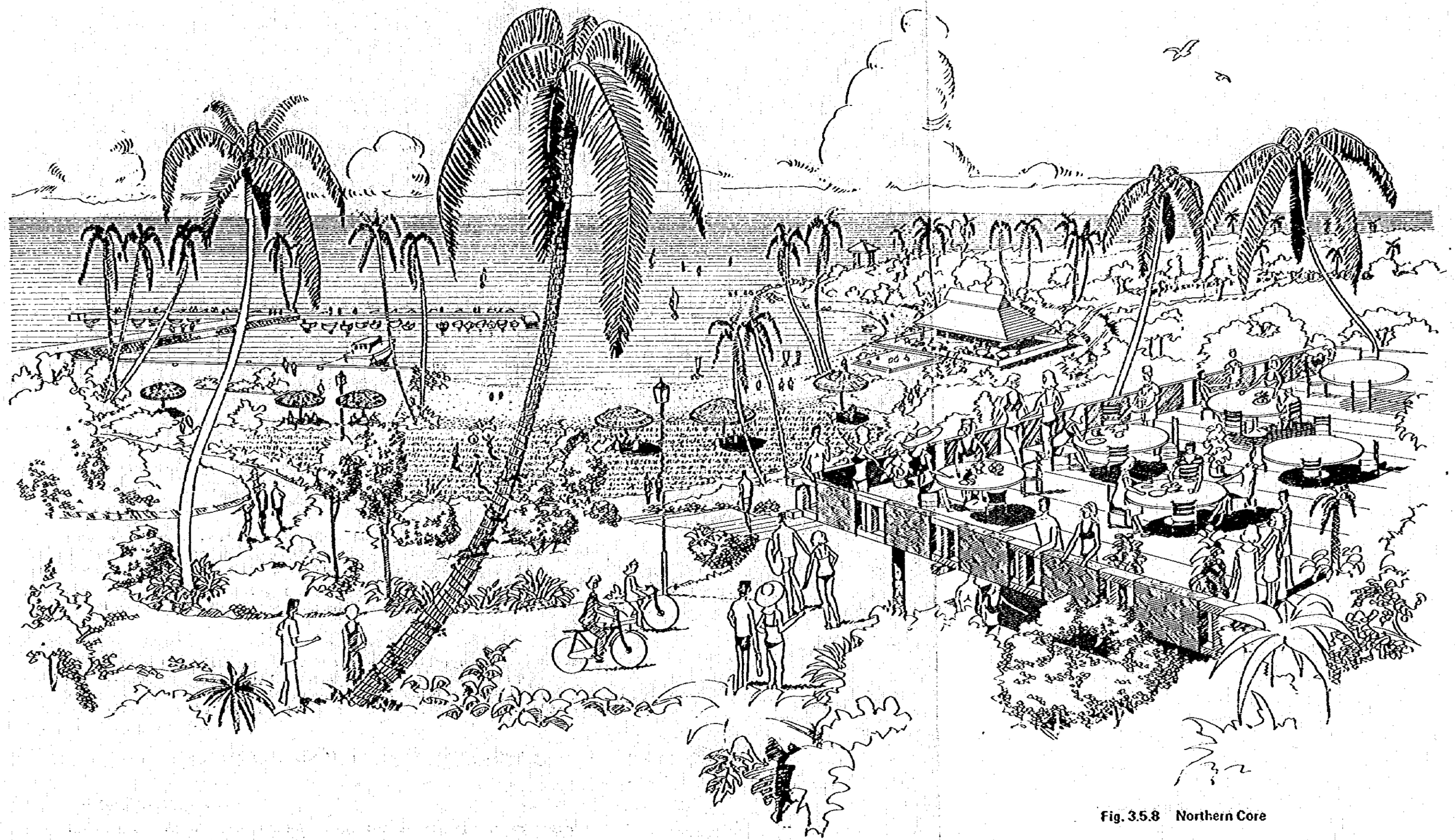

Fig. 3.5.8 Northern Core