附属資料 1

Request for new technical assistance project

Project title	: Technologies in solid state, data-processing and energy conversions
Requesting agency	: King Mongkut's Institute of Technology
Proposed source of assistance	: Japanese Government

Revised July 29, 1976

1. Background information and justification

It is generally accepted that one of the main factors for raising the standard of living is communication, and Thailand is yet still inferior in this respect. It is necessary for Thailand to develope communication systems for herself at greater speed than it is. In order to do so firmly, we must start from many points simultaneously namely, development of basic components, applications, etc.

King Mongkut's Institute of Technology has been giving education in the field of conventional telecommunications for more than 15 years under assistance from the Japanese Government. The status has been raised from a training center to a university as it is now. The number of Thai qualified staff has been increased steadily, and the construction of new facilities at Ladkrabang Campus is almost finished. Now, it seems appropriate that King Mongkut's Institute of Technology should start working in research and development in the field related to telecommunications, apart from direct teaching to students.

The fields that will surely contribute to firm establishment of communication systems in Thailand and that the Institute is ready for are:

1) Development of basic electronic components.

Basic components for all communication systems are electronic components such as diodes, transistors, integrate, circuits, resistors, capacitors, etc. It is utmost necessary to develope technology for fabrication of these electronic components in the country for further development of electronic equipments. The important area for this development is solid state technology which the Institute has already established a laboratory.

2) Applications of telecommunications.

The important area of applications of telecommunications in future is data-processing and data-communication. The Institute has been working in conventional telecommunications

for more than a decade already, it is now necessary for her to develope in the modern and up-to-data level in preparation for the future of the country.

3) Energy conversions

Operation of communication systems will be possible only with energy sources. Energy is plentiful in Thailand and is in many forms such as, solar energy, wind energy, mechanical energy, etc. It is therefore necessary to develope technology in converting these form of energy into electrical energy for supplying communication systems and other usages. The size of converters may be from a very small one for remote areas to a very large one for big cities.

As the Institute has been associated with Japanese assistances from the establishing of the Institute, it is therefore most appropriate for the Institute to ask for further assistances from Japan in the following programs:

1. Solid state technology
2. Data-processing technology
3. Energy conversions and utilizations technology.

The method of assistances should be in the line that the Institute already has some qualified staff to receive transfer of technology and know-how. The forms of assistances are proposed as follows:

1. Experts
2. Necessary equipments
3. Further training and acquainting of Thai staff in the advanced industrial organizations and universities in Japan.

2. Details of the Project

2.1 Program I - Solid State Technology

During the year 1976 assistances were received from the

Japanese government to set up a basic integrated circuit laboratory at King Mongkut's Institute of Technology, Ladkrabang Campus. The installation and testing of the equipments are now completed.

With these basic facilities, the King Mongkut's Institute of Technology can fabricate simple diffused pn junction diodes and bipolar transistors, and it is anticipated that these two objectives can definitely be fulfilled before the end of 1976. This will be the first time that such technology is established in Thailand. Also toward the end of 1976, the King Mongkut's Institute of Technology can start training students in these two basic processes, and the akills acquired by these students will be of immediate use to the expanding electronic industry in Thailand.

However, modern electronic instruments and systems contain more than simple diodes and transistors. Other essential solid state device technologies are high frequency bipolar transistors, field effect transistors, high power transistors, thyristors, light emitting diodes, digital and linear integrated circuits.

Thus, it is necessary for the integrated circuit laboratory to obtain additional equipments necessary in the fabrication of these devices and also in trainning qualified personels for the industry.

In addition to these semiconductor devices, the other two most common electronic components are the resistors and capacitors. Thus, to prepare for the future need of electronic industry, equipments for small scale production of these two components will also be needed.

2.1.1 Program goal and objective

a. To develop solid state device technology up the point where KMIT can fabricate reasonable-size integrated circuits.

b. To train highly skilled personnels in integrated circuit technology to supply the future requinements of the electronic industry in Thailand.

c. To develop the technology for the fabrication of various electronic components, for examples, resistors, capacitors, diodes, transistors, FET and thyristors.

d. To train circuit specialists so that reasonably complex and new monolithic systems can be jesigned and fabricated in Thailand.

2.1.2 End-of-program status

Various basic solid state advice technologies and a reasonable number of trained personels will be available for the local electronic industry. The standard of education in solid state devices at the King Mongkut's Institute of Technology should also be first rate.

2.2 Program II - Data Processing Technology

King Mongkut's Institute of Technology, Nondhaburi-Ladkrabang campus has given education in the field of telecommunications since 1961 with assistance from the Japanese Government. The subjects include telephone, telegraph, microwave, broadcasting, transmission and outside plant.

However, with rapid advance in electronics technology, communication systems have developed very quickly in the direction of data-communication and data-processing which will be the main role in future telecommunications. It is therefore necessary for King Mongkut's Institute of technology to develope in this direction with further assistance from the Japanese Government.

2.2.1 Program goal

The aims of this program are

(i) To establish technology and know-how in data-processing and data transmission for further development

(ii) To develope processors from hardware

(iii) To establish a data-processing system

2.2.2 Program objective

This technology will raise the standard of education in telecommunications in both undergraduate and graduate levels such that the work is up-to-date for better preparation of future of the country.

2.2.3 Conditions expected at completion of program

At the end of the program, the Institute should be able to fabricate small-scale processors. Knowledge on software techniques and data-communication should be established.

2.3 Program III - Energy conversions and utilizations technology

For the past sixteen years (1961-1976), the King Mongkut's Institute of Technology, Nondhaburi-Ladkrabang Campus, has been receiving assistances from the Japanese government in the field of telecommunications. During the early priod of this assistance program, the aim was to produce highly graded telecommunication technicians after a three year trainning program. Since the year 1969, KMIT has upgraded its education program, so that after a further two years of intense study and trainning the students graduate as highly qualified telecommunication engineers. This assistance program can be considered highly sucessful, judging from the ready acceptance of our graduates by local industries as well as government agencies, for example the Telephone Organization

to Thailand. However, in the year 1976, KMIT offer, courses to produce electrical engineers, specializing in high power technology and electrical machines. This program can be considered as a natural and timly development of the previous program, to diversify our technologies and resources so that KMIT will be better prepared to meet the future need of the rapidly expanding electronic and electrial industries in Thailand.

In order to maintain the traditional quality of our graduates, especially in the field of electrical power and machines, it is necessary for KMIT to request for a new program of assistance from the Japanese government.

2.3.1 Program goal

The aim of the program is to (1) train highly qualified electrical engineers in the field of power system and electrical machines. These two branches of electrical technology are generally considered basic to the rapid development of any country. These engineers will be expected not only to have a sound theoretical knowdledge, but also with enough practical experiences so that they are immediately useful to local industries.

2.3.2 Program objective

The program will be concentrated mainly on two levels of education. The first aim is to produce highly skilled electrical technicians, through a 3 year higher certificate study program. Following this course with a further two years of study, they will be qualified as electrical engineers. During the last two years of their study, intensive trainning will be given on the design and construction of electrical power systems and machines. Only the better students

graduated as electrical technicians will be selected to further their education.

2.3.3 Conditions expected at completion of program

After 3 years of assistance in establishing the department certificate graduate are expected to be able to construct, assemble, build and test most of small and medium size electrical machines.

2.4 Duration of the project

	1977	1878	1979	1980
1. Solid-state technology	3 years			
2. Data-processing technology	3 years			
3. Energy conversions and utilizations technology		3 years		

2.5 Project site

Faculty of Engineering
King Mongkut's Institute of Technology
Ladkrabang Campus
Bangkok

2.6 Project work plan and activities

2.6.1 Detailed work plan

a) Solid state technology

i) The additional solid state device technologies needed are high frequency bipolar transistors using both conventional silicon substrates and also gallium arsenide substrates, field effect transistors and metal-oxide-semiconductor

transistors, light emitting diode using gallium-arsenide semi-conductor, thyristors and high power transistors.

ii) Small scale fabrication technologies for resistors and capacitors should also be established.

iii) Qualified graduate and under-graduate students will be selected for trainning in these technologies. Theoretical courses on these technologies will also be given concurrently by qualified staff.

b) Data-processing technology

i) Installation of the data-processing system

ii) Fabrication of small-scale processors for various applications

iii) Development of software techniques.

c) Energy conversions and utilizations technology

i) Courses on electrical machines and power systems should be offered to selected students. The courses should also emphasize machine design techniques and construction technology.

ii) Various facilities to train technicians to operate and maintain electrical machines and power distribution system should be established. Also facilities for the construction of small and medium size electrical machines should also be provided, so that the degree graduates will have actual experience in the construction and testing machines of their own designs.

2.6.2 Time schedule

a) Solid State Technology

Details	Periods
1. High frequency bipolar transistors in silicon	April 1977 - April 1978
2. FET and MOS devices	April 1977 - April 1978
3. Integrated circuits	April 1977 - April 1978
4. High frequency bipolar transistors in gallium-arsenide substrates	April 1978 - April 1979
5. Light emitting diodes	April 1978 - April 1979
6. Thyristors and high power transistors	April 1979 - March 1980
7. Capacitors and resistors	April 1979 - March 1980
8. Personnel trainning	April 1977 - March 1980

b) Data-processing technology

Details	Period
1. Installation of the data-processing system	1977 - 1978
2. Establishing data-communication technology	1977 - 1980
3. Establishing software techniques in data-processing	1977 - 1980
4. Fabrication of small scale processors	1977 - 1980

c) Energy conversions and utilizations technology

Details	Period
1. Installation of facilities for construction and testing of both dry-type and oil-type transformer	Jan 1977 - Dec 1977
2. Installation of facilities for construction and testing of small and medium size rotating machines	Jan 1978 - Dec 1978
3. Installation of electrical machines for advanced experiments	Jan 1979 - Dec 1980

3. Staff participating in project implementation

a) Solid State technology

No.	Name	Qualification	Availability
1.	Suthi Aksornkitti	Ph. D.	April 1977 - March 1980
2.	Pairash Thajchayapong	Ph. D.	" ——— "
3.	Sitthichai Pookaiyaudom	Ph. D.	" ——— "
4.	Somkiat Supadech	MSEE	" ——— "
5.	Pradit Vachrapibool	MSEE	" ——— "
6.	Danute Viseskul	MSEE	" ——— "
7.	Niphon Sukum	Pg. D.	" ——— "
8.	Narong Hemakorn	NSEE	" ——— "
9.	Somsakdi Audcharevorakyl	B. Eng.	" ——— "

b) Data-processing technology

No.	Name	Qualification	Availability
1.	Kosol Petchsuwan	Ph. D.	April 1977 - May 1980
2.	Manoon Sukasem	NSEE	" ——— "
3.	Chom Kimpan	MSEE	" ——— "
4.	Yothin Prempraneeratana	MSEE	" ——— "
5.	Prateep Bunyatinoparatana	MSEE	" ——— "
6.	Pallop Laochareon	MSEE	" ——— "
7.	Jonkol Ngamwiwit	MSEE	" ——— "

c) Energy conversions and utilizations technology

Name	Qualification	Time available
Boonsong Sivamoksathum	Ph. D.	Jan. 1977 - Jan. 1980
Nithad Krisnachinda	B.Eng. Advance Professional degree in EE	Jan. 1977 - an. 1980
Birasak Varasundharosoth	BE	Jan. 1977 - Jan. 1980
Somjet Tiemmuang	MSEE	Jan. 1977 - Jan. 1980
Jumpol Kanchanapipool	B. Eng.	Jan. 1977 - Jan. 1980
Thongbai Ataset	B. Eng.	Jan. 1977 - Jan. 1980

4. Assistance requested

4.1 Experts

No.	Field	Total		1977		1978		1979		1980	
		No	m/m	No	m/m	No	m/m	No	m/m	No	m/m
	Solid-state Technology										
1	Expert on solid state devices	3	36	1	12	1	12	1	12	-	-
2	Expert on solid state circuits	3	36	1	12	1	12	1	12	-	-
	Data-processing technology										
3	Expert on hardware techniques	3	36	1	12	1	12	1	12	-	-
4	Expert on software techniques	3	36	1	12	1	12	1	12	-	-
	Energy conversions technology										
5	Expert on electrical machines	3	36	-	-	1	12	1	12	1	12
		15	180	4	48	5	60	5	60	1	12

4.1.1 Justification for requesting experts

Experts are required to assist the Department in establishing the required academic standard and also in training Thai staff to handle various facilities for practical experience training.

4.1.2 Job description for experts

a) Solid-state experts

The expert on solid state devices shall advise and supervise the initial development and fabrication of solid state devices and integrated circuits. Since there are several types of devices, more than one experts on devices will be required. However, only one expert should be at KMIT at any time.

The expert on solid state circuits shall advise

and supervise the design and development of integrated circuits.

b) Data-processing experts

The experts shall advise Thai staff in establishing data-processing technology at the Institute and operate jointly with the Tahi staff in developing both hardware and software techniques.

c) Electrical Machine experts

The experts shall assist in establishing courses in electrical machines and also in the initial development and operation of electrical machine laboratories.

4.2 Fellowships

Fields	Total		1977		1978		1979		1980	
	No	m/m	No	m/m	No	m/m	No	m/m	No	m/m
1. Solid state technology	5	60	2	12	2	12	1	36	-	-
2. Data-processing technology	4	72	1	24	1	36	2	12	-	-
3. Energy conversions and utilizations technology	4	108	1	24	1	24	1	24	1	36
Total	13	240	4	60	4	72	4	72	1	36

4.2.1 Justification for requesting fellowship

a) Solid state technology

The fellowships will provide opportunities for Thai staff to get actual working experiences in Japan, so that they will be familiarised not only in the processes but also the competitive atmosphere resulting in the geneses of various original ideas. In 1977 and 1978, two members of the Thai staff will be sent each year for taining and in 1979 one member for a doctorate degree.

b) Data-processing technology

It is necessary to arrange further training of Thai staff in Japan in order to gain experiences in advanced industrial organizations and advanced universities. In 1977, 1978 one member of the Thai staff will be sent for a master degree and a doctorate degree respectively, and in 1979 two members for special training.

c) Energy conversions and utilizations technology

Fellowships will provide opportunities for Thai staff to train and upgrade their academic qualification in Japan, so that they will be better prepared to assume the leadership positions expected from them. In 1977, 1978 and 1979, one member of Thai staff will be sent for a master degree each year, and in 1980 one member for a doctorate degree.

4.3 Equipments

(in unit of 1,000 US $)

Description	Rotal Cost US $	1977 US $	1978 US $	1979 US $	1980 US $
1. Equipments for esta blishing solid state laboratory for fabrication of electronic components	400	200	100	100	-
2. Data-Processing systems and facilities for data-communication	300	200	100	-	-
3. Equipments for energy conversions laboratory	300	-	100	100	100
Total	1,000	400	300	200	100

4.3.1 Justification for requesting equipments

a) Solid-state technology

The equipments are necessary for the laboratory to enable to produce small to medium scale integrated circuits.

b) Data-processing technology

A data-processing system and a data-communication laboratory and basic facilities for teaching data-processing technology.

c) Energy conversions and utilizations technology

The equipments will be needed in setting up a fully equiped high standard testing and electrical machine construction laboratory. They will be most useful for training students with actual working experience so that their acquired skills will immediately useful to local industries.

5. Thai government contribution

5.1 Professional staff

Already available

5.2 Premises and Buildings

Already available

6. Related projected

6.1 Previous project in telecommunications will be fulfilled.

6.2 All three programs are complementary. The integrated circuits and electronic components fabricated in the solid-state laboratory can be employed in the construction of data-processors, and all types of electronic equipments.

7. Future work plan

After the completion of the project in March 1980, the KMIT staff should have enough experience and equipments to carry on the research, development and training work on their own. Enough experience should also be gained so that some new equipments can be designed and constructed by KMIT.

Prepared by :

Name : Dr. Kosol Petchsuwan

Position : Dean of Engineering Faculty.
King Mongkut's Institute of Technology
Nondhaburi-Ladkrabang Campus,
Ladkrabang, Bangkok.

附屬資料 2

To: The King Mongkut's Institute of Technology,
Office of State Universities,
The Government of the Kingdom of Thailand

Questionaire concerning the proposed project on Technologies in Solid State, Data-Processing and Energy Conversions

I. Background Information

1. The present Situation of Thailand with regards the requested sectors.

   1.1 Relevant Industries

   1.2 Training and Education

   1.3 Number of Engineers and Technicians

2. The present Situation of KMIT with regards the requested sectors.

   2.1 Facilities and Equipment
   (List, working hours)

   2.2 Curriculum (Graduate level, Post graduate level)

   2.3 Themes of Research and Experiment
   (Graduate level, Post graduate level)

   2.4 Counterparts (Name, Educational Background, Experience, Reports and papers, Present subject in charge of)

   2.5 Running Cost (Amount and its breakdown by items for the past three years)

II. The Project

1. Priorities and its justification among the three sectors.

1.1 Priorities and its justification in respective sector (Program goal, Equipment)

2. Schedule of the Project (four (4) years)

2.1 Education and training program

2.2 Buildings and facilities

2.3 Japanese Experts

2.4 Education and training in Japan

2.5 Equipment

2.6 Budgeting with emphasis on the running cost

2.7 Appointment of counterparts

3. Buildings

3.1 Construction Plan (drawing)

3.2 Budget

3.3 Electricities and water

Jyunichi Yuuki

Jyunichi YUUKI

Head, Japanese Preliminary Survey Team for the King Mongkut's Institute of Technology Project

附属資料 3

King Mongkut's Institute of Technology

Answers to the questionaire concerning the proposed project on Technologies in Solid State, Data-Processing and Energy Conversions

I. Background Information

1. The present situation of Thailand with regards to the requested sectors

1.1 Relevant Industries

Thailand is now passing the initiation stage of her industrial development. Assembly work in almost all types of industries has been established.

In the solid-state industry, several companies, such as National Semiconductors, Signetics, etc, are operating assembly work in solid-state devices. The employment in these factories consists of more than 100 engineers and technicians and 5,000 workers.

There are many electronic manufacturing companies now operating in Thailand, such as Hitachi, National, Sanyo, Toshiba, Mitsubishi, etc. The industry of electrical machineries suchas electrical motors, generators, transformers, insulators, etc., have also been started recently.

However, we do not have the computer industry in Thailand. The computer applications in Thailand are still in the initiation stage. Only the past two or three years that the activities in this area began to make progress more rapidly. A separate report on this matter is attached to this note.

A table showing import-export figures of the related products are shown in the Table 1.

Table 1

Import-Export of Data-Processing Equipment
1974 - 1977
(From Foreign Trade Statistics of Thailand, Department of Customs, Bangkok)

Commodity Code		Description	Import (CIF value in million Bahts)				Export (FOB value in million Bahts)			
			1974	1975	1976	1977 Jan-Nov	1974	1975	1976	1977 Jan-Nov
845	201	Electronic Calculating Machines	41.90	46.17	43.19	37.92	1.81	0.46	7.89	6.67
845	202	Calculating Machines NES	13.60	3.05	9.98	10.74	-	-	0.25	0.76
845	203	Book-keeping and Accounting Machines	20.77	23.74	21.46	26.77	-	-	-	-
845	204	Cash Registers	4.82	4.43	7.19	5.01	-	-	0.02	-
845	300	Computer Complete set	-	-	-	0.21	-	-	-	-
845	301	Central Processing Unit	15.08	29.01	-	9.46	-	-	-	0.43
845	302	Magnetic Equipment	0.25	2.65	0.13	-	-	-	-	-
845	303	Direct Access Devices	-	0.65	-	-	-	-	-	0.06
845	304	Card Reader Card Punch	2.68	0.97	0.25	0.47	-	-	-	-
845	305	Printers	0.72	1.55	-	0.04	-	-	-	0.03
845	306	Optical Readers	0.03	-	-	-	-	-	-	-
845	307	Paper Tape Devices	-	0.12	-	-	-	-	-	-
845	309	Other Pheripheral Machines	6.57	26.39	42.98	17.58	-	-	-	-
845	311	Tabulators	0.92	-	0.11	2.45	-	-	-	-

Commodity Code		Description	Import (CIF value in million Bahts)				Export (FOB value in million Bahts)			
			1974	1975	1976	1977 Jan-Nov	1974	1975	1976	1977 Jan-Nov
845	312	Card Punching Verifying Machines	1.94	2.65	0.23	0.02	-	-	-	-
845	313	Sorters	0.12	-	0.34	-	-	-	-	-
845	314	Calculating Machines	2.14	1.70	1.69	4.48	-	6.78	67.73	106.56
845	319	Other Auxiliary Machines for use with Statistical Machines	6.17	3.07	2.77	1.03	-	-	-	2.09
845	502	Parts and Accessories for Calculating Accounting and Simitar Machines	6.34	7.55	5.35	5.98	-	0.01	0.80	0.11
845	503	Parts and Accessories for Statistical Machines including Computers NES	8.33	14.36	14.65	15.83	0.0.	0.24	0.47	0.33
		TOTAL	132.38	168.00	150.32	137.99	1.82	7.49	77.16	117.04

Import-Export of Solid-State Electronic Components

1974 - 1977

851	911	Integrated Circuits	-	-	-	0.48	-	-	-	936.20
852	112	Transistors for use with radio-radio-broadcasting etc.	0.23	0.28	0.49	1.17	-	-	-	-
852	122	Other transistors	28.53	28.10	34.33	43.02	-	339.01	837.24	0.07
		TOTAL	28.76	28.38	34.82	44.67	-	339.01	837.24	936.27

Import-Export of Electrical Products

1974 - 1977

Commodity Code	Description	Import (CIF value in million Bahts)				Export (FOB value in million Bahts)			
		1974	1975	1976	1977 Jan-Nov	1974	1975	1976	1977 Jan-Nov
85	Electrical Machinery	3,342.60	3,389.75	4,229.39	4,537.72	247.87	471.72	964.91	1,086.5

1.2 Training and Education

a) Skilled workers and technicians

The vocational Education Department of Ministry of Education is responsible for formal training of skilled workers and technicians. There are 3 levels of training:

(a) Short-course training, 3 months to one year, for students with 10 years of general education (from the secondary schools).

(b) Skilled workers or technical trades courses which are 3-year courses for students with 10 years of general education (from the secondary schools)

(c) Technicians Courses which are 2-year courses for students who have completed the 3-year technical trades courses.

The number graduates of these courses in the related fields in the academic year 1976 (May 1976 to March 1977) is as follows:

Table 2

Field	Short Courses	Technical Trades Courses	Technicians Courses
Electrical	629	828	408
Electronics, Radio and Telecommunications	952	570	371

b) University Education

The number of students in various fields of education in all national universities of Taailand is given in the 4th National Development Plan (1977-1981) as in the Table 3. The number of students in each university in 1980 is given in Table 4. Table 5 shows the number of engineering students.

Table 3. Number of Students in the 4th National Development Plan

(1977-1981) (From the Report of the University Bureau)

Field	Number of Students				
	1977	1978	1979	1980	1981
1. Education	27,742	30,533	33,616	37,840	41,725
2. Fine Arts	1,514	1,665	1,863	2,071	2,234
3. Social Sciences	68,160	72,143	76,797	81,380	84,621
4. Engineering	12,731	13,318	13,784	14,187	14,499
5. Medical Sciences	11,720	12,576	13,246	13,806	14,363
6. Law	41,553	51,775	55,434	59,447	63,461
7. Agriculture	4,991	5,394	5,711	5,947	6,092
8. Humanities	13,923	16,589	17,855	18,900	19,411
9. Natural Sciences	10,803	12,462	13,809	15,623	17,080
Total	194,132	211,061	232,115	249,201	263,486

Notes:

1) The figures includes students at all levels in all national universities, private universities and the open university.

2) According to the UNESCO classification:

"Education" covers education, physical education, etc.

"Fine Arts" covers architectire, decorative arts painting, sculpture, graphic arts, etc.

"Social Sciences" covers economics, commerce, etc.

"Engineering" covers engineering, etc.

"Medical Sciences" covers medecine, dentistry, nursing, etc.

"Law" covers law.

"Agriculture" covers horticulture, fishery, foustry, etc.

"Humanities" covers arts, languages, history, etc.

"Natural Sciences" covers physics, chemistry, etc.

Table 4. Number of Students in National Universities in Thailand Academic Year 1980 (From the 4th National Development Plan)

No.	University	Number of Students
1.	Chulalongkorn University	18,668
2.	Kasetsart University	10,903
3.	Khonkhaen University	4,925
4.	Chiangmai University	9,811
5.	Thammasart University	10,027
6.	Mahidol University	7,530
7.	Silapakorn University	2,997
8.	Songkla University	4,177
9.	King Mongkut's Institute of Technology 1)	5,923
10.	Srinakarintaviroj University 2)	14,695
11.	National Institute of Development and Administration 3)	1,720
12.	Agricultural Institute of Technology	280
13.	Ramkamhaeng University 4)	134,484
	Total	226,140

Notes:

1) Emphasis on Engineering
2) Emphasis on Teacher training
3) Only postgraduate studies
4) Open university (no entrance examination)

Table 5. Number of Engineering Students in National Universities in the 4th National Development Plan of Thailand (From the Uniuers:ty Bareou 1977)

University	1977	1978	1979	1980	1981
1. Chulalongkorn University	2,364	2,390	2,407	2,455	2,496
2. Kasetsart University	823	968	1,112	1,245	1,339
3. Khonkhaen University	766	822	856	874	879
4. Chiangmai University	489	502	547	616	702
5. Songkla University	500	537	540	560	580
Total for other Universities	4,942 (57.5%)	5,219 (57.7%)	5,462 (58.2%)	5,750 (58.5%)	5,996 (59.2%)
6. King Mongkut's Institute of Technology					
6,1 Ladkrabang Campus*	724	741	771	801	801
6.2 Thonburi Campus	1,212	1,263	1,268	1,351	1,407
6.3 North Bangkok Campus	1,714	1,825	1,883	1,903	1,913
Total for KMIT	3,650 (42.5%)	3,829 (42.3%)	3,922 (41.8%)	4,055 (41.5%)	4,121 (40.8%)
Grand Total	8,592 (100%)	9,048 (100%)	9,384 (100%)	9,813 (100%)	10,117 (100%)

* The figures cover mainly telecommunication students and do not include students from the Department of Computer and Control Engineering and the Department of Electronics that being set up.

1.3 Number of Engineers and Technicians

The education in the field of sholid-state technology has not been formally given in Thailand. Therefore, no statistics of engineers and technicians is available in this field.

For the field of data-processing technology, Chulalongkorn University has started recently. A forcast of the number of graduates in this field is given in the Table 6.

Although many universities are giving education in the

field of electrical engineering (energy conversion technology) we do not have offical statistics of number of electrical engineers in Thailand.

The number of electrical engineers and technicians graduated from KMIT Ladkrabang, since the establishment in 1960, is given in the Table 7.

The number of electrical engineers graduated from all national universities from the begining of this course upto now may be estimated as given in Table 8.

Table 6. A Forcast of Number of Graduates in Specialized Computer Courses from National Universities in Thailand

University	1977	1978	1979	1980	1981
1. Chulalongkorn University					
M.Sc.(Computer Science)	25	25	25	25	25
B.Eng.(Computer Engineering)	-	-	15	15	15
2. National Institute of Development and Administration					
M.Sc.(Computer Science)	10	10	10	10	10
3. King Mongkut's Institute of Technology Ladkrabang Campus					
B.Eng.(Computer Engineering	-	-	30	30	30
Total	35	35	80	80	80
Accumulated Total	35	70	150	230	310

Table 7. Total Graduates from KMIT LADKRABANG (1961-1977)

Academic Year \ Level of Education	Lower than Diploma	Diploma in Technology	Bachelor of Engineering	Total
1961	23	-	-	23
1962	30	-	-	30
1963	33	-	-	33
1964	-	38	-	38
1965	-	34	-	34
1966	-	43	-	43
1967	-	33	-	33
1968	-	34	-	34
1969	-	73	-	73
1970	-	79	33	112
1971	-	116	23	139
1972	-	110	56	156
1973	-	114	57	171
1974	-	102	71	173
1975	-	103	131	234
1976	-	92	101	193

Table 8.

University	Accumulation of Number of Graduates in Electrical Engineering
1. KMIT Ladkrabang	700
2. KMIT Thonburi	300
3. KMIT North Bangkok	100
4. Chulalongkorn University	2,000
5. Kasetsart University	300
6. Khonkhaen University	300
7. Songkla University	200
8. Chiangmai University	0
Total Estimated Number	3,900

2. The present situation of KMIT with regards the requested sectors

2.1 Facilities and Equipment

(i) Solid-state electronic laboratory

The laboratory is used for almost every day from Monday to Saturday and, sometimes, also on Sunday. It is used for both undergraduate and postgraduate students for demonstration, experiments, projects and research.

As no mask-making equipment was available, therefore much design work could not be done. However, we have modified a home-made machine for making simple masks.

The working hours are from 9 o'clock to 5 o'clock, but, quite often, to late night.

(ii) Data-processing

There are 2 CPU's of HITAC 10 minicomputer. It is used for education only for students at all levels: graduates and post-graduates. The computer is in operation every day including Saturday and Sunday.

However, for research work of post-graduates and members of staff, we use the IBM 370/145 at the National Statistical Office and at the Asian Institute of Technology.

(iii) Energy Conversion

The energy conversion activities are in the Department of Electrical Engineering which was started in 1974. However, the cooperation from Japan in this field has not been made. Therefore, at the moment, we have only few basic experimental sets in the fundamentals of electrical machines.

2.2 Curriculurn

The present curricula of the three fields are given in the KMIT Announcement 1977-1978, attached to this report.

2.3 Themes of Research and Experiment

The results of research work of KMIT that have been published internationally are shown in the attached KMIT RESEARCH REPORT 1978.

We also publish in Thai the Lakrabang Engineering Journal for reporting of our research results. A copy of this journal is also attached to this report.

Many technical papers from KMIT Ladkrabang have also published regularly in the Journal of Royal Engineering Society of Thailand. Recently, as many as 30 articles from KMIT Ladkrabang were submitted for the first conference in electrical engineering in Thailand.

2.4 Counterparts

The names of Thai counterparts with qualifications are given the sections 2.1.7, 2.2.7 and 2.3.7 of this report.

2.5 Running Cost

The breakdown of Thai budgets for the Faculty of Engineering, KMIT Ladkrabang, during 1976-1979 is given in the Table 9.

Table 9 Faculty of Engineering, KMIT Ladkrabang
1976 - 1979 Budget

	1976	1977	1978	1979	Remark
1. Salaries	3,083,400	3,018,200	3,181,300	3,593,500	
2. Permanent wages	428,460	355,900	398,200	483,500	
3. Temporary wages	-	-	-	-	
4. Renumeration	410,000	660,000	671,600	913,000	
5. Ordinary expenses	310,000	600,000	635,000	900,000	
6. Materials & Supplies	1,200,000	2,181,000	2,429,900	2,478,300	
7. Equipments	632,000	2,251,000	1,603,800	2,800,000	
8. Land & building	3,750,000	2,520,000	520,000	4,400,000	
9. Subsidies	-	-	175,000	220,000	
10. Other expenses	-	350,000	-	-	
Total	9,813,860	12,936,100	9,614,800	15,788,300	

II. The Project

1. Priorities and its justification among the three program:
   solid-state
   data-processing
   and energy conversions

1.1 The three programs should be arranged with the same priority and in the same duration of 1978-1982.

Program	1978	1979	1980	1981	1982	1983
a) solid-state			4 years			
b) data-processing			4 years			
c) energy conversions			4 years			

1.2 The goal and objective of each program is already state in the original proposal. However, few more points may be added as

follows:

Solid-state:

a) To promote research activities of the staff in order to keep them always qualified and to raise the standard of education in the Institute.

b) To provide facilities for research work of post graduate students and to promote the program of Master of Engineering.

c) To provide experiments for students in the Bachelor degree program.

d) To demonstrate that high technology can be developed in Thailand in order to promote confidence in industrial development to Thailand.

Data-processing:

a) To train competent personnel in data processing in both Bachelor and Master Degree Levels to lessen the shortage of trained and experienced personnel in the computer field in Thailand at the persent.

b) To provide education in data communication for development of on-line computer networks in Thailand. One possible network is the network among the three campuses of KMIT with possible extension to other national universities.

c) To provide facilities for computer education for students in engineering (not directly in computer engineering), e. g., telecommunications, electronics, power, etc., at KMIT Ladkrabang.

d) To introduce computer education to students in other fields, i.e. science, architecture and agriculture, at KMIT Ladkrabang.

e) To provide computing facilities for research work of staff and postgraduate students, which can greatly promote the program of Master of Engineering.

f) To provide computer facilities for administration work of

KMIT Ladkrabang.

g) To provide computer facilities for education, research and administration work of the other two campuses of KMIT: Thonburi and North Bangkok.

h) To offer computer services to other national universities.

Energy-conversions

a) To train qualified electrical engineers in the field power systems and electrical machines.

b) To establish high-tension technology

c) To provide facilities for testing of standards of electrical materials and products.

d) To provide facilities for research in unconventional energy conversions: solar energy, wind energy, etc., including energy storage systems.

2. Schedule of the Project

2.1 Program I - Solid - State

2.1.1 Education and training program

Type of Students	Number of Students			
	1979	1980	1981	1982
Dept of Electronics				
B.Eng. (4th & 5th years)	60	60	60	60
M.Eng. (major electronics)	40	40	40	40
Other Departments				
B.Eng. (4th & 5th years)	240	240	240	240
M. Eng.	30	30	30	30

2.1.2 Buildings and Facilities

The building for solid-state electronics will be constructed in the Thai fiscal year 1979 (Oct 78 - Sept. 79). The area of the building is approximately 4,000 square meters. The budget allocated by the Thai

Government is approximately 8 million Bahts (The budget of 15 million Bahts is allocated for electronics and computer buildings together).

	1978	1979	1980	1981	1982
Construction of the building	Building				
Installation of equipment		Equipment			
Operation			Operation		

2.1.3 Japanese experts

The number of man - months of Japanese experts within the 4 years of the program is as follows.

a) expert on solid state devices 36 man-months

b) expert on solid state circuit 36 man-months

On expert, either on devices or circuits, may take a long term residence, say one year for each visit.

The other expert may take a short term visit, say 1 to 4 months each time.

The job description for the experts is the same as given in the original proposal.

	1978	1979	1980	1981	1982	*Total* man-months
a) Expert on solid state devices		4 4 4	4 4 4	4 4 4		36
b) Expert on solid state circuit		12	12	12		36

2.1.4 Education and training in Japan

The fellowships should be arranged to provide opporternities for Thai staff to get actual working experience in Japan, so that they will be familiarised

not only in the processer but also the competitive atmosphere resulting in the geneses of various original ideas.

Type of training	1978	1979	1980	1981	1982	Total man-months
1) Doctorate degree			36 M/M			36
2) Master degree			24 M/M			24
3) Six-month industrial training		6M/M	6 M/M	6 M/M		18
4) One-months conference, semivar and observation		1 M/M	1	1	1	4
Total		19	31	31	1	72

2.1.5 Equipment

Details of Equipments for Solid-State Technology

Item	Details	Cat. No.
1	Gas purifier system consists of	
	N_2gas Purifier	MANN 2
	O_2gas Purifier, H_2gas Purifier (Japan pure hydrogen Co. Ltd.)	MAPT
2	Water purifier system 60 litre/min (for 6 outlets)+ quality measuring equipment	
3	Mask making system consists of	
	a) Coordinatograph and accessories	MUTOH PR12-12LT
	b) Reduction camera with step and repeat facilities	SCREEN DS C-503
	c) Photographic chemicals and high resolution Plates with rubylith sheets	
4	Diffusion furnaces 1 tube for Boron driye-in 1 tube for phophorous drive-in	

Item	Details	Cat. No.
	+2 tubes (i) for gold doping and (ii) GaHs Spare quartz tubes-6, tubes and spare parts for existing phophorous diffusion furnaces. + boats + pushing rods, pipe bending apparatus	
5	Sputtering System with accessories and pure source materials	ULVAC SBR-2304 E
6	Epitaxial reator	-
7	Simple Encapsulation machine	KOTAKI
8	Interferometer (surface finish microscope) with accessories	NIKON
9	Equipments for semiconductor experiments, e.g. Hall effects, mobility measurement, + lifetime measurement, water thickness meters etc. impurity levels, temp controller for experiments	-
10	Frequency Measurementing equipments	
11	CV-measuring equipments	
12	Clean Benches	
13	Crystal Growing Equipments	
14	Material Quality Measuring Equipments i.e. X-ray, electron microscope.	

2.1.6 Budgeting with emphasis on the running cost

The budget for the running cost will be provided by the Government of Thailand.

2.1.7 Appointment of counterparts

The Thai counterparts are as follows:

No.	Name	Qualification	Remarks
1.	Dr. Pairash Thajachayapong	B.Sc.(Eng.) $s1^{st}$class Hons., A.C.G.I., Ph.D. (Cantab)	
2.	Dr. Sittichai Pookaiyaudom	B.E., 7^{st}class Hons., Ph.D. (UNSW)	

No.	Name	Qualification	Remarks
3.	Dr. Nipon Sukum	B.SC.(Hons.),Ph.D.(Livupool)	
4.	Mr. somkiat Supadej	B.Eng(KMIT),M.Eng.(Tokai)	
5.	Mr. Manus Sangwornsil	B.Eng.(KMIT),M.Eng.(Tokai)	
6.	Mr. Kanok Jainjirapongdej	B.Eng.(KMIT),M.Eng(Tokai)	
7.	Mr. Danut Wisaetkul	B.Eng.(KMIT),M.Eng.(Tokai)	
8.	Mr.Pradit Wajarapiboon	B.Eng.(KMIT),M.Eng.(Tokai)	
9.	Mr. Jongkol Yinghaeng	B.Eng. (KMIT)	
10.	Mr. Teerasak Ekaweera	B.Eng.(KMIT)	
11.	Mr. Togsuk Natsatopora	B.Eng.(KMIT)	
12.	Mr. Montree Cholpinyo	B.Eng.(KMIT)	
13.	Mr. Tonkim Heng	B.Eng.(KMIT)	
14.	Mr. Wiwat Kiranon	B.Eng.(KMIT),M.Eng.(Tokai)	Studying at Tokai Univ. for D. Eng.
15.	Mr. Somsak	B.Eng.(KMIT),1st class Hons.	Studying at Univ.of Tokyo for M.Eng,and, possibly, D. Eng.
16.	Mr. Charay Surawatpanya	B.Eng.(KMIT),1st class Hons.	Studying at Univ.of Osaka for M.Eng.and, possibly, D. Eng.

Technicians and assistants can be recruited in the coming years.

2.2 Program II - Data - Processing

2.2.1 Education and training program

Type of students	Number of students				Remarks
	1979	1980	1981	1982	
Dept. of Computer Eng.					
B.Eng. (4 & 5 year)	60	60	60	60	
M.Eng.(Major computer)	10	10	10	10	
Other Departments					
Postgroduate students (M.Eng.with major in other topics)	60	60	60	60	
3th year students	150	150	180	210	Introduction to programming
4th year students	150	150	150	180	Exercises in programming
5th year students	150	150	150	150	for projects
Other faculties at KMIT Ladkrabang					
Architecture					
3rd year	100	100	120	120	Introduction to programming
4th year	150	150	150	150	for projects
Agricultural	100	100	100	100	Introduction to programming
Other Campuses					
Thonburi:					
Postgraduates		100	100	100	M. Eng.
B. Eng. undergraduates	1,500	1,500	1,500	1,500	
B. Sc undergraduates	300	450	600	600	
North Bangkok:					
B. Eng. undergraduates	200	200	200	200	
B. Ind. Ed. undergraduates	200	200	200	200	

2.2.2 Japanese experts

The number of man-month of Japanese experts with in the 4 years of the program is as follows:

a) expert on hardware techniques 36 man-months

b) expert on software techniques 36 man-months

The expert on software should take a long term residence, say one year for each visit. The expert on hardware may take a short term visit, say 1 to 4 months each time.

The job description for the experts is the same as given in the original proposal.

	1978	1979	1980	1981	1982	Total man-months
a) Expert on software		12	12	12	12	48
b) Expert on hardware		4 4 4	4 4 4	4 4 4		36

2.2.3 Education and training in Japan

It is necessary to arrange further training for Thai staff in Japan in order to gain experiences in research and development work. They may be then expected as academic leaders in this field for KMIT and, consequently, for Thailand.

Type of training	1978	1979	1980	1981	1982	Total man-months
1) Doctorate degree			36 M/M			36
				36 M/M		36
2) Master degree		24 M/M				24
			24 M/M			24
3) Six-month industrial training		6	6	6		18
4) One-month conference, seminar and observation		1	1	1	1	4
Total		31	55	43	1	130

2.2.4 Buildings and facilities

The building for solid-state electronics will be constructed in the Thai fiscal year 1979 (Oct 78-Sept. 79). The area of the building is approximately 8,000 square meters. The budget of 7 million Bahts is allocated by the Thai Government (from 15 million Bahts) provided for both electronics and computer buildings.

	1978	1979	1980	1981	1982
Construction of building		Building			
Installation of computer system			Equipment		
Operation				Operation	

2.2.5 Equipment

The necessary equipment for fulfiling the objective is as follows:

1. A computer system with data communication capability and with
   a) A sizable CPU memory of minimum 256 Kbytes and expandable.
   b) A line printer and a character printer
   c) Magnetic tape units
   d) Magnetic disk units
   e) Floppy disk units
   f) A card reader unit
   g) Paper-tape reader-puncher units
   h) CRT-keyboard/printer-keyboards,
   i) Languages: FORTRAN, COBOL, ASSEMBLER, BASIC.
2. Data entry equipments, dual type
3. Data stations with CRT display and data communication equipment (with MODEMS) for connection to the computer system described in (1)
4. An off-line digital plotter (from paper tape or magnetic tape)
5. An off-line optical character reader (to magnetic tape or paper tape)
6. Data communication error test equipment
7. ROM writer/eraser
8. Other spare parts and necessary parts for the ystem.

2.2.6 Budgeting with emphasis on the vunning cost

The budget for the running cost will be provided by the Government of Thailand.

2.2.7 Appointment of counter parts

The Thai counterparts in this fields are as follows:

No.	Name	Qualification	Remarks
1	Dr. Kosol Petchsuwan	B.Sc.(Eng.) 1st class Hons., A.C.G.I., D.I.C.,Ph.D.(London)	
2	Mr. Vipan Prijapanij	B.Sc.(Eng.)Hons.,A.C.G.I., M.Sc. (Cantab)	
3	Mr. Chom Kimpan	B.Eng.(KMIT),MSEE(Nihon)	
4	Mr. Prateep Banyatnopparat	B.Eng.(KMIT),M.Eng.(Tokai)	
5	Mr. Kanchit Mitrce	B.Eng.(KMIT),M.Eng.(Tokai)	
6	Mr. Yotin Praempraneerat	B.Eng.(KMIT).,M.Eng.(Nihon)	
7	Miss Jongkol Ngarmwiwit	tB.Eng.(KMIT), M.Eng.(Tokai)	
8	Mr. Kitti Teerasaet	B.Eng.(KMIT),M.Eng.(Tokai)	
9	Mr. Pallop Laocharcon	B.Eng.(KMIT),M.Eng.(Osaka)	
10	Mr. Worawut Suwatanapaukul	B.Eng.(KMIT)	
11	Mr. Bunprasit Maiklad	B.Eng.(KMIT)	
12	Mrs. Pornsuk Taeschareon	B.Eng.(KMIT)	
13	Mr. Paisarn Chaiyalertpongsa	B.Eng.(KMIT), L st class Hons.	
14	Mr. Boonwat Attachoo	B.Eng.(KMIT)	
15	Mr. Vichai Prasertcharconsook	B.Eng. (KMIT)	
16	Miss Sumalee Muangpisal	B.Sc.(Kyoto)	
17	Mr. Ratikorn Varakulsiripan	B.Eng. (Kyoto)	
18	Mr. Boonlert Iampikul	B.Eng. (Australia)	Studing for M.Eng. in Australia
19	Mr. Paisarn Lomthong	B.Eng.(KMIT), 1st class Hons.	Studying for M.Eng. at Dentsu Univ.,Japan
20	Miss Panvadee Limsakul	B.Sc., M.Sc. (Australian)	

Technicians, operators and assistants can be recruited in the coming year.

2.3 Program III - Energy Conversion

2.3.1 Education and training program

Type of Students	Number of Students				Remarks
	1979	1980	1981	1982	
Dept. of Electrical Eng.					
B. Eng. (4th & 5th year)	60	60	60	60	
M.Eng.(Major Electrical Power)	10	10	10	10	
Other Departments					
Postgraduate student					
(M.Eng. With major in other					
topics)	60	60	60	60	
1st Year Students	150	150	150	150	General
2nd Year Students	150	150	150	150	Electrical Eng.
3rd Year Students	150	150	150	150	Electrical Machine
4th Year Students	150	150	150	150	Power System
5th Year Students	150	150	150	150	Energy Conv.

2.3.2 Buildings and facilities

The building for energy conversions had been constructed in the Thai fiscal year 1977 (Oct 76-Sept 77). Now the building is completed with 1,500 square meters averiable area for laborotories and research usages.

	1978	1979	1980	1981	1982
Installation of equipments					
Operation					

2.3.3 Japanese experts

The number of man-month of Japanese experts with in the 4 years of the program is as follows:

a) expert on high voltage engineering 12 man-months

b) expert on electrical machines 12 man-months

c) expert on Power systems 12 m n-months

d) expert on energy conversions 12 man-months

There are 4 experts, one expert for each year of the full 4 years.

The experts shall assist in establishing courses in electrical machines, power systems, energy conversions and also in the initial development and operation of electrical laboratories such as machine and high voltage laboratories.

	1978	1979	1980	1981	1982
1. expert on high voltage engineering					
2. expert on electrical machines					
3. expert on power systems					
4. expert on energy conversions					

2.3.4 Education and training in Japan

It is necessary to arrange further training for Thai staff in Japan in order to gain experiences in research and development work.

They may be then expected as academic leaders in this field for KMIT and, consequently, for Thailand.

Type of training	1978	1979	1980	1981	1982	Total man-month
1. Doctorate degree				36 M/M		36
		24 M/M				24
2. Master degree				24 M/M		24
					24 M/M	24
3. Six-month industrial training		6	6	6	6	24
Total		18	42	42	30	132

2.3.5 Equipment

The necessary equipment for fulfiling the objective is as follows:

1. High voltage testing equipments consist of
   - a. Impulse voltage testing set — 1 set
   - b. Direct voltage testing set — 1 set
   - c. Power frequency Testing set — 1 set
   - d. Tesla transformer — 1 piece
2. Equipments for construction and testing of small and medium size electrical machines consist of.
   - 1. Hydrolic Knock out sets — 2 sets
     (For cutting laminated core of machines or Transformers into desired shapes)
   - 2. Automatic coil winding machines — 2 sets
   - 3. DC. Magnetic hysteresis loop tracer — 1 set
   - 4. Epstein iron loss test set — 1 set
   - 5. Gauss meter — 1 set
   - 6. Photocorders — 2 sets
   - 7. AC.Power calibration system — 1 set
   - 8. DC.Voltage/current calibration set — 1 set
   - 9. DC.Volt data acquis tion system — 1 set
   - 10. Temperature data acquisition system — 1 set
   - 11. Analog computer and logic assembly — 1 set
   - 12. Digital AC.power meter — 2 sets
   - 13 Iwatsu SS-6200 Synchroscope — 2 sets
   - 14 Var meter — 4 sets
   - 15 Pyranometer (for Solar radiation) — 1 set
   - 16 Ancmometer(for wind speed indication) — 1 set
   - 17 Generalised machine test set (for advanced machine experiments) — 1 set
   - 18 Electrical measuring instruments (number of sets shall be adjusted).

2.3.6 Budgeting with emphasis on the running cost

The budget for the running cost will be provided by the Government of Thailand.

2.3.7 Appointment of counterparts

The Thai counterparts in this fields are as follows:

No.	Name	Qualification	Remarks
1	Mr. Nithad Krisnachinda	Cert. in Electromechanics, B.Eng.(KMIT), Advanced Professional Degree in EE (Ohio State Univ.)	
2	Mr. Peerasak Wolasuntarosot	B.E. (UNSW)	Expecting Ph.D. in 1977
3	Mr. Somchet Thiemmuang	Dip. in Telecomm., B.Eng.(KMIT),M.Eng.(Tokai)	
4	Mr. Hok Sae Jew	B.Eng.(KMIT),M.Eng.(tokai)	
5	Mr. Sakarin Suwannukul	B.E., M. Eng.	
6	Mr. Chamnarn Pooripanyawanich	B.E. (Cantaberry)	
7	Mr. Jumpol Kanjanapibul	B.Eng. (KMIT)	
8	Mr. Thongbai Athaset	B.Eng. (KMIT)	
9	Mr. Sulee Banjongjit	Dip.in Electrical Eng., B.Eng. (KMIT)	
10	Miss Wandee Wuthiwat	Dip.in Telecomm., B.Eng.(KMIT)	
11	Mr. Teerasilp Tumawipart	Dip.in Electrical Eng. B.Eng.(KMIT)	

3. Buildings

3.1 Construction Plan

The drawings of the buildings for solid-state, data-processing and energy conversion activities are attached to this report.

3.2 Budget

The operating and maintenance budgets will be responsible by the Thai Government.

3.3 Electricities and Water

The electrical and water supplies will be responsible by KMIT.

The answers are prepared by

Dr. Kosol Petchsuwan

KMIT Ladkrabang

December 1978.

附属資料 4

REPORT ON THE PRELIMINARY SURVEY

1. Japanese Preliminary Survey Team consisting of five members and headed by Mr. Jyunichi Yuuki, Deputy Director of International Cooperation Division, Ministry of Posts and Telecommunication visited Thailand from August 3 to 17, 1978 for the purpose of studying the expansion project of King Mongkut's Institute of Technology (KMIT) in the field of Data-processing, Solid States and Energy Conversion to which the Government of Thailand requested to the Government of Japan for the necessary technical cooperation.

   During its stay, the team discussed various matters on the project with persons concerned of KMIT Department of Technical and Economic Cooperation (DTEC), Office of University Affairs and other authorities as well as collecting necessary data and materials so that the team can obtain full background information and the detail content of the project.

   The member and itenerary of the team are shown in the Annex I and II respectively.

2. The team is very much pleased to observe the remarkably progressive development of KMIT within a short period of time since its initiation in 1961 as the Telecommunication Training Center in Nontaburi.

   The fact that KMIT has been playing important and leading role in Thailand in the Technological education especially in the field of telecommunications convinced the team that the Japanese cooperation to KMIT in the past was timely and effective.

   The team highly appreciate the enthusiastic efforts of those who are concerned without which the successful development could not be attained.

   The high operation rate and the neat maintenance of equipment and facilities donated by Japanese Government shows the efficient absorbuive ability.

3. Considering the present level and limited number of opportunities of education in the relevant field, KMIT authorities concerned is well aware of the need to further expand its facilities and activities in order to meet the increasing demand of Thailand.

The team fully understand and support this expansion project prepared by KMIT.

After discussing and studying various factors involved, the team also considers that the project is quite feasible.

Steady budgetary allocation to KMIT by the Government of Thailand has given good reasons to support the project.

The Team, after return to Japan will analize in detail and the results will be submitted to the Government of Japan for approval of the requested cooperations.

The results and comments of studies on each three sectors of the requested project are as the Annex III.

4. Lastly, the team would like to express its sincere appreciations for the devotive efforts of KMIT and for the warm hospitalities by the Thai authorities concerned extended to the team during its stay in Thailand.

August 16, 1978

Jyunichi Yuuki
Head, Japanese Preliminary
Survey Team for the
King Mongkut's Institute of
Technology Project

Annex I Name list of the Japanese Preliminary Survey Team for the King Mongkut's Institute of Technology

Name	Assignment	Post
Jyunichi Yuuki	Head of the Team	Deputy Director, International Cooperation Division, Minister's Secretariat, Ministry of Post and Telecommunications.
Hajime Yano	Energy Conversion	Professor, Faculty of Engineering, Tokai University
Kokichiro Yasuda	Data Processing	Senior Staff Engineer, Engineering Bureau, Nippon Telegraph and Telephone Public Corporation.
Eisuke Arai	Solid State	Senior Staff Engineer, Musashino Electrical Communication Laboratory, Nippon Telegraph and Telephone Public Corporation.
Kenji Iwaguchi	Technical Cooperation in general and Coordination	Senior Officer, Planning Division, Japan International Cooperation Agency

Annex II Itenerary of the Team

Aug 3, 1978		Arrive in Bangkok
4	9.30	Visit to the Embassy of Japan and JICA Bangkok office
	11.30	Visit to the NTT Bangkok Liaison Office
	15.00	Visit to the DTEC
	16.30	Visit to the KDD Bangkok Liaison Office
5-6		Internal meeting
7-8		Discussions at KMIT (Ladkarbang Campus)
9	7.15	Courtesy call on and discussions with Dr. Prasert Na Nagara, Undersecretary of State Office of State Universitres
	10.30	Observation of the new headquater of KMIT under construction
	11.00	Discussions with the National Computer committee
	14.00	Visit to the computer centre, chulalongkorn University
10	9.30	Visit to Nonthaburi old campus
	10.00	Visit to KMIT North Bangkok campus
	14.00	Visit to KMIT Thonburi campus
11	9.30	Visit to Computer Centre, AIT
	14.00	Visit to the Fraculty of Engineering, Chulalongkorn University.
	16.00	Visit to industries.
12-13		(by group) Internal meeting and preparation of report
14	9.00	(by group) Internal meeting and visit to KMIT
	14.00	Discussion with KMIT
15	9.00	(by group) visit to the relevant industries and other organizations.
	16.00	Visit to the Embassy of Japan and JICA Bangkok office.
16	10.00	Visit to DTEC and others
17	Leave	Bangkok for Tokyo.

Annex III

1. Data Processing Technology

For the purpose of strengthening the function of educating computer engineers and of further promoting the research works, KMIT has been trying to establish the firm basis by increasing the present capacity of computers and introducing new Technologies as tools for it.

With regards the computer utilization plan, KMIT has a plan of computer network among its campuses and with other universities as shown in the attached sheet.

The plan is in conformity with the projected future movement of Technology and is recognized by a number of intelegent people of Thailand since the network can provide opportunities of making use of computer facilities to many other universities.

As KMIT occupies the largiest portion in the field of educating and training of telecommunications in Thailand.

However, judging from the present situation of KMIT, there seems to be many technical matters to be done before reaching this network plan.

From these points of view, it is considered important to think that the present expansion plan should be promoted as a first step to reach the future objectives and by doing so the steady establishment of technology can be attained.

Therefore, the objectives at present stage should be as follows;

1) Strengthening of computer capacity for research works, (for example, expansion of CPU memory capacity, strengthening of peripheral devices)
2) Increase of educational effects by the introduction of new equipment and facility.
3) Promotion of research on data transmission technology.
4) Establishment of basic on - line data processing technology.

Furthermore, since the projected potential needs of computer utilization not only in KMIT but by other universities in the future is very strong.

It is anticipated that the necessity of introducing a larger scale of computer as the next step will arise in the near future.

The availability and utilization of computer power in a wider scope of area and in a speedy manner by combining the computer power as mentioned above and the basis of Technology which will be established under the coming cooperation for the regulated project. Will be the very clever and effective method for making full use of computers in these conditions that there are only limited number of them in Thailand.

Besides, since good quality of Telecommunications circuit is required in order to promote the data communications technology, it is desirable deepening the research activities on the digital - data - transmission technology.

An idea on a Universities Computer Network in Thailand

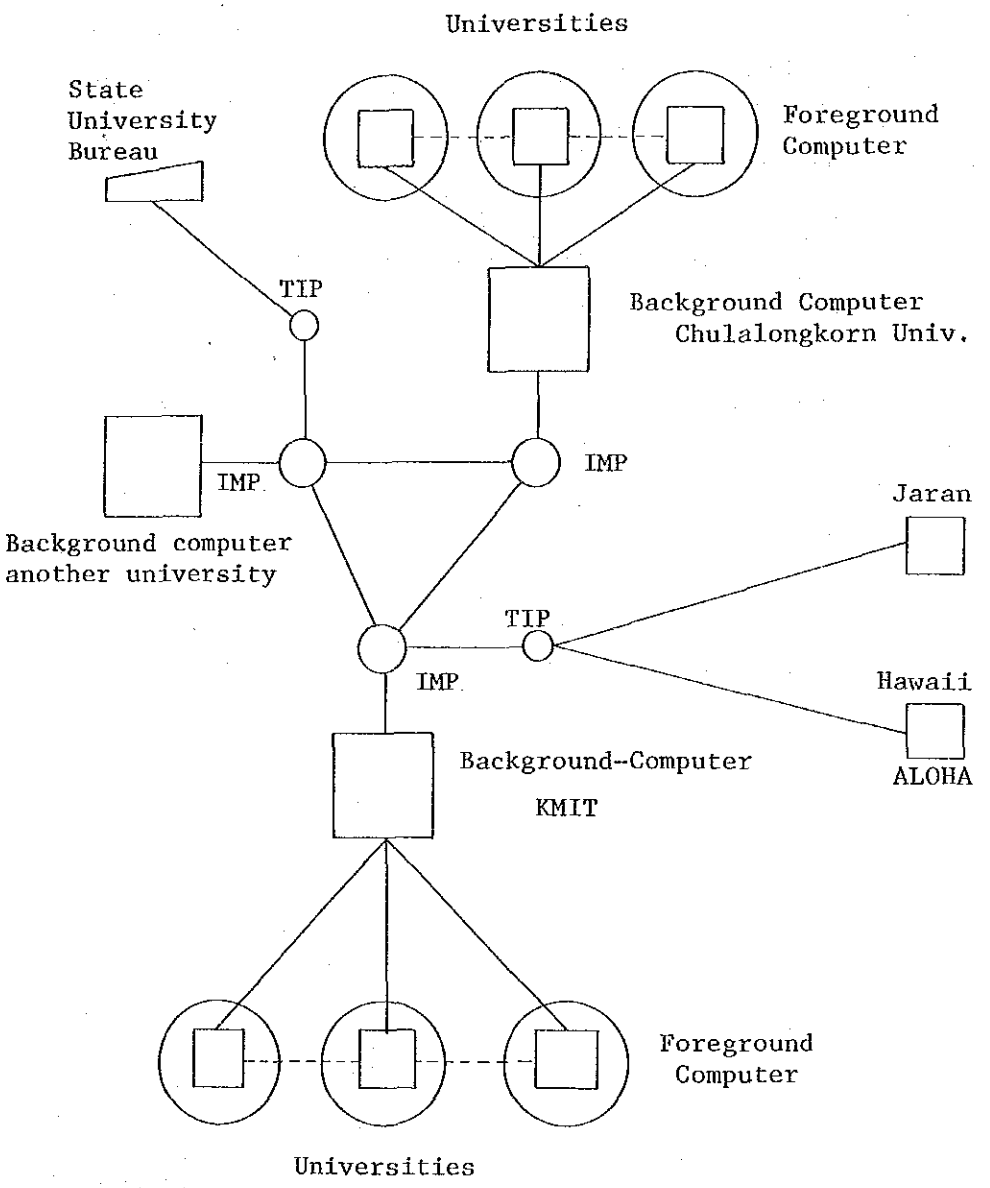

JMP : interface meassage processor

TIP : terminal interface processor

2. Solid State Technology

The team is very much pleased to see that almost all equipments in the electronics laboratory offered by the Japanese Government in 1976 have been maintained in good operating conditions and also used fully for education and research. Especially, it is admirable for the much efforts of KMIT's staffs to improve the facility of equipments, e.g., water purifier system.

The staffs are advancing their ability not only for education but also for reaearch. For instance, many papers concerning to electronics have been published in the international journals in recent years. On addition, they are also making efforts to write textbook in Thai language which will raise the educational level in future.

Considering from a standpoint of new research development, however, they are in great want of fundamental equipments.

They are strong request fundamental equipments such as;

1) Mask making system

They are trying to make masks by themselves. Using the usual cameras, which is considered to be very difficult because of no precision.

2) Various measuring systems

For promotion of research, various measuring systems, which can measure not only electrical characteristics but also physical cones, are necessary because they have only a fewsimple equipments such as curvetracer, and four - point probe.

3) Gas and Water purifier systems

The present water purity is not so good. (for example, resistivity ≃ 20 ~ 30 KΩ/cm) and also they have no gas purifier system. For good control these system are essential.

4) Diffusion furuaces

For better diffusion process control, additional 2-4 tubes are necessary to Separate the predeposition and the drive - in process.

5) Clean Benches

They have no clean room and have only one small clean bench. To maintain more clean environment, 2-3 larger clean benches must be introduced.

6) Sputtering systems and others to advance new materials such as amorphous, poly - silicon and others, sputting systems, deposition systems and so on are necessary.

Observing the situation of KMIT described above briefly, the new project proposed by KMIT is considered to be appropriate to promote their fundamental researches fitting well to the situation of Thailand and also to accomplish their roles as pioneers of solid state technology in Thailand.

3. Energy Conversion

No one doubt that technologies in the field of electric power and machine are basic to the rapid development of any country, as the KMIT request has prescribed.

It is reasonable not only for the spread of electrical communications but for the development of industries that KMIT has offered courses for electrical engineers in 1976.

After surveying, the team should like to point out as follows:

1) Upgrading and training of KMIT's staff, curriculum, selection of text books and scheduling of laboratory works are well arranged by KMIT. But it is regretted that some of laboratory works, contrary to its title, are studied only theoreticaly on paper for lack of equipments.

2) Electrical industries in Thailand are now only assembling machines. It is necessary to cultivate and train engineers for design and construction of electrical power systems and machines.

3) For furnishing electrical power to rural area of Thailand, it is necessary and effective to research and to develop new

energy conversion technologies, utilizing alternating energy resources such as solar energy and wind energy.

4) To proceed above mentioned points

High voltage testing system

Equipments for testing and construction of small and medium size electrical machine are keenly needed.

KMIT is already strongly and actively preparing.

Construction of New building for electrical engineering and energy conversion technology has already completed.

It is necessary and appropriate to assist completing the courses for electrical engineering and energy conversion technology of KMIT, and KMIT has enough capability for these assistances.

附属資料5　KMITノンブリ・ラカバン
校舎の概要

1. 沿　革

1959年(S34) 8月　：訓練センター設立のための調査団派遣、（タイ側との交渉、協議、敷地選定、センタープラン作成等）

1960年(S35) 8月24日：電気通信訓練センターの設置に関する日・タイ政府間協定調印。

1961年(S36) 2月16日：ノンブリ電気通信訓練センター開設、（機材供与：68,320千円、74名入学）（教官NTT7名）（普通科1年、専修科3ヵ月の2コース）

1961年(S36)11月　：池田首相来学。

1962年(S37) 6月　：専門学校（3年制）に昇格（機材供与：1,000千円、50名入学）

1963年(S38) 8月　：技術協定改正（期限3ヵ年が5ヵ年に延長される）ラジオ放送、テレビ部門増設（機材供与：26,440千円）

1964年(S39) 5月　：名称変更、ノンブリ電気通信大学となる。

1964年(S39)12月　：新校舎完成（鉄筋コンクリート4階建）（工費約100,000千円タイ側負担、設計は日本側）

1965年(S40) 5月　：第1回卒業式（38名卒業）

1965年(S40) 8月24日：技術協定終了、以降コロンボ・プラン専門家として派遣は継続、電信、線路部門のみ引継ぎ完了。（専門家数は6名）

1966年(S41) 5月　：第2回卒業式（34名卒業）

1967年(S42) 5月　：第3回卒業式（42名卒業）

1967年(S42) 9月　：佐藤首相来学。

1968年(S43) 7月　：第4回卒業式（28名卒業）

1968年(S43) 8月　：5年制昇格閣議で承認

1968年(S43)10月　：5年制実施のため、線路、電信部門の専門家増強、（専門家数は8名となる）

1969年(S44) 6月　：5年制発足、上級コース設置（4年生入学数44名）

1969年(S44) 8月　：第5回卒業式（35名卒業）

1970年(S45) 7月　：名称変更、モンクット王工科大学ノンブリとなる。本校と同様の性格をもつ2つの専門学校（北バンコック専門学校、トンブリ専門学校）との合併を前提として、5年制のInstitute of Technologyに昇格が決まり、モンクット王工科大学と総称されることになった。

1970年(S45)10月　：米沢日本電信電話公社総裁来学。

1971年(S46) 1月　：ラカバン新敷地（33万坪）決定。

1971年(S46) 3月3日：モンクット王工科大学昇格法案議会通過。

1971年(S46) 5月　：第1回5年制学生卒業（学士34名）

1971年(S46)11月　：JECスカラーシップ発足。

1972年(S47)10月　：菅野国際電信電話株式会社社長来学。

1972年(S47)10月18日：国王臨席のもとに卒業証書授与式挙行（第1回(34名)第2回（29名）卒業生）

1973年(S48) 3月30日：ラカバン新校舎建設のための贈与（163,200千円）に関する第1回交換公文。

1973年(S48)10月18日：国王臨席のもとに第3回卒業生の卒業証書授与式（51名）

1973年(S48)11月　：文部省より総理府国立大学局へ移管。

1974年(S49) 6月28日：ラカバン新校舎建設のための贈与（790,000千円：含機材供与分100,000千円）に関する第2回交換公文。

1974年(S49) 8月14日：ラカバン新校舎建設の地鎮祭挙行。

1974年(S49)10月18日：国王臨席のもとに第4回卒業生の卒業証書授与式挙行（60名）

1975年(S50) 6月　：大学院修士課程（電気工学）発足（15名入学）

1975年(S50)10月18日：国王臨席のもとに第５回卒業生の卒業証書授与式挙行（７１名）

1975年(S50)11月17日：ラカバン新校舎完成し、タイ側に引渡式挙行（講堂図書館、記念館、通信実験研究棟、体育館）

1976年(S51) 2月～3月：新規供与機材類の据付建設工事。

1976年(S51)3月31日～4月14日：日本政府派遣評価調査団来学。

1976年(S51) 6月16日：国王・王妃両陛下臨席のもとに落成記念式典および展示会開催。
日本より羽田郵政政務次官他５名の来賓が式典参列
技術者１０名が派遣され展示会へ協力。

1977年(S52) 1月　：拡充計画に対する協力要請が日本政府に提出される。

1977年(S52) 3月　：国王臨席のもとに第６回卒業式（１３１名）

1977年(S52) 6月　：日・タイ技術協力年次協議により協力要請に対する事前調査の実施を意図表明。

1977年(S52)10月　：ＪＩＣＡ法眼総裁が訪問。

1977年(S52)10月18日：国王臨席のもとに第７回卒業式（１３７名）
同卒業式において東海大松前総長に名誉博士号が与えられる。

1978年(S53) 5月　：日・タイ技術協力年次協議により事前調査の実施が再度確認される。

1978年(S53) 8月　：事前調査団派遣。

タイ政府は、第３次国家経済社会開発５カ年計画において、ＫＭＩＴの学生数を、１９７６年末までに3,８００名（ノンブリ校舎８２０名）に増員することを計画。この目標達成のため、また大学としての真の形態を整えるためには、従来のノンブリ校舎では敷地も狭く、拡張の余地もないため、1971年にバンコックの東方３０㎞のラカバン地区に土地を確保し、移転する計画ができた。同校舎では、１９７５年度の後期（１１月）から授業を行ってい

る。主要な建物等はつぎのとおり。

敷地面積：約1,200,000㎡（約33万坪）

床面積：約1,500㎡

主要建物：本館（6階建、約4,300㎡）

※ 通信実験研究棟（3階建、約2,600㎡）

※ 講　堂（1,600人収容、約2,000㎡）

※ 記念館
※ 図書館
（2階建、約1,600㎡）

※ 体育館（1部2階建、約1,900㎡）

2. 教育施設

(1) ノンブリ校舎

バンコックの北方約10㎞に位置し、開校時より、ラカバン校舎移転時までは全ての訓練・教育がこの校舎で行われた。現在は、テレビ、工業機器等の夜間短期訓練コース（1974年より開始。2年間。テクニシャンディグリーを付与）及び大学院生のため等に使用されている。主要建物等はつぎのとおり。

敷地面積：約4,500㎡

床面積：約3,200㎡

主要建物：本館（4階建）

実習室・教室（平屋）

教室・印刷室（2階建）

ワークショップ・学生会室（2階建）

なお、ラカバン移転前は、隣接の寺院の敷地の一部も借用していたので敷地は約10,000㎡であったが現在は返還されている。

(2) ラカバン校舎

実習棟（1階建2棟、約1,700㎡）

教　室（1階建、約1,000㎡）

食　堂（　〃　約500㎡）

電力工学棟（完成済み）

副学長棟（建設中）

上記建物のうち※印のものは、わが国の無償協力（昭和４８、４９の両年度で総額約９.５億円相当）により完成したもの。また、ラカバン校舎内には、以前より存在していた設計・建築専門学校（現在建築学部）の施設があり校舎、施設の共同利用が行なわれている。更に、ラカバン校舎の隣接地にあった農業カレッジの併合が決定したので、敷地・施設とも更に大きくなっている。

3. 教　　官

１９６１年以後の教官の数は表３－１のとおりである。このうち、わが国から派遣された専門家は表３－２のとおりで、またタイ側教官のうち長期、短期にわが国に受け入れられたものは表３－３のとおりである。

表３－１　教　授　数（資格別）

年＼資格	学士以下	学　士	修　士	博　士	合　計
１９６１	１１	８	１	—	２０
６２	１１	９	３	—	２３
６３	９	１０	３	—	２２
６４	１１	１２	３	—	２６
６５	１３	１２	３	—	２８
６６	１２	１１	４	１	２８
６７	１２	１２	５	１	３０
６８	１１	１３	４	１	２９
６９	１２	１６	３	１	３２
７０	１３	２０	４	１	３８
７１	１５	２５	５	１	４６
７２	１５	３２	７	１	５５
７３	１７	３０	１０	４	６１
７４	１３	４０	１６	６	７５
７５	１１	５１	１３	６	８１
７６	９	６４	１６	９	９８
７７	４	５２	３３	１０	９９

注　日本人専門家を含む

表3－2　派遣専門家

氏　名	担　当	任　　期	所　属
鈴木清次	理事長	昭和35年11月18日～36年 7月17日	NTTPC
長井淳一郎	マイクロ波	〃　～38年 7月30日	〃
新井俊一	搬送電話	〃　～38年11月27日	〃
稲田　豊	電　信	〃　～38年 7月30日	〃
岡田己代次	電　話	〃　～　〃　11日	〃
稲野竜三郎	無　線	〃　～38年12月 3日	〃
深井　保	線　路	〃　～　〃　5日	〃
大島良典	理事長	昭和36年11月17日～40年 8月31日	〃
平島一郎	マイクロ波	昭和38年 7月 1日～40年 7月22日	〃
渡辺恵一	電　話	〃　～　〃　25日	〃
青山愛一	電　信	〃　～40年 8月28日	〃
村松喜八郎	搬送電話	昭和38年11月 4日～　〃　24日	〃
木下一郎	線　路	〃　～　〃　26日	〃
榎本沛元	無　線	〃　～　〃　21日	〃
村松清郎	電　信	昭和38年10月 2日～40年 5月 4日	KDD
米沢　力	ラジオ放送	昭和39年 2月　～40年 9月 9日	NHK
一ノ瀬和泉	TV放送	昭和39年 2月10日～40年 9月10日	〃
岩清水隆男	マイクロ波	昭和40年 6月24日～42年 6月23日	NTTPC
仁平　勝	電　話	〃　～43年 6月23日	〃
中村誠司※	無　線	昭和40年 7月22日～43年 8月21日	MPT
山田稚郎	搬送電話	〃　～42年 7月21日	NTTPC
宇野潤三	TV放送	〃　～　〃	NHK
奥居久義	ラジオ放送	〃　～　〃	〃
石井英光	マイクロ波	昭和42年 6月 7日～45年 6月 6日	NTTPC
稲富抱一	ラジオ放送	〃　30日～　〃　29日	NHK
駒沢由治郎	TV放送	〃　～　〃	〃

松本道夫	搬送電話	昭和42年 6月30日～45年 6月29日	NTTPC
増田敏一	電　話	昭和43年 6月10日～46年 6月 9日	〃
田中真三郎※	無　線	昭和43年 8月 7日～46年 8月 6日	MPT
斉藤　進	線　路	昭和43年10月25日～46年10月24日	NTTPC
大熊光雄	電　信	〃　～　〃	KDD
秦　正次	ラジオ放送	昭和45年 5月30日～46年 7月10日	NHK
田村陽之助	TV放送	〃　～47年 5月29日	〃
曽我正義	搬送電話	〃　～　〃	NTTPC
伊藤雄一	マイクロ波	昭和45年 6月24日～47年10月23日	〃
徳田修造※	無　線	昭和46年10月20日～49年 4月30日	MPT
日隈貞夫	電話及び電信	〃　～49年 5月19日	KDD
榎本博司	コンピューター	*昭和47年 5月 1日～49年 4月30日	NTTPC
飯田達彦	制御工学	〃　20日～49年 5月19日	東海大学
唐崎　靖	放送工学	昭和47年 7月10日～49年 7月 9日	NHK
安藤元紀	伝送工学	〃　～52年 4月15日	NTTPC
辻　誠	無線工学	昭和47年10月13日～49年10月12日	〃
寺本三雄※	電子回路	昭和48年 6月 2日～52年 4月15日	東海大学
中田和男※	コンピューター	昭和49年 4月16日～50年 1月14日	MPT
道広　昌	制御工学	昭和49年 5月 8日～51年 7月31日	東海大学
永山　克	放送工学	昭和49年 6月28日～51年 8月31日	NHK
伊東悠治	コンピューター	昭和50年 3月28日～52年10月15日	NTTPC
久保田浩資	〃	昭和53年 1月17日～(54年 1月16日)	〃

＊ 47年の新学期よりカリキュラムが変更になった。

※ チーフ・アドバイザーを兼務。

MPT　：郵政省

NTTPC：日本電信電話公社

NHK　：日本放送協会

KDD　：国際電信電話株式会社

表3－3　研修員受入れ

(1)　長期受入れ

No.	Name		Subject	Departure	Arrival	Period Year	Degree of Granduation
	Bachelor Program						
1.	Mr. Narong	Hemakorn	Telecommunication Eng.	65.9	68.9	3	B.Eng.(Tokai)
2.	Mr. Manoon	Sukasem	"	65.9	68.9	3	"
3.	Mr. Prakit	Tangtisanont	"	65.9	68.11	3	"
4.	Mr. Tawil	King Tong	"	65.9	68.9	3	"
5.	Mr. Pradit	Vajarapiboon	"	67.9	70.9	3	"
6.	Mr. Apinan	Manyanont	"	67.9	70.9	3	"
7.	Mr. Sompol	Kasalwit	"	67.9	70.9	3	"
8.	Mr. Pallop	Laochareon	"	67.9	70.9	3	"
	Master Program						
1.	Mr. Narong	Hemakorn	Microwave Eng.	70.4	72.4	2	M.Eng.(Tokai)
2.	Mr. Manoon	Sukasem	Data Processing	70.4	72.4	2	"
3.	Mr. Chom	Kimpan	Computer Eng.	70.5	74.5	3	" (Nippon)
4.	Mr. Yotin	Prempra-neeratane	Control Eng.	70.5	74.5	3	" "
⑤	Mr. Pallop	Laochareon	Automatic Control	73.4	76.4	3	M.Eng.(Osaka)
⑥	Mr. Prakit	Tangtisanont	Electronic Circuit	74.4	76.4	2	" (Inst. of Telecom)
7.	Mr. Wiwat	Kiranond	Network Design	72.9	76.6	3½	M.Eng.(Tokai)
8.	Mr. Prateep	Buyatino-paratana	Computer Eng.	72.9	76.6	3½	"
9.	Mr. Danut	Viseskul	Electronic Circuit Design	72.9	76.6	3½	"
10.	Mr. Vicheal	Srisaukarm	Mathematic	72.9	76.4	3½	"
11.	Miss Jongkol	Nganwiwit	Control Eng.	73.9	78.4	3½	"
12.	Mr. Somkiat	Supadej	Applied Electronics	73.9	77.4	3½	"
13.	Mr. Manas	Sangvorasilpa	Transmission Eng.	73.9	77.4	3½	"
14.	Mr. Kulchit	Mitree	T.V.Eng.	73.9	77.4	3½	"
15.	Mr. Sompol	Kosulwit	Electromagnetics	74.4	76.6	2	"
16.	Mr. Achawakit	Ratanakorn	Communication System	74.4	78.4	3	M.Eng.(Tokai)
17.	Mr. Kanok	Jenjirapongvej	Telegraph	74.4	78.4	3	"
18.	Mr. Somjet	Tiemmuang	Electronic Power	74.4	78.4	3	"
19.	Mr. Apinan	Manyanont	Communication System	75.4	77.4	2	M.Eng. Telecom)
20.	Mr. Tawil	Kingtong	Computer Aided Design	75.4	77.4	2	M.Eng.(Tokai)
22.	Mr. Pradit	Vajurapiboon	Integrated Circuit Design	75.4	77.4	2	"
22.	Mr. Kitti	Teeraset	Electrical Mechanics	75.5	78.4	3	"
23.	Mr. Hoke	Saejeu	Industrial Eng.	75.5	78.8	3	"

○印は文部省ベース受入れ

(2) 短 期 受 入 れ

No.	Name		Training Subject	Departure	Arrival	Period month
1.	Mr. Sukon	Nampetch	Telegraph Eng.	1960.11	1961.5	6
				1965.11	1965.5	6
2.	Mr. Suchin	Jamjod	Telephone Eng.	1960.11	1961.5	6
				1970.3	1970.7	4
3.	Mr. Kemtong	Nimsiri	Outside Plant	1960.11	1961.5	6
				1964.11	1965.5	6
				1969.4	1969.7	3
4.	Mr. Boontam	Potipaki	Carrier Tele-phone	1960.11	1961.5	6
5.	Mr. Roong	Potisuwan	Radio & Microwavo	1961.6	1961.12	6
6.	Mr. Vichai	Athinant	TV and Radio	1965.6	1965.12	6
7.	Mr. Prachern	Saichamchan	Radio & TV	1966.6	1966.12	6
8.	Mr. Amporn	Manasprom	Telephone Outside Plant	1971.7	1971.10	3
9.	Mr. Raungsak	Charoenpong	T.V. Eng.	1972.7	1975.10	3
10.	Dr. Kosol	Petchsuwan	Computer Eng.	1973.4	1974.1	3
11.	Mr. Mana	Intrapituwat	Computer Eng.	1973.11	1974.2	4
12.	Miss Pornsook	Ratirojanand	T.V. Eng.	1974.7	1975.10	3
13.	Prof. Vithya	Pienvichitr	Study on Education	1974.10	1974.11	1
14.	Mr. Vichai	Surapat	T.V. Eng.	1975.7	1975.10	3
15.	Dr. Pairat	Tajayapong	Semiconductor Processing	1975.12	1976.2	3
16.	Mr. Yasert	Suksaun	" XB Telephone	1975.12	1976.2	3
17.	Prof. Bhongs-Sakdi Varasuntarosoth		Study on Education	1976.3	1976.4	1
18.	Dr. Wanchai Phochiphichitr		Audio Eng.	1978.7	1978.11	4
19.	Mr. Paisal Buddhavisate		Telecommunicatior (Solid State)	1978.9	1973.12	3

4. 学　　生

１９６１年以来の学生数の変化は、表４－１（在席学生数）のとおりである。これら学生の出身地分布をみると表４－２のとおり、全国各地より集っており、KMITの知名度の高揚に貢献しているといえよう。学生の質についての最近の状況は、表４－３に示されたとおり、工学部を有する国立大学７校への入学共通試験成績では、チュラロンコン大学に次いで二番目（1976年以後）に位置している。

4. 学生数及び出身地

４－１　在 席 学 生 数　　（単位：人）

	テクニシャン	エンジニアー（学 士）	修　士	合　計
１９６１	２３	—	—	２３
１９６２	５０	—	—	５０
１９６３	８５	—	—	８５
１９６４	１１０	—	—	１１０
１９６５	１３５	—	—	１３５
１９６６	１１４	—	—	１１４
１９６７	１５４	—	—	１５４
１９６８	２１５	—	—	２１５
１９６９	３２０	３７	—	３５７
１９７０	３９４	６３	—	４５７
１９７１	４１２	１０３	—	５１５
１９７２	３９９	１３９	—	５３８
１９７３	４８２	１３７	—	６１９
１９７４	４０２	２３８	—	６４０
１９７５	３６１	３２０	２２	７０３
１９７６	３３４	３１２	５２	６９８
１９７７	３６４	２９０	６７	７２１

4－2　学生の出身地

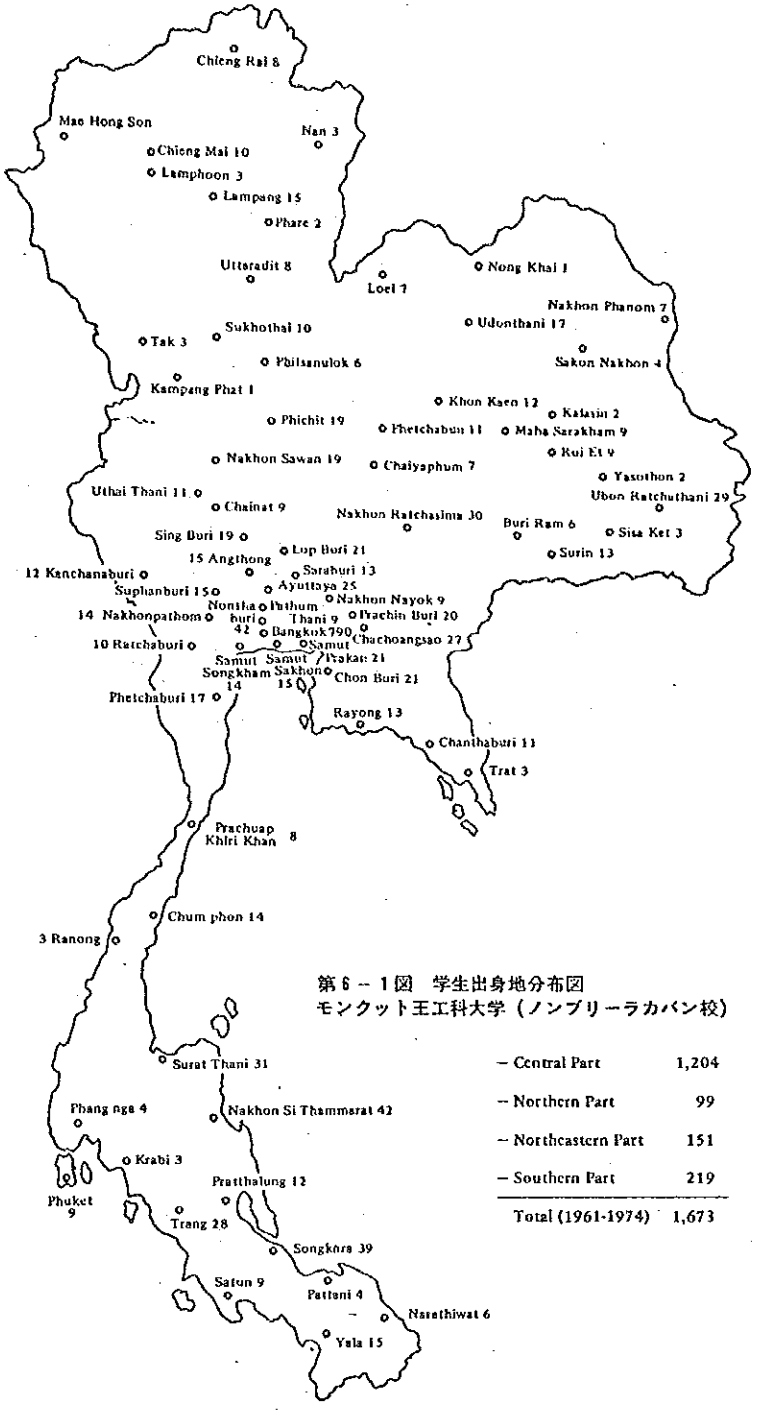

第6－1図　学生出身地分布図
モンクット王工科大学（ノンブリーラカバン校）

－ Central Part	1,204
－ Northern Part	99
－ Northeastern Part	151
－ Southern Part	219
Total (1961-1974)	1,673

表４－３　学生の入学試験成績

Entrance Examination Results of the University Bureau for Engineering Students 1975 — 1977
(An indication of the popularity of the KMIT among high - school students in comparison to other universities)

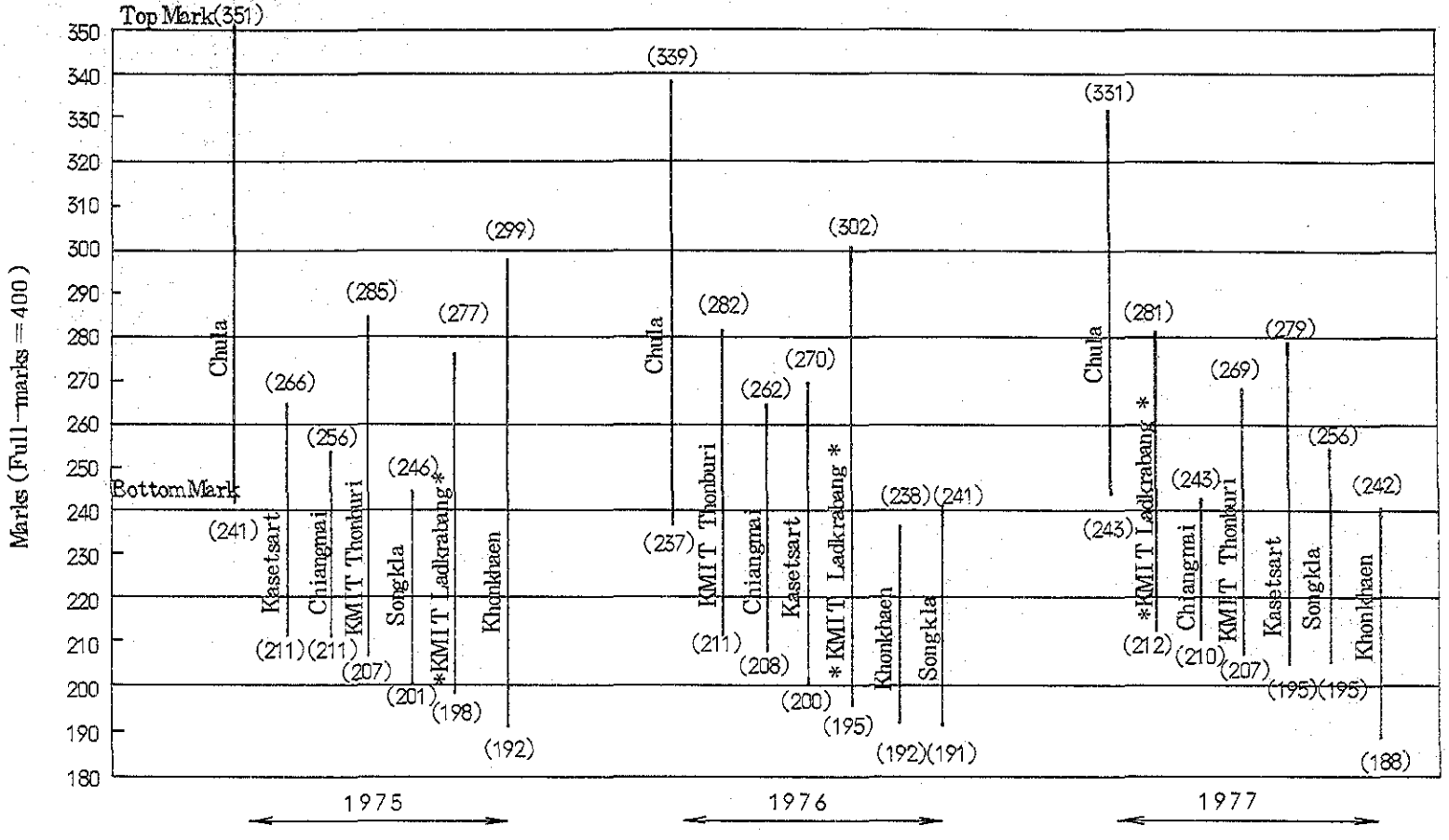

5. 卒業生と就職状況

5－1 卒業生数

（単位：人）

年＼レベル	テクニシャン以下	テクニシャン	エンジニア（学士）	合計
1961	23	—	—	23
1962	30	—	—	30
1963	33	—	—	33
1964	—	38	—	38
1965	—	34	—	34
1966	—	43	—	43
1967	—	33	—	33
1968	—	34	—	34
1969	—	73	—	73
1970	—	79	33	112
1971	—	116	23	139
1972	—	110	56	156
1973	—	114	57	171
1974	—	102	71	173
1975	—	103	131	234
1976	—	92	101	193

5－2 卒業生の就職状況

前記5－1の卒業生数と若干の数字上の差はあるが、KMITの発表した卒業生の就職状況は、表5－2のとおりである。また、最近の卒業生の就職状況についてみると、1977年度（1978年3月卒業）の場合、追跡調査が不十分ではあるも、判明した主たる就職先は表5－3のとおり。

大学局が毎年実施している大学卒業生の就職状況調査によると、KMIT卒業生の就業率は最も高く、表5－4のとおり、1974年度で第1位、1975年度で第2位を占めている。この調査は質問表形式によるサンプリング調査で、KMIT3校舎を合わせた率であり、ラカバン校舎のみについてみれば、もっと高率になると思われる。

表５－２　卒業生の就職状況

（単位：人）

卒業年次（卒業生数）	電話公社	郵電局	政府機関	放送局	教育機関	民間企業	進学	外国留学	その他
3年制卒業生(テクニシャン)									
第1回 1965年3月(38)	13	5	3	6	5	3	0	3	0
2 1966 〃 (34)	9	5	4	0	3	10	10	0	0
3 1967 〃 (42)	11	5	3	0	3	10	10	3	0
4 1968 〃 (33)	0	6	3	0	0	14	5	3	0
5 1969 〃 (30)	1	5	5	0	0	9	9	1	0
6 1970 〃 (71)	4	9	13	0	0	20	21	4	0
7 1971 〃 (101)	13	2	2	0	3	10	71	0	0
8 1972 〃 (90)	15	4	1	0	4	18	39	2	7
9 1973 〃 (101)	5	4	1	0	2	9	51	2	27
10 1974 〃 (145)	0	0	0	0	0	0	130	0	15
11 1975 〃 (140)	0	0	0	0	0	0	130	0	10
5年制卒業生(エンジニア)									
第1回 1971年3月(34)	9	6	8	2	2	5	0	2	0
2 1972 〃 (29)	10	7	1	1	5	0	0	4	1
3 1973 〃 (51)	33	2	0	1	2	9	0	3	1
4 1974 〃 (60)	45	3	0	0	0	8	0	2	1
5 1975 〃 (71)	27	2	6	1	4	19	5	3	4
6 1976 〃 (131)	等政府及び政府機関 65					44	7		15

表５－３　１９７７年度卒業生の就職状況

区　分	企業機関名	人　数
民間企業	Brink Electronics Co, Ltd	4(名)
	Somchai(ソニー)	3
	Kriangpat (Wang Computor)	2
	Elcom Research	2
	G, Simons	3
	General Data	2
	Signetics	2
	タイ矢崎	1
	Universal Telecom Co, Ltd	1
	Hoya Lens	1
	Sanyo	1
	NCR (Kian Nguan Co)	1
	Union Co, Ltd	1
	TV. Channel 3	1
	〃　〃　5	1
	Firestone	1
		(27)
公社・公団	Glass Co, Ltd	1
	Electricity Generating Authority of Thailand (EGAT)	2
		(3)
政　府	海　軍	6
	空　軍	1
	内務省地方行政局	1
	National Research Council	3
	郵電局(ＰＴＤ)	2
	Ottice of Atomic Energy for peace	1
	KMITラカバン	7
	Yala Techmcal College	1
	Siam　〃	1
	Sripatum　〃	1
		(24)
進　学		3
未調査		80
	合　計	137

表５－４　大学庁調査による大学卒業生の就職状況

No.	大　学　名	1974年	1975年
		%	%
1	KMIT	93.62	83.30
2	コンケン大学	80.39	81.12
3	プリンス・ソンクラ大学	73.24	78.29
4	マヒドン大学	70.42	89.16
5	チュラロンコン大学	70.32	70.33
6	カセサート大学	65.37	69.21
7	チェンマイ大学	58.30	65.91
8	タマサート大学	55.31	68.89
9	教育大学	37.06	77.18
10	シリパコーン大学	35.26	67.62
11	ラムカムヘン大学	30.78	42.55
	高就職率学部	医学、工学 教育、工芸	医学、工学 教育、工芸
	中　〃	農学、社会 科学、人文 科学	農学、法律 社会科学
	低　〃	法律、自然 科学	人文科学 自然科学

6. 予　算

最近１０年間のKMITの予算の推移は下記のとおりで、急激な伸びを示している。他の大学に比較してもこの伸び率は特に高い。とりわけ運営予算が順調に確保されている点が注目される。

（百万バーツ）

年	運営予算	投資予算	計
1968	0.97	—	0.97
1969	1.07	—	1.07
1970	1.18	—	1.18
1971	1.43	—	1.43
1972	1.70	6.00	7.70
1973	3.45	0.11	3.56
1974	3.96	8.42	12.38
1975	4.23	3.12	7.35
1976	5.66	7.38	13.04
1977	7.17	5.77	12.94
1978	7.49	2.12	9.61
(1979)	8.59	7.20	15.79

注　運営予算はサラリー、賃金、資材費及び一般管理経費。
　　投資予算は機材費、建設費を含む。

7. 教ケ書とカリキュラム

7－1　教　科　書

タイの大学における教ケ書の普及は極めて立遅れており、ほとんどの場合外国語のテキストが使用され、学生は講義を筆記している状態にある。KMITにおいては、科目別責任制を実施し、日本人専門家を中心に、タイ語による教ケ書の作成するよう努めてきた。当初は、日本人専門家の作成した原稿をタイ側カウンターパートが翻訳し、印刷していたが、最近ではタイ人教官自身により作成されている。この現地語教ケ書作成計画に対してJICAは特別業務費として、昭和49年度1,100千円、昭和50年度に　　千円、昭和52年度に　　千円の協力をした。その結果表

7－1のとおり教ケ書が完成し、有効に活用されている。

表7－1　現地語教ケ書

S. Higuma	(Apinun)	; General Description of Switching System. 39p.
S. Higuma	(Apinun)	; Speech Circuit Network. 66p.
S. Higuma	(Manoon)	; Fundamental of Data Communication. 86p.
S. Higuma	(Manoon)	; Introduction to CPM and PERT. 55p.
S. Higuma	(Manoon)	; Traffic Theory and Queuing Theory. 49p.
S. Higuma	(Tawil)	; Transmission of Information. 65p.
H. Enomoto	(Kosol)	; HITAC 10 8K FORTRAN. 44p.
H. Enomoto	(Kosol)	; HITAC 10 PS-10D DRUM FORTRAN. 77p.
H. Enomoto	(Kosol)	; Assembler. 139p.
S. Higuma	(Manoon)	; Traffic Theory. 24p.
S. Higuma	(Tawil)	; Transmission Engineering of Switching System. 70p.
S. Higuma	(Manoon)	; Land Transmission Plant. 59p.
S. Higuma	(Apinun)	; Boolean Algebra and Logical Circuit. 140p.
M. Tuji	(Naronk)	; Introduction of Radio Transmission Theory. Vol. 1. 77p.
M. Ando	(Tavil)	; Transmission on Telecommunication Line Vol. 1. 72p.
S. Higuma	(Apinun)	; Introduction to The Communication System. 101p.
S. Higuma	(Manoon)	; Echo Suppressor. 109p.
S. Higuma	(Manoon)	; International Signalling System. 75p.
M. Ando	(Tawil)	; Fundamental Telephone Network. 40p.
M. Tsuji	(Naronk)	; Radio Communication Vol. 2. 162p.
S. Higuma	(Manoon)	; Submarine Cable. 58p.
M. IIda & S. Michihiro	(Yochin)	; Automatic Control System. Vol. 1., Vol. 2. 400p.
M. IIda & S. Michihiro	(Yochin)	; Analog Simulation. 59p.
M. IIda & S. Michihiro	(Yochin)	; Simulation Techniques. 150p.
S. Michihiro	(Vipan)	; Industrial Electronics. 200p.
M. Nagayama	(Vichai)	; Television Theory. 200p.
M. Teramoto	(Kosol)	; Material Science.
M. IIda & S. Michihiro	(Yochin)	; Simulation Techniques II. 182p.
S. Michihiro	(Yochin)	; Analog Simulation. (Instruction Note). 66p.
	Sutee	; Transmission Lines and Antennas Vol. 1. 250p.
M. Teramoto.	(Sitichai)	; Electronics Vol. 1., Vol. 2. 300p.

7－2　カリキュラム

ラカバン工学部では、テクニシャン（ディプロマ）、学士、及び修士の資格の取得が可能となるコースが提供されている。

最初の3カ年は、実際的訓練に強く重点を置き、それにより学生はテクニシャンとしての資格を得る。この間には、数学、物理学、エンジニアリング等共通基礎知識が併行的に教授される。

テクニシャンレベル卒業生は希望により、更に2カ年の専攻課程に進学できるが、ほとんどの学生は進学する。この段階では、エンジニアリングと工業技術の2種類の学士コースがある。前者については、更に高度の数学と技術分野に重点を置き、後者については、特定分野、例えばテレビ技術や産業機器に重点を置く。後者については、主として既にテクニシャンとして卒業・就職し何年間かの実際的な技術経験を有する者を再教育することを意図したもの。

修士コースは、高度の知識を有し、優秀な学生を対象に研究指導を目的とするもので、高度のあるいはオリジナルな研究論文に重点を置く。この過程は、最低限2年間である。

工学部におけるカリキュラムは表7－2のとおりである。

FACULTY OF ENGINEERING

First year

(Common for all departments)

Code	Subject	Lecture (hr./wk.)	Practice (hr./wk.)	Credits
	1 st Semester			
12.010	Mathematics I	4	–	4
11.101	Physics I	4	3	5
13.101	Chemistry I	2	3	3
51.101	Engineering Workshop I	–	6	2
51.103	Engineering Drawing I	1	3	2
14.101	English I	3	–	3
1–.––	Elective on Social Science or Humanity	2	–	2
	Total	16	15	21
	2 nd Semester			
12.102	Mathematics II	4	–	4
11.102	Physics II	4	3	5
13.102	Chemistry II	2	3	3
51.102	Engineering Workshop II	–	6	2
51.104	Engineering Drawing II	1	3	2
14.102	EnglishII	3	–	3
1–.––	Elective on Social Science or Humanity	2	–	2
	Total	16	15	21

Electives on Social Science or Humanity for 1 st year:

15.101	Social Laws
15.102	Introduction to Business Administration
15.103	Community Development
16.101	Personal and Community Health
16.102	Library
16.103	Human Relations
16.104	Applied Nuitrition

DIPLOMA OF TECHNOLOGY
IN ELECTRICAL ENGINEERING

Second Year

Code	Subject	Lecture (hr./wk.)	Practice (hr./wk.)	Credits
	1 st Semester			
12.201	Mathematics III	4	–	4
11.201	Physics III	3	–	3
51.231	Engineering Mechanics	3	–	3
51.232	Thermodynamics	3	–	3
54.201	Electrical Engineering I	4	–	4
54.211	Engineering Laboratory I	–	6	2
14.201	Technical English I	2	–	2
	Total	19	6	21
	2 nd Semester			
12.202	Mathematics IV	4	–	4
51.233	Fluid Mechanics	3	–	3
51.234	Mechanics of Solids	3	–	3
53.201	Electrical Engineer.ng II	4	–	4
55.201	Electromagnetics	3	–	3
54.212	Engineering Laboratory II	–	6	2
14.202	Technical English II	2	–	2
	Total	19	6	21
51.200	Summer Training			

DIPLOMA OF TECHNOLOGY
IN ELECTRIACAL ENGINEERING

Third Year

Code	Subject	Lecture (hr./wk.)	Practice (hr./wk.)	Credits
	1 st Semester			
12.301	Mathematics V	3	–	3
53.301	Electrical Machines I	3	3	4
54.301	Network Theory	3	–	3
54.302	Electronic Circuits I	3	3	4
55.301	Cable Communication I	3	2	3
55.302	Radio and Microwave I	3	2	3
	Total	18	10	20
	2 nd Semester			
52.301	Numerical Computations and Programming	2	3	3
53.302	Electrical Machines II	3	3	4
53.303	Lighting and Electrical System Design	3	3	3
54.303	Electronic Circuits II	3	3	4
55.303	Cable Communication II	3	2	3
55.304	Radio and Microwave II	3	2	3
	Total	17	17	20

BACHELOR OF ENGINEERING

in

Telecommunication Engineering
Electronics
Electrical Engineering
Computer and Control Engineering

Fourth Year

Code	Subject	Lecture (hr./wk.)	Practice (hr./wk.)	Credits
	1 st Semester			
12.401	Applied Mathematics I	3	–	3
52.401	Digital Logic Design	3	–	3
52.402	Control Systems I	3	–	3
53.401	Power Systems I	3	–	3
55.401	Communication Systems	3	–	3
52.411	Laboratory I	–	6	2
1–'—	Elective on Social Science or Humanity	2	–	2
	Total	17	6	19
	2 nd Semester			
12.402	Applied Mathematics II	3	–	3
52.412	Laboratory II	–	6	–
5–'—	Engineering Elective	3	–	3
5–'—	Engineering Elective	3	–	3
5–'—	Engineering Elective	3	–	3
5–'—	Engineering Elective	3	–	3
1–'—	Elective on Social Science	2	–	2
	or Humanity	2	–	2
	Total	17	6	19

Electives on social science or humanity for 4 th year

15.401	Civil Laws
16.401	Philosophy
16.402	Psychology
16.401	English Reading
16.402	English Conversation and Discussion
14.411	Japanese I
14.412	Japanese II

Engineering Electives for 4 th year

Department of Telecommunication Engineering:

55.402	Signal Theory
55.403	Electromagnetic Wave Propagation
55.404	Broadcasting Engineering
55.405	Microwave Communications

Department of Electronics:

54.401	Semiconductor Theory
54.402	Semicanductor Devices I
54.403	Electron Tubes

Department of Electrical Engineering:

53.402	Power Systems II
53.404	Generalised Theory of Electrical Machines
53.405	Power Electronics

Department of Computer and Control Engineering:

52.403	Digital Computer Engineering
52.404	Control Systems II
52.405	Industrial Instrumentation I

BACHELOR OF ENGINEERING
in
Telecommunication Engineering
Electronics
Electrical Engineering
Computer and Control Engineering

Fifth Year
1 st Semester

Code	Subject	Lecture (hr./wk.)	Practice (hr./wk.)	Credits
55.511	Project I	–	9	3
16.501	Industrial Economics	3	–	3
5–·––	Engineering Elective	3	–	3
5–·––	Engineering Elective	3	–	3
5–·––	Engineering Elective	3	–	3
	Total	12	9	15

Engineering Electives for 5 th Year, 1 st Semester:

Department of Telecommunication Engineering:

55.501 Statistical Communications
55.502 Television Engineering I
55.503 Telephone and Telegraph Engineering
55.504 Outside - Plant Engineering
55.505 Transmission Engineering

Department of Electronics:

54.501 Solid State Physics I
54.502 Active Network Theory
54.503 Integrated Circuits
54.507 Semiconductor Device II
54.506 Bio-Medical Electronics I

Department of Electrical Engineering:

53.501 Electrical Machine Avalysis
53.502 High Voltage Technology
53.503 Illumination Design

53.504	Electric Drives
53.505	Electrochemical Engineering

Department of Computer and Control Engineering:

52.501	Computer Systems
52.502	Switching Theory
52.503	Analogue Computers and Applications
57.508	Industrial Instrumentation II
52.505	Control Theory

BACHELOR OF ENGINEERING
in
Telecommunication Engineering
Electronics
Electrical Engineering
Computer and Control Engineering
Fifth Year
2nd Semester

Code	Subject	Lecture (hr./wk.)	Practice (hr./wk.)	Credits
55.512	Project II	–	9	3
16.502	Business Administration	3	–	3
5–·—	Engineering Elective	3	–	3
5–·—	Engineering Elective	3	–	3
5–·—	Engineering Elective	3	–	3
	Total	12	9	15

Engineering Electives for 5 th Year, 2 nd Semester

Department of Telecommunication Engineering:
55.506 Antenna Theory
55.507 Telephone Traffic and Planning
55.508 Television Engineering II
55.509 Microwave Theory and Techniques
55.510 Modern Communication Techniques

Department of Electronics:
54.504 Solid State Physics II
54.505 Network Synthesis
54.508 Bio-medical Electronics II

Department of Electrical Engineering:
53.506 Electrical Machine Design
53.507 Linear Electrical Machines
53.508 Switch Gears
53.509 Nuclear Power Engineering

Department of Computer and Control Engineerings:
52.506 Data - Processing
52.507 Computer - Aided Design
52.508 Numerical Control Systems
52.509 Operations Research

表8－1　JECスカラーシップ参加企業　　（単位：バーツ）

No.	企業名	1971	1972	1973	1974	1975	1976	1977
1.	日立セールス（タイ）㈱	6,000	12,000	12,000	12,000	12,000	12,000	12,000
2.	日本電気㈱	6,000	12,000	12,000	12,000	12,000	12,000	12,000
3.	サンヨー電気㈱	6,000	12,000	12,000	12,000	12,000	12,000	12,000
4.	三菱　〃	6,000	12,000	12,000	12,000	12,000	12,000	12,000
5.	松下　〃				12,000	12,000	12,000	12,000
6.	タイ矢崎㈱				10,000	12,000	12,000	12,000
7.	国際電信電話㈱（KDD）					2,000	12,000	12,000
8.	JETRO	(100,000)※			9,098	10,553	10,274	10,569
	計	24,000	48,000	48,000	79,098	84,553	94,274	94,569

※　100,000バーツの寄付金を銀行預金し、その金利を奨学金とするもの

9. 夏期企業内訓練計画

表９－１　夏期企業内訓練計画

No.	企業名	受入れ学生数	
		1977	1978
1	U.E.I（日立）㈱	10	10
2	タイ東芝電気産業㈱	20	16
3	タイ矢崎電線㈱	15	6
4	ナショナル（タイ）㈱	18	15
5	日本電装（タイ）㈱	12	8
6	サンヨー・ユニバーサル電気㈱	8	15
7	Kang Yong 電気製品㈱（三菱）	10	9
8	いすず自動車㈱	—	8
9	マツダ　〃　㈱	—	5
10	鈴木　〃　㈱	—	6
11	トヨタ　〃　㈱	—	8
12	日野　〃　㈱	—	6
13	UDMI（三菱）自動車㈱	—	5
14	タイ・ホンダ㈱	—	6
15	Asia Auto Parts ㈱	—	4
計		93	127

注　訓練期間は１２週間

10. 学 校 行 事

主な学校行事と、１９７８／１９７９年スケジュールはつぎのとおり。

５月上旬	入学試験及び面接試験
６月5,6日	入 学 登 録
６月７日	第一学期（前期）開始
７月中旬	Teachers Respect Day
７月下旬	新入生歓迎会
８月２４日	創立記念日
１０月２日	前期々末試験開始
１０月１３日	第一学期（前期）終了
	―中間休暇―
１１月6,7日	登 録
１１月８日	第二学期（後期）開始
１２月３０日	忘 年 会
２月中旬	卒業研究会発表
３月５日	学年末試験開始
３月１５日	第二学期（後期）終了
	―夏期休暇―
４月１２日	登 録
４月１６日	夏期学期開始
５月２９日	〃 末試験開始
５月３１日	〃 終了

なお、卒業式は１０月１８日のモンクット王生誕記念日に行なわれるのが通常であるが、国王陛下の都合により変更もあり得る。

11 ADMISSION

(1) The Diploma in Technology Courses

To be eligible for admission to a Diploma in Technology Course, a student must have completed the Twelfth Grade (MS 5) of general education, and must pass the university entrance examination arranged by the Ministry of State Universities Bureau.

(2) The Bachelor of Engineering Courses

Candidates for the Bachelor of Engineering Courses must belong to one or more of the following candidate categories:

(a) Students who have spent at least three years attending the Diploma in Technology Courses of the Faculty.

(b) Candidates from other institutes must have qualified for a Diploma in Technology, and must satisfy both written and oral examinations arranged by the Faculty. Only a limited number of candidates can be accepted each year.

(3) The Master of Engineering Courses

Candidates for the Master of Engineering Courses must be graduates with good honour degrees in Engineering, Applied Sciences or Applied Mathematics, and must satisfy an entrance examination arranged by the Faculty.

FEES

Bachelor Degree and Diploma levels:

Course registration fee per credit:		50 Bht
(Maximum 600 Bht for registration over 12 credits and minimum 200 Bht for registration less than 3 credits)		
Library fee :	regular semester	50 Bht
	summer semester	25 Bht

Master Degree level:

Course registration fee per credit:		100 Bht
(Maximum 900 Bht for registration over 12 credits and minimum 300 Bht for registration less than 3 credits)		
Library fee :	regular semester	100 Bht
	summer semester	50 Bht

The following fees are for students at all levels.

Fees to be paid upon registrations :	
Studentship registration (on the first registration only)	100 Bht
Ancillary fee per:	
regular semester	250 Bht
regular semester with registration less than 7 credits	125 Bht
summer semester	125 Bht
Health service fee : regular semester	50 Bht
summer semester	25 Bht
Breakage deposit (refundable)	100 Bht

Other fees:

Extraordinary examination per subject	50 Bht.
Transcript per copy	10 Bht.
Graduation fee for degree	200 Bht.
for diploma	1000 Bht.
Late registration fee	50 Bht.

REGISTRATION

Students are required to register at the Institute within the given period prior to the commencement of classes in each semester. Late registration within a grace period is permitted but a fine must be paid.

Changing of courses can be done within two weeks after classes commence. Withdrawing of courses is permitted within six weeks

GRADING SYSTEM

A report of semester and accumulative grades is recorded under the following system:

A	Excellent	4 grade points per credit hour
B	Good	3 grade points per credit hour
C	Fair	2 grade points per credit hour
D	Pass	1 grade points per credit hour
F	Fail	0 grade points per credit hour
Fa	Fail — insufficient attendance	0 grade points per credit hour
Fe	Fail — absent from examination ...	0 grade points per credit hour
Fw	Fail — late withdrawal	0 grade points per credit hour
W	Withdrawal	
I	Incomplete	
S	Satisfactory	
U	Unsatisfactory	

NOTE:

Withdrawal	is assigned to a student who withdraws from a course within the first six week period.
Incomplete	is given to a student whose work has not been completed because of illness or other unavoidable circumstances. An incomplete grade must be satisfied during the following semester otherwise the grade is automatically changed to F.
Unsatisfactory or Satisfactory	is given to a student in a course for which a grade point is not assigned in the curriculum, but such a course must be completed with a Satisfactory grade in order to graduate.

ACADEMIC STANDARDS

Bachelor and Diploma levels:

1. Students are required to take at least 12 credits in each semester, except the third year or the fifth year students whose remaining courses in the semester total less than 12 credits.
2. A student who has a cumulative index below 1.00 will be dismissed from the Institute.
3. A student whose cumulative index fells below 2.00 shall be placed on probation. If his semester index in lower than 2.00 during the period of probation, he shall be dismissed from the Institute.
4. For each subject of study in a semester, a minimum attendance of 80 per cent is required otherwise a student will not be permitted to take the final examination and will be given an Fa grade.
5. For graduation a student must have passed all courses of the chosen curriculum with a cumulative index of not less than 2.00.
6. If a student has completed all the prescribed courses but fails to attain the required cumulative index of 2.00, he shall be permitted to continue up to a maximum of two semesters to raise his index by retaking courses previously completed with grade D, and/or by taking other courses approved by the Institute. If he, after two extra-semesters, fails to reach the minimum cumulative index of 2.00 he shall not be allowed to continue his study in the Institute.
7. A student who has never failed in any subject and has a cumulative index of not less than 3.00 will be awarded the Bachelor of Engineering Degree with Second Class Honours. If the cumulative index is 3.50 or higher he will be awarded the Bachelor of Engineering Degree with First Class Honours.

Master of Engineering:

1. For each subject of study in a semester, a minimum attendance of 80 percent is required, otherwise a student will not be permitted to take the final examination.

2. To complete the course

(i) a student must have passed all courses of the chosen curriculum with a cumulative index of not less than 3.00.

(ii) a student must have obtained not less than grade C or S in each subject, otherwise he has to restudy that subject.

(iii) a student must have obtained grade S for the thesis.

3. A student who has a cumulative index below 2.50 will be dismissed.

4. A student whose cumulative index falls below 3.00 shall be placed on probation. If his cumulative index is lower than 3.00 during the period of probation, he shall be dismissed.

ADVISORS

Each student shall have member of the teaching staff as his advisor who will give advice and assistance on any matter concerning academic and personal problems.

SCHOLARSHIPS

A large number of scholarships donated by various organizations are available to students with financial difficulties. The Faculty also exempts course registration fee to approximately 10 percent of to total number of students each year.

12. 日本人専門家の受入れ予算

日本人専門家の受入れに係るタイ側予算は前述6.の運営費とは別に、総理府技術経済協力局（Department of Technical and Economic Cooper-ration, DTEC）を通じ確保される。その枠は年度により若干変更はあるが、専門家1名につきおよそつぎのとおりである。

住　宅　費	48,000バーツ（月4,000バーツ）
タイピスト傭上費（2専門家につき1名程度）	約12,000バーツ
運転手手当	14,400 〃
車輌修理費	3,000 〃
燃料（ガソリン）費	7,200 〃
車輌材料費	1,000 〃
計	85,600 〃

ＤＴＥＣでは、コロンボ・プラン課が日本人専門家に係る事項を担当しており、７８年の場合、受入れ予算は全体で５００万バーツである。なお、公務上の国内旅行を必要とする場合も一定の限度内において支給される。

上記とは別に、専門家の赴任時に必要な車輌、電気製品（クーラー、冷蔵庫等）の購入に伴う税金もＤＴＥＣより支給される。

JICA