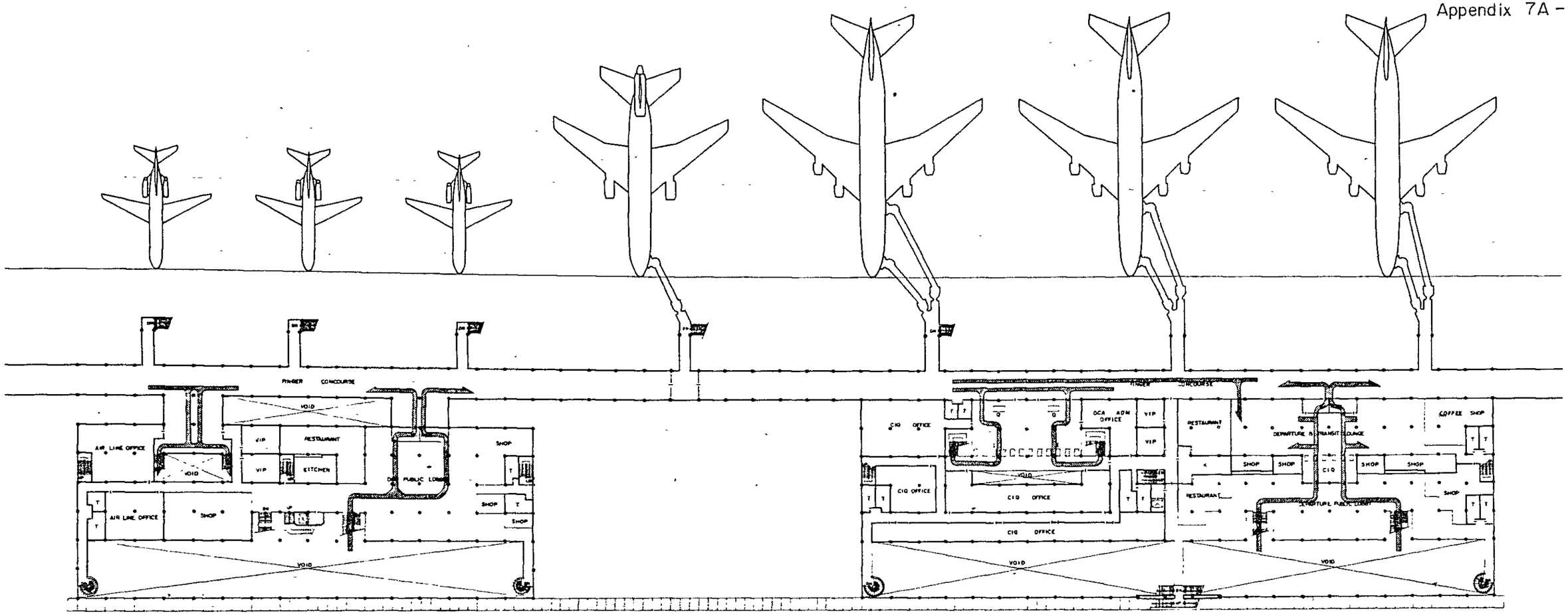

DOMESTIC PASSENGER TERMINAL BUILDING

INTERNATIONAL PASSENGER TERMINAL BUILDING

DEPARTING	PASSENGER
ARRIVING	PASSENGER
DEPARTING	BAGGAGE
ARRIVING	BAGGAGE

N

0 25 50 75 100 125 150 FT

SOCIALIST REPUBLIC
OF
THE UNION OF BURMA

RANGOON INTERNATIONAL AIRPORT DEVELOPMENT PROJECT

PASSENGER & BAGGAGE TRAFFIC FLOW
1 ST FLOOR PLAN PHASE II

MAR 1980

28

FEASIBILITY STUDY

JAPAN INTERNATIONAL COOPERATION AGENCY

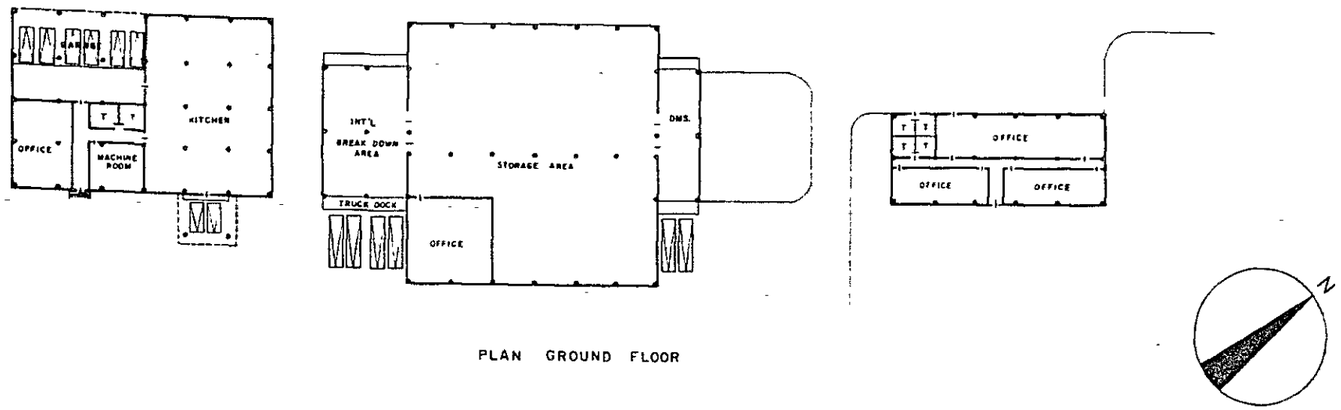

PLAN GROUND FLOOR

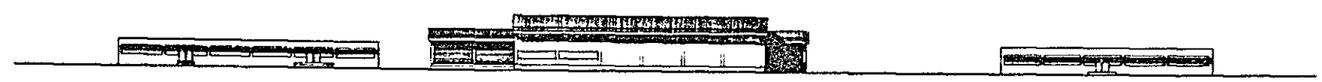

ELEVATION

SECTION

CATERING BUILDING

INTERNATIONAL & DOMESTIC CARGO BUILDING

GSE BUILDING

0 25 50 75 100 125 150FT

SOCIALIST REPUBLIC OF THE UNION OF BURMA	
RANGOON INTERNATIONAL AIRPORT DEVELOPMENT PROJECT	
INTERNATIONAL & DOMESTIC CARGO BUILDING, GSE. & CATERING BUILDINGS	MAR 1980
FEASIBILITY STUDY	29
JAPAN INTERNATIONAL COOPERATION AGENCY	

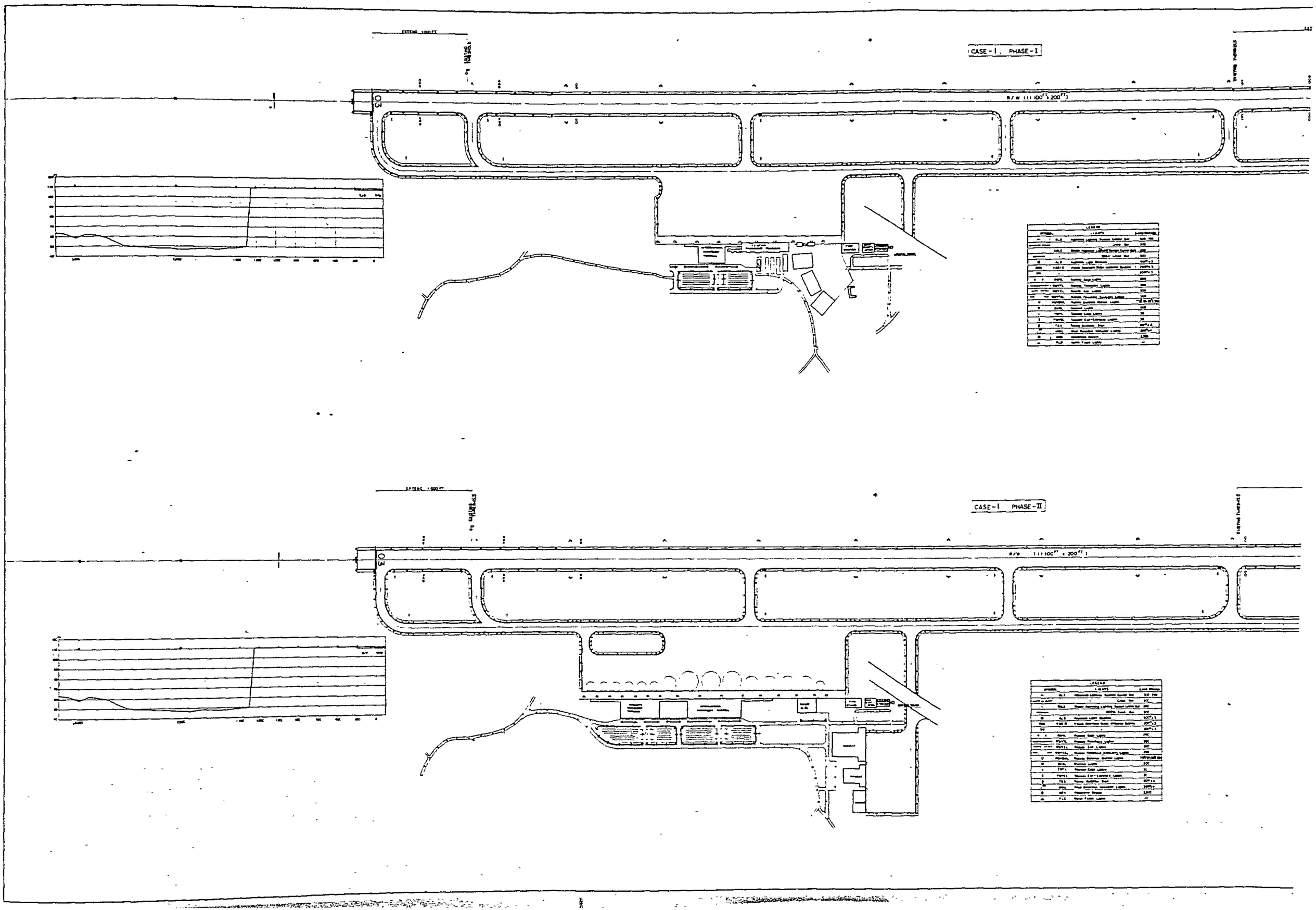
CASE - I , PHASE - I
CASE - I PHASE - II

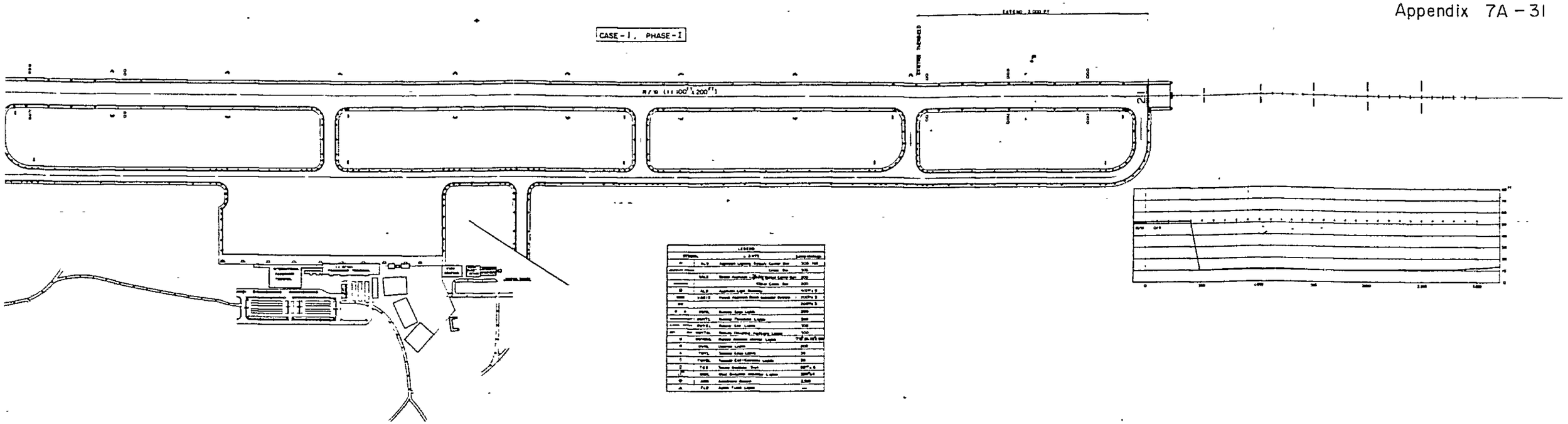

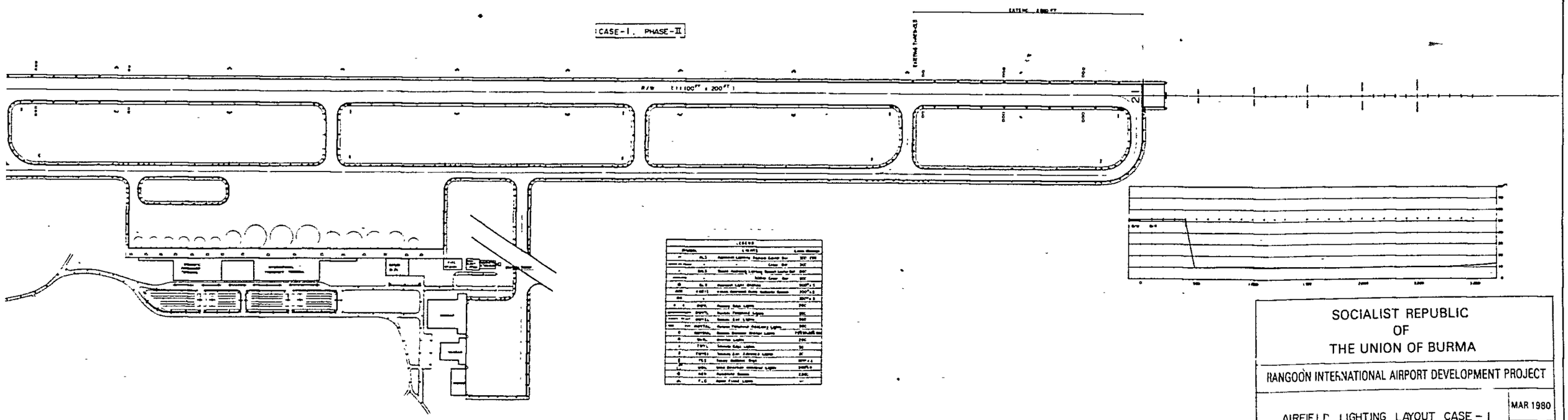

SOCIALIST REPUBLIC
OF
THE UNION OF BURMA

RANGOON INTERNATIONAL AIRPORT DEVELOPMENT PROJECT

AIRFIELD LIGHTING LAYOUT CASE – I

MAR 1980

30

FEASIBILITY STUDY

JAPAN INTERNATIONAL COOPERATION AGENCY

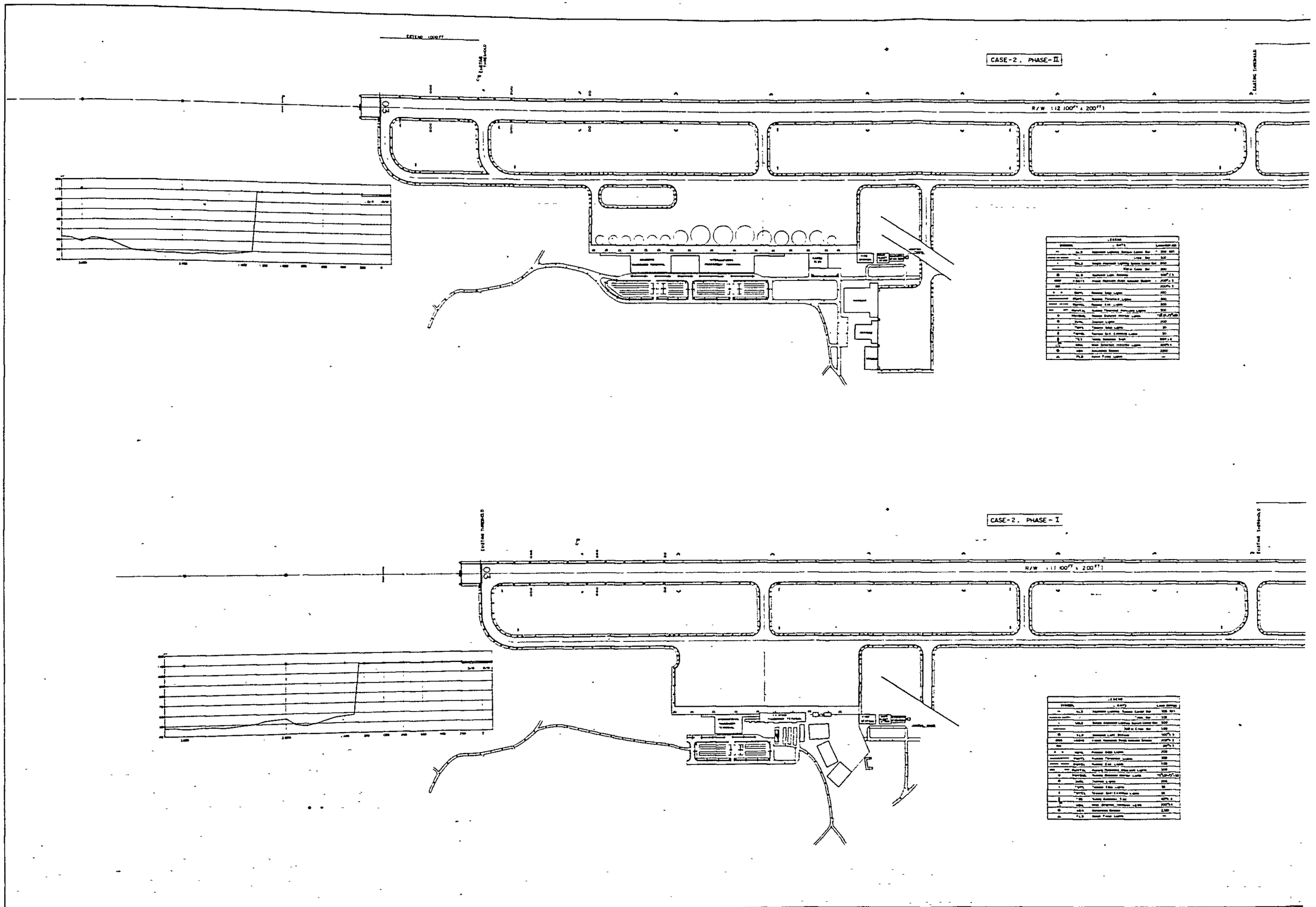
CASE-2. PHASE-II
EXTEND 1000 FT
EXISTING THRESHOLD
R/W SIZE 100FT x 200FT
03
LEGEND
CASE-2. PHASE-I
EXISTING THRESHOLD
R/W SIZE 100FT x 200FT
03
LEGEND

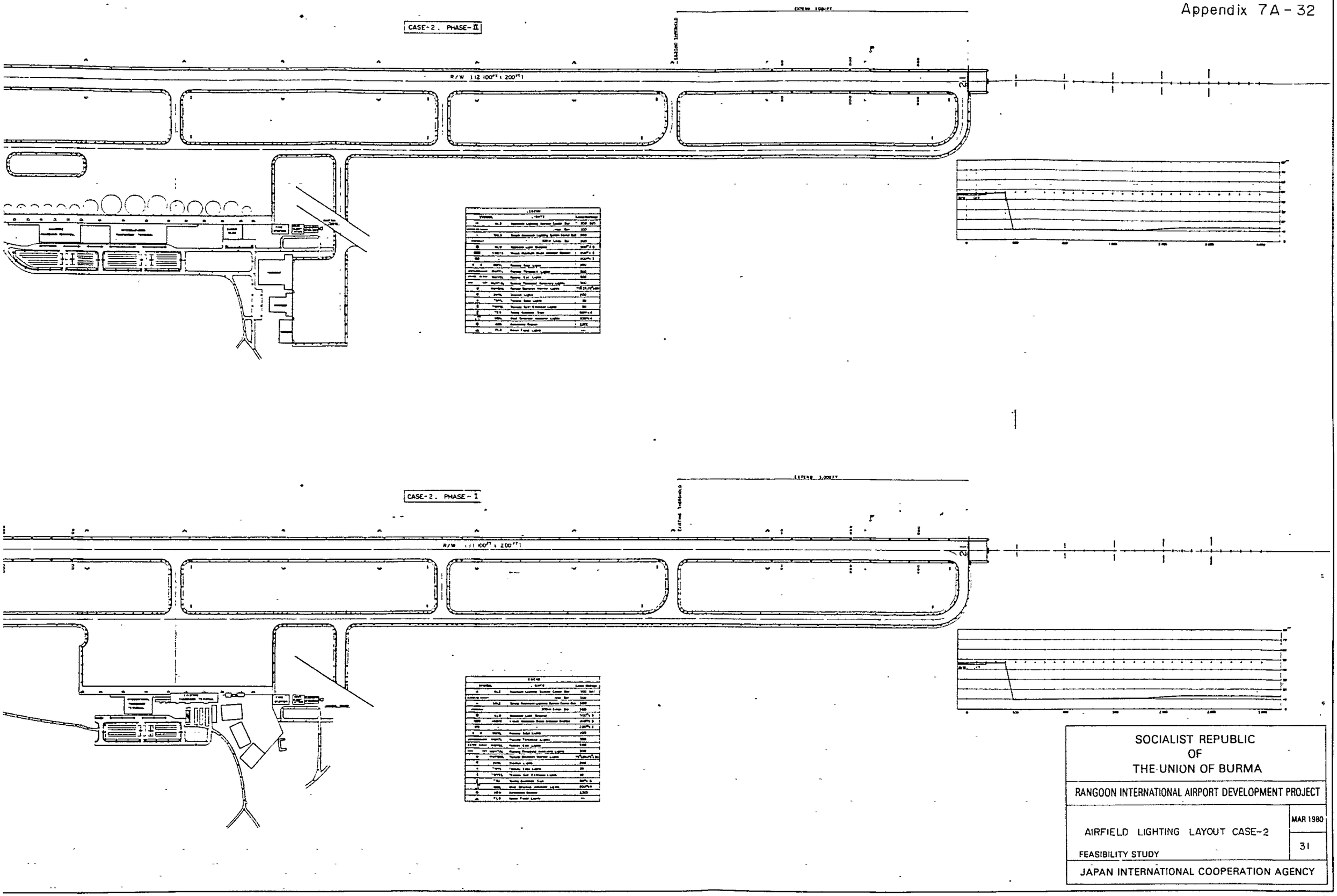
CASE-2. PHASE-II
R/W 112,100FT x 200FT
CASE-2. PHASE-I
R/W 111,100FT x 200FT
SOCIALIST REPUBLIC
OF
THE UNION OF BURMA
RANGOON INTERNATIONAL AIRPORT DEVELOPMENT PROJECT
AIRFIELD LIGHTING LAYOUT CASE-2
MAR 1980
31
FEASIBILITY STUDY
JAPAN INTERNATIONAL COOPERATION AGENCY

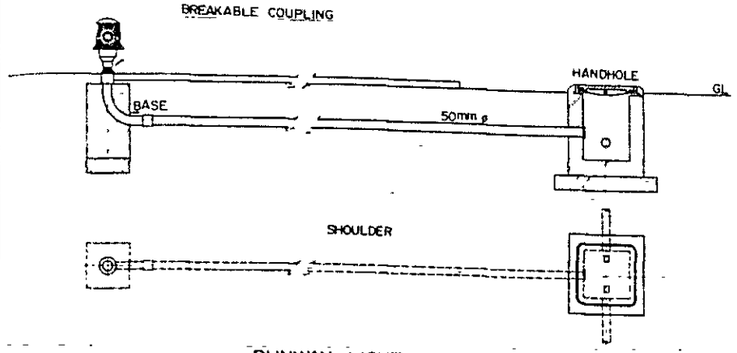

RUNWAY LIGHT

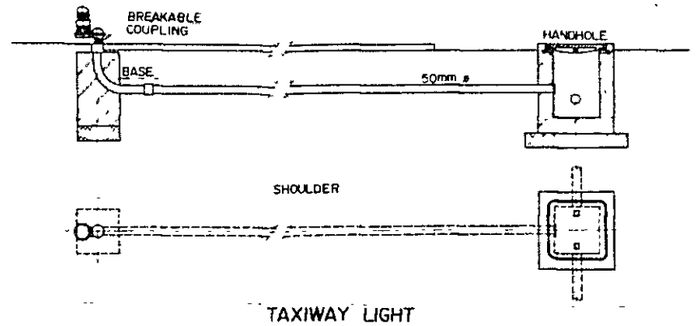

TAXIWAY LIGHT

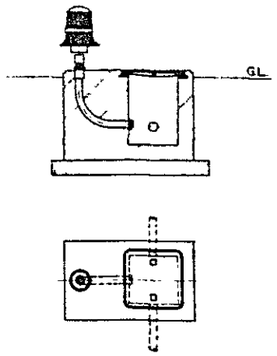

OVER RUNWAY LIGHT

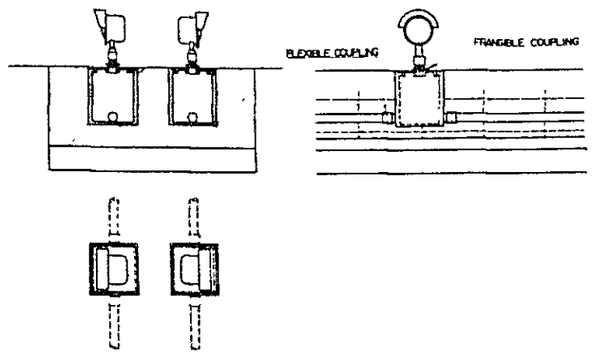

THRESHOLD LIGHT AND RUNWAY END LIGHT

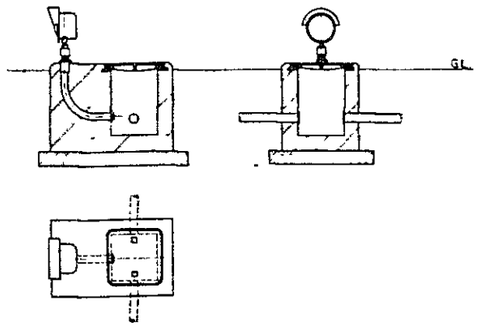

APPROACH LIGHT

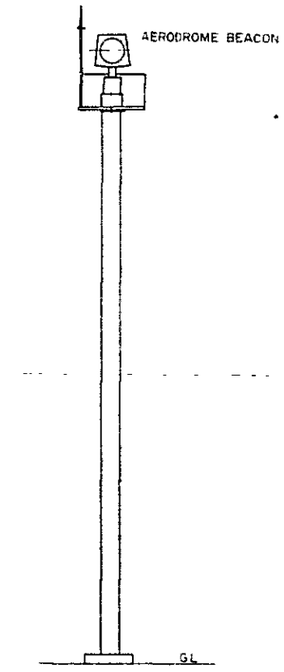

AERODROME BEACON

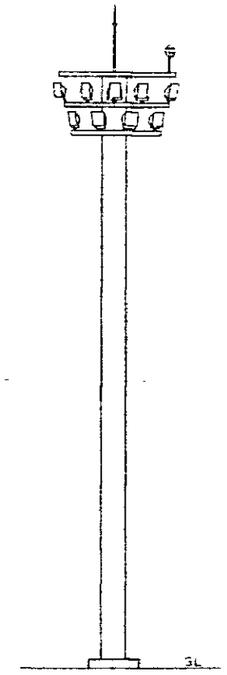

APRON FLOODLIGHT

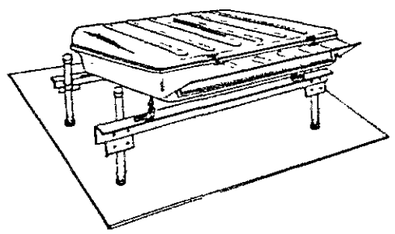

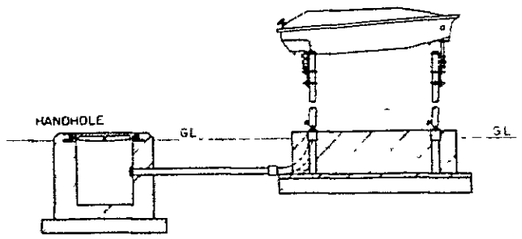

VISUAL APPROACH SLOPE INDICATOR

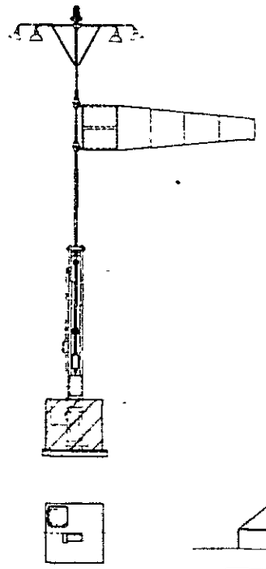

WIND DIRECTIONAL INDICATOR

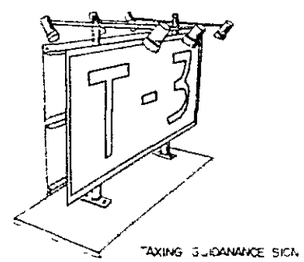

TAXING GUIDANANCE SIGN

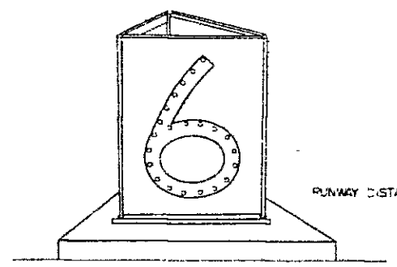

RUNWAY DISTANCE MAKER LIGHT

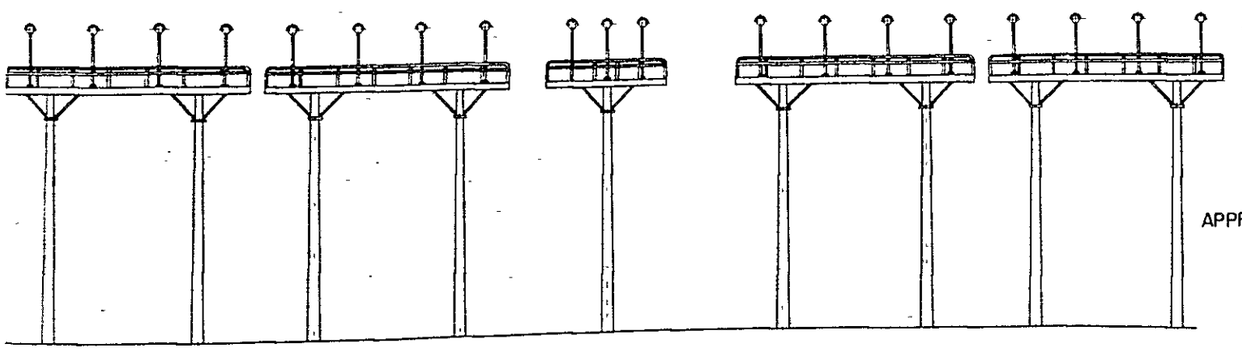

APPROACH LIGHT

SOCIALIST REPUBLIC OF THE UNION OF BURMA
RANGOON INTERNATIONAL AIRPORT DEVELOPMENT PROJECT
INSTALLATION CONCEPT - I — MAR 1980
FEASIBILITY STUDY — 32
JAPAN INTERNATIONAL COOPERATION AGENCY

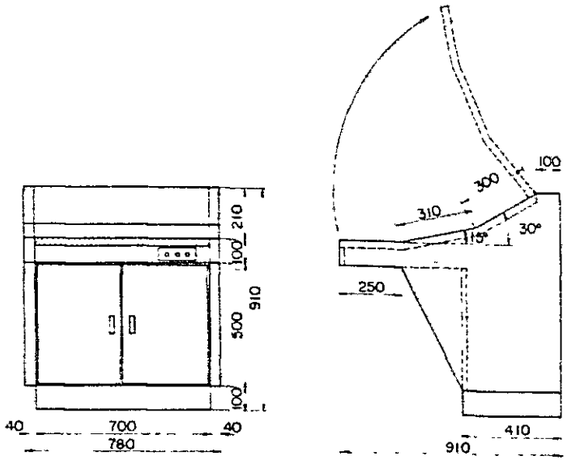

REMOTE CONTROL DESK (TOWER)

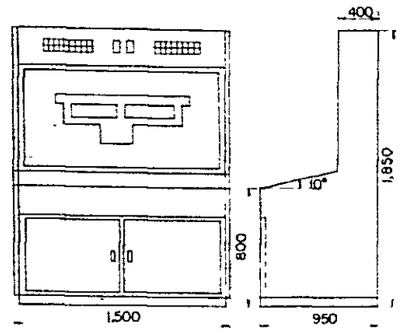

LIGHTING MONITOR

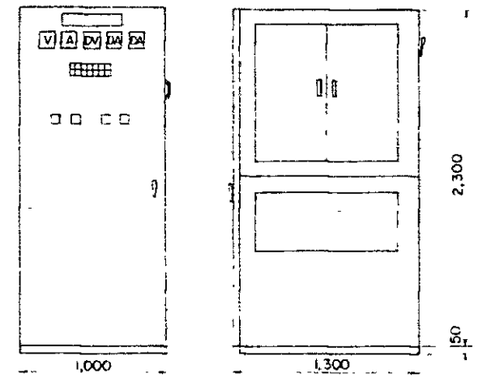

D·C POWER SOURCE BOARD

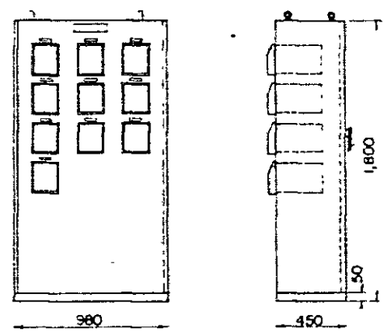

RECORDING AMMETER BOARD

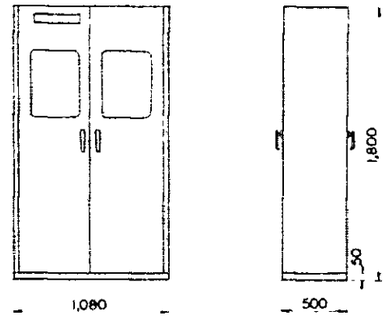

RELAY BOARD

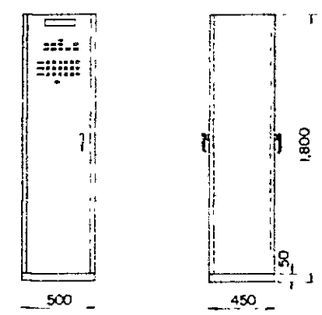

LOGICAL CONTROL BOARD

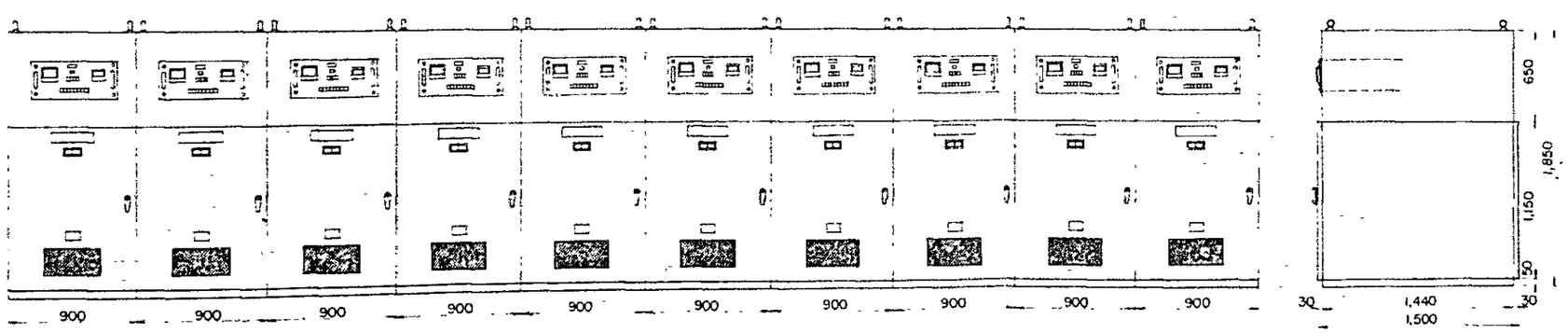

CONSTANT CURRENT REGURATOR

SOCIALIST REPUBLIC OF THE UNION OF BURMA	
RANGOON INTERNATIONAL AIRPORT DEVELOPMENT PROJECT	
INSTALLATION CONCEPT-2	MAR 1980
FEASIBILITY STUDY	33
JAPAN INTERNATIONAL COOPERATION AGENCY	

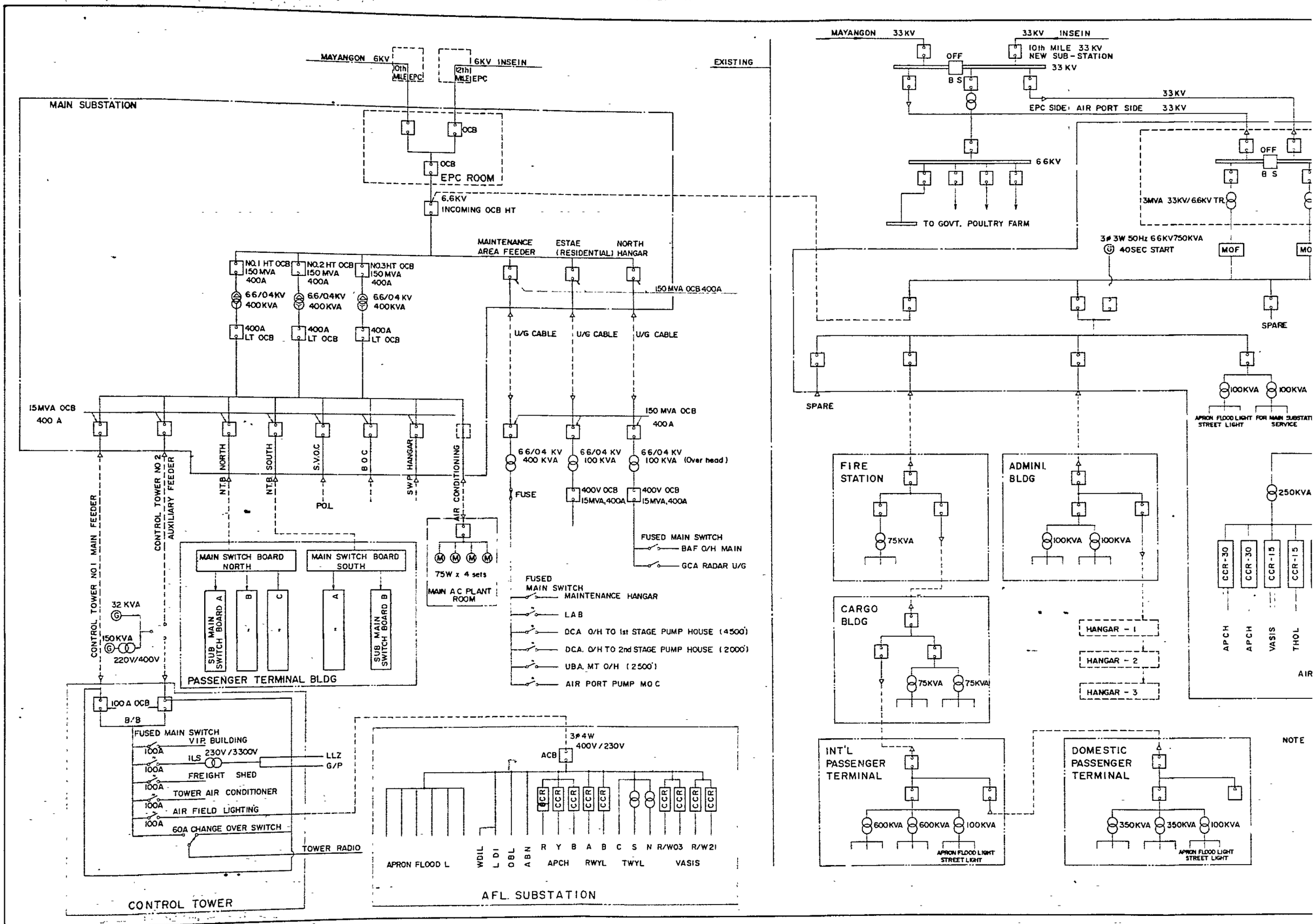
MAYANGON 6KV
10th MILE EPC
6KV INSEIN
12th MILE EPC
EXISTING
MAIN SUBSTATION
OCB
OCB
EPC ROOM
6.6KV
INCOMING OCB HT
MAINTENANCE AREA FEEDER
ESTAE (RESIDENTIAL)
NORTH HANGAR
NO.1 HT OCB 150 MVA 400A
NO.2 HT OCB 150 MVA 400A
NO.3 HT OCB 150 MVA 400A
6.6/0.4KV 400KVA
400A LT OCB
150 MVA OCB 400A
U/G CABLE
15MVA OCB 400 A
150 MVA OCB 400A
NORTH
SOUTH
S.V.O.C
B.O.C
SWP HANGAR
AIR CONDITIONING
NT.B
POL
6.6/0.4 KV 400 KVA
6.6/0.4 KV 100 KVA
6.6/0.4 KV 100 KVA (Over head)
FUSE
400V OCB 15MVA,400A
FUSED MAIN SWITCH
BAF O/H MAIN
GCA RADAR U/G
CONTROL TOWER NO.1 MAIN FEEDER
CONTROL TOWER NO.2 AUXILIARY FEEDER
MAIN SWITCH BOARD NORTH
MAIN SWITCH BOARD SOUTH
75W x 4 sets
MAIN A.C PLANT ROOM
FUSED MAIN SWITCH
MAINTENANCE HANGAR
LAB
DCA O/H TO 1st STAGE PUMP HOUSE (4500')
DCA. O/H TO 2nd STAGE PUMP HOUSE (2000')
UBA. MT O/H (2500')
AIR PORT PUMP MO C
32 KVA
150KVA
220V/400V
SUB MAIN SWITCH BOARD A
SUB MAIN SWITCH BOARD B
PASSENGER TERMINAL BLDG
100 A OCB
B/B
FUSED MAIN SWITCH
V.I.P. BUILDING
ILS
230V/3300V
LLZ
G/P
FREIGHT SHED
TOWER AIR CONDITIONER
AIR FIELD LIGHTING
60A CHANGE OVER SWITCH
TOWER RADIO
CONTROL TOWER
3φ4W 400V/230V
ACB
APRON FLOOD L
WDIL
L DI
OBL
ABN
R Y B A B C S N R/W03 R/W21
APCH
RWYL
TWYL
VASIS
AFL. SUBSTATION
MAYANGON 33KV
33KV INSEIN
10th MILE 33 KV NEW SUB-STATION
OFF
B S
33 KV
EPC SIDE
AIR PORT SIDE
6.6KV
TO GOVT. POULTRY FARM
3MVA 33KV/6.6KV TR.
3φ 3W 50Hz 6.6KV 750KVA
40SEC START
MOF
SPARE
100KVA
APRON FLOOD LIGHT STREET LIGHT
FOR MAIN SUBSTATI SERVICE
250KVA
CCR-30
CCR-15
APCH
VASIS
THOL
AIR
FIRE STATION
75KVA
ADMINI. BLDG
100KVA
CARGO BLDG
75KVA
HANGAR - 1
HANGAR - 2
HANGAR - 3
INT'L PASSENGER TERMINAL
600KVA
100KVA
DOMESTIC PASSENGER TERMINAL
350KVA
NOTE

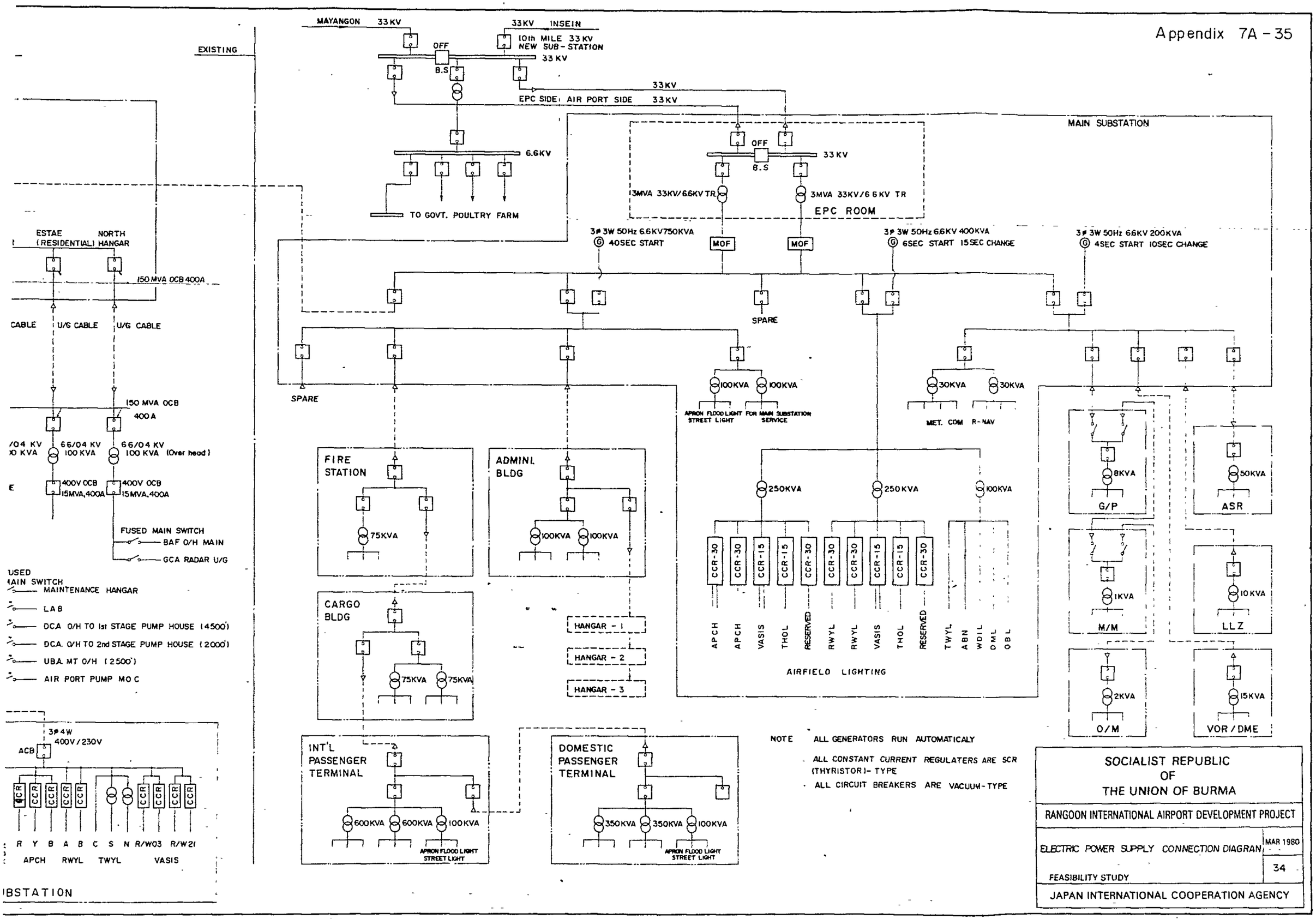
MAYANGON 33 KV
33KV INSEIN
10th MILE 33 KV NEW SUB-STATION
OFF
B.S
33 KV
EXISTING
33KV
EPC SIDE, AIR PORT SIDE 33KV
MAIN SUBSTATION
6.6KV
TO GOVT. POULTRY FARM
OFF
33 KV
B.S
3MVA 33KV/6.6KV TR
3MVA 33KV/6.6KV TR
EPC ROOM
ESTAE (RESIDENTIAL)
NORTH HANGAR
150 MVA OCB 400A
CABLE
U/G CABLE
U/G CABLE
150 MVA OCB
400 A
/04 KV
66/04 KV
100 KVA
66/04 KV
100 KVA (Over head)
400V OCB
15MVA,400A
400V OCB
15MVA,400A
FUSED MAIN SWITCH
BAF O/H MAIN
GCA RADAR U/G
USED
MAIN SWITCH
MAINTENANCE HANGAR
LAB
DCA O/H TO 1st STAGE PUMP HOUSE (4500')
DCA. O/H TO 2nd STAGE PUMP HOUSE (2000')
UBA MT O/H (2500')
AIR PORT PUMP MO C
3φ 3W 50Hz 6.6KV 750KVA
40SEC START
MOF
MOF
3φ 3W 50Hz 6.6KV 400KVA
6SEC START 15SEC CHANGE
3φ 3W 50Hz 6.6KV 200KVA
4SEC START 10SEC CHANGE
SPARE
SPARE
100KVA
100KVA
APRON FLOOD LIGHT STREET LIGHT
FOR MAIN SUBSTATION SERVICE
30KVA
30KVA
MET. COM
R-NAV
FIRE STATION
75KVA
ADMINL BLDG
100KVA
100KVA
250KVA
250KVA
100KVA
CCR-30
CCR-30
CCR-15
CCR-15
CCR-30
CCR-30
CCR-30
CCR-15
CCR-15
CCR-30
APCH
APCH
VASIS
THOL
RESERVED
RWYL
RWYL
VASIS
THOL
RESERVED
TWYL
ABN
WDIL
DML
OBL
AIRFIELD LIGHTING
8KVA
G/P
50KVA
ASR
1KVA
M/M
10KVA
LLZ
2KVA
O/M
15KVA
VOR/DME
CARGO BLDG
75KVA
75KVA
HANGAR - 1
HANGAR - 2
HANGAR - 3
3φ4W
400V/230V
ACB
CCR
R Y B A B C S N R/W03 R/W21
APCH RWYL TWYL VASIS
IBSTATION
INT'L PASSENGER TERMINAL
600KVA
600KVA
100KVA
APRON FLOOD LIGHT STREET LIGHT
DOMESTIC PASSENGER TERMINAL
350KVA
350KVA
100KVA
APRON FLOOD LIGHT STREET LIGHT
NOTE ALL GENERATORS RUN AUTOMATICALY
ALL CONSTANT CURRENT REGULATERS ARE SCR (THYRISTOR)- TYPE
ALL CIRCUIT BREAKERS ARE VACUUM-TYPE
SOCIALIST REPUBLIC OF THE UNION OF BURMA
RANGOON INTERNATIONAL AIRPORT DEVELOPMENT PROJECT
ELECTRIC POWER SUPPLY CONNECTION DIAGRAM
MAR 1980
FEASIBILITY STUDY
34
JAPAN INTERNATIONAL COOPERATION AGENCY

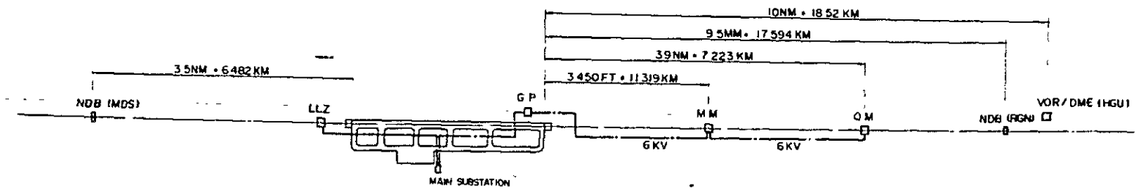

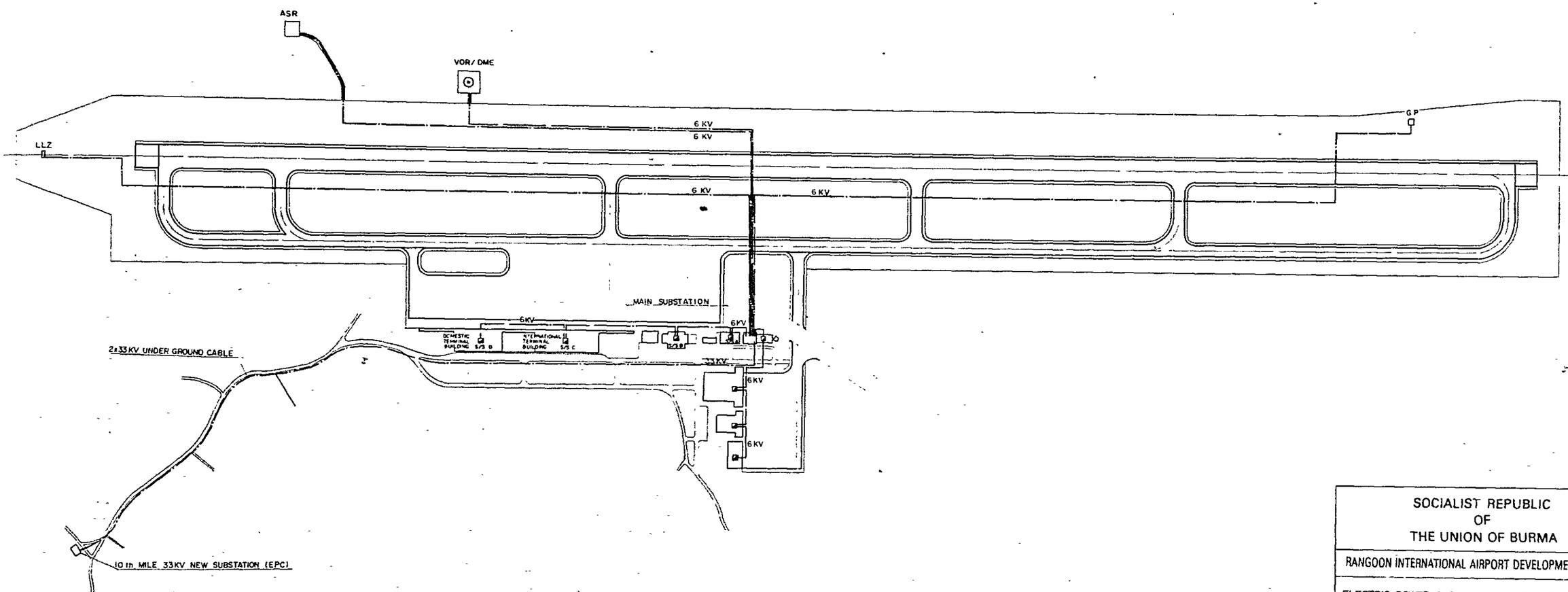

SOCIALIST REPUBLIC OF THE UNION OF BURMA	
RANGOON INTERNATIONAL AIRPORT DEVELOPMENT PROJECT	
ELECTRIC POWER SUPPLY DISTRIBUTION SYSTEM	MAR 1980
FEASIBILITY STUDY	35
JAPAN INTERNATIONAL COOPERATION AGENCY	

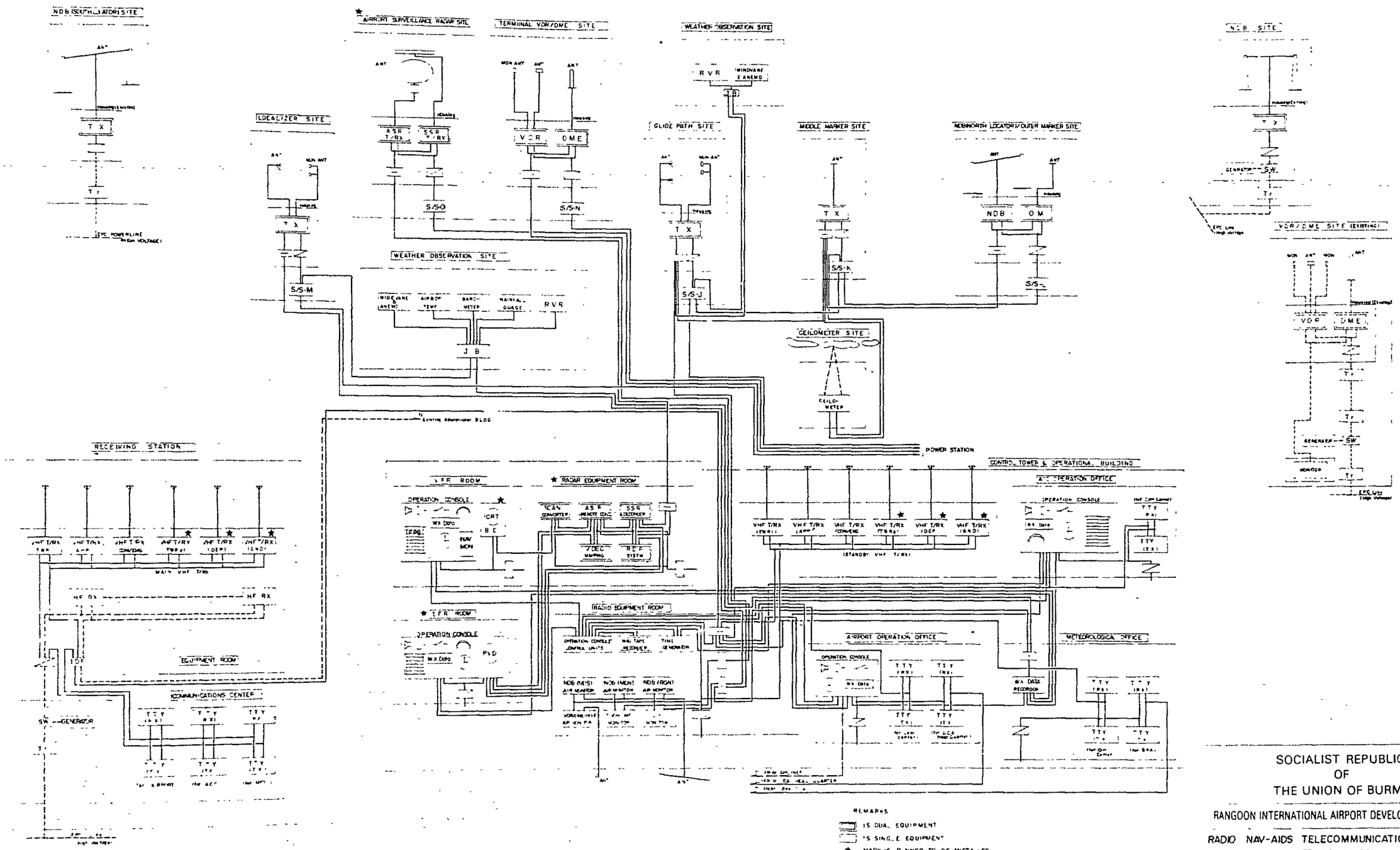

SOCIALIST REPUBLIC
OF
THE UNION OF BURMA

RANGOON INTERNATIONAL AIRPORT DEVELOPMENT PROJECT

RADIO NAV-AIDS TELECOMMUNICATIONS AND METEOROLOGICAL SYSTEM DIAGRAM

MAR 1980

36

FEASIBILITY STUDY

JAPAN INTERNATIONAL COOPERATION AGENCY

APPENDIX 7B

SOIL EXPLORATION EQUIPMENTS
AND
MATERIAL TESTING APPARATUS

TABLE 7B-1 SOIL EXPLORATION EQUIPMENTS AND MATERIAL TESTING APPARATUS

Boring Machine
Water Pump
C.B.R. Testing Machine
Unconfined Compression Testing Machine
Triaxial Compression Testing Machine
Consolidation Unit
Laboratory Oven
Compaction Mould and Hammer
Physical Testing Unit
Mortar Mixer
Organic Impurities Test Set
High Strength Capping Compound Set
Air Meter
Flexure Attachment
Benkelman Beam
Profile Meter
Core Cutter
Concrete Cutter
Schmidt Hammer
Combression Test Machine
Los Angeles Abrasion Machine
Penetration Test Apparatus
Ductility Test Set
Asphalt Oven
Marshall Stability Test Set
Aspahlt Mold

APPENDIX 8A

AIRFIELD LIGHTING DATA

8A-1 HISTORY OF AIRFIELD LIGHTING AT RANGOON INTERNATIONAL AIRPORT

1. Runway Lights

G.E.C. ZA202 flush 36 watt inset Lamps on one series circuit was installed during 1954. The type of primary underground cable:-

Single core copper 0.01sq.in. P.I.L.C. armoured 3.3 KV type was used. The type of isolating transformers are 6.6 Amps.1:1 rated 36 watt G.E.C. make was used. The lights were installed 200ft - apart with only 5 Nos- 360° green for threshold. This system breakdown frequently. Insulation resistance to earth was less than 0.5 meg.ohms. It was renovated during 1957-58, after repairing most of the underground cables and transformers and the insulation brought up to 1 meg-ohms. Reliability of the system was always at doubt.

During 1967, a new high intensity runway lighting system was installed with G.E.C. ZA 105 - 200 watt elevated lights. All primary cable was renewed with 0.01sq.in. P.V.C. insulated, brass tapped and P.C.P. sheathed single core copper conductor 3.3 KV type cable. All isolating transformers were renewed with XT - 107 G.E.C. 200 watt type. The system was on two series circuits. Total Load 20 KW.

1.1 Threshold Lights

During 1967, a new high intensity threshold lighting system was installed with G.E.C. ZA 105,200 watt lamp with green filters, showing in the direction of landing. There were altogether 18 Threshold Lights on each end of runway with a gap of 72 feet in the centre. Total Load 10 KW.

1.2 Wing Bar Lights

During 1967, wing bar lights were installed. These were also ZA. 105 G.E.C. make, showing green in the direction of Landing. There were 10 lights on each end of runway. Total Load 6 KW.

1.3 Runway End Lights

The same threshold lights were used by installing Red filters 180. Out of 18 threshold lights minimum 6 Nos. were provided with 180 Red filters and the rest were blanked out to indicate the end of the runway.

Insulation resistance of the system when installed during 1967 was 20 meg-ohms per circuit.

1.4 Present runway lighting system is very satisfactory except the threshold and wing bar lights which however needs more candales output, hence renewal of fittings with a better type units are needed.

1.5 Brilliancy setting 100%, 30%, 10%, 3% and 1% used. Maximum current 6.4 Amps per circuit on 100%.

2. Taxiway Lights

These fittings and underground cable system when originally installed during 1954 was identical to the runway lighting system using ZA 202 G.E.C. fixtures but with blue 360° filters. Insulation resistance was very poor, i.e. below 1 meg-ohms.

The old system was renovated during 1968, by replacing all primary underground cable with P.V.C. 3.3 KV type already mentioned above. All isolating transformers cable with G.E.C. type XT 105-45 watt, and new lamps were used. The old fitting was retained. There are 3 taxiway circuits, i.e. N.E., Centre and S.W. taxiways. Total load 16 KW. Maximum 5.2 Amp. only.

2.1 The system is very old, and more lights are needed on the curves and turning points.

3. Approach Lights

5 bar centre line calvert system was installed during 1961. This system is 8.8 Amps series current type, using Siemen AHF 18-100 watt light units and connected to three circuits. Primary cable is single core copper conductor 6 mm^2 P.V.C. insulated copper wire mesh and P.C:P. sheathed 3.3 KV.

3.1 Brilliancy setting at 100%, 30%, 10% and 3%; maximum current of 8.2 Amp on 100% setting used. Total load 24 KW.

3.2 Insulation resistance when installed uring 1961 was 50 meg-ohms each circuit.

3.3 These light fittings are now out of date and modern system use 250 - 300 watt lamps.

4. Vasis

12 boxes VASIS G.E.C. model ZA 707 type was installed on both approaches during 1968. Independent circuits were used for portside and starboard. The system was designed for 2-1/2° glide slope with a maximum clearance of 19 feet over the threshold. Total load for 12 boxes is 12.5 KW.

4.1 This system needs upgrading for wide bodied aircrafts and re-designed for 3° glide slope with a minimum clearance of 24 feet over the threshold.

4.2 Latest type PARI. (Precision Approach Path indicator) need consideration.

4.3 Type of cable and transformers are same as High Intensity runway system.

4.4 Insulation resistance when installed was 25 meg-ohm per circuit.

5. Aerodrome Location Beacon

This location beacon was installed uring 1968, on the water tower, height approximately 50 feet. This unit is also G.E.C. model ZA-503, 2250 watts. 230V-50 Hz input adjustable from 180V to 230V input. It rotates at a rate of 3 r.p.m. There are 2 white and 2 green lenses.

6. Wind Direction Indicator

The present illuminated wind direction indicator was installed during 1961, design and constructed by the Electrical Engineering Section of Dept. of Civil Aviation. It uses 4 Nos. 200 watt. 230V lamps. Total load 800 watt.

8. Obstruction Lights

There are altogether 12 Nos. G.E.C. ZA. 752 twin fittings using 75 watt lamps.

9. Apron Flood Lights

6 Nos. ZA 304Q G.E.C. 1500 watts. Tungsten Halogen lamp fittings were installed during 1967. Total load 9000 watts. Each light is controlled by individual switching arrangement.

10. Airport Lighting Control Desk

This control desk is also G.E.C. make and installed during 1967. All circuits controlled are 230V A.C. system, No back indication is provided.

11. Control Cubicles (GEC)

The system of controlling brightness of all series circuits is done by changing tappings of the main transformer by use of contactors operating on 230V control circuit. The main transformer is pre-adjusted to meet the required circuit load. These were also installed during 1967.

12. Standby Generator

These is only one 32 KVA Deutz diesel generator 230/400V 50Hz manually operated to supply emergency power to the need of only 25% of the load. This generator was installed during 1954.

There is another 150 KVA 110/220 stepped up roltage by transformer to 230/400V, diesel air start manual operated standby generator "Bausher". This machine is very old and is unserviceable since 1976.

Present load demand at 100% brilliancy setting is:-

Runway lights	36 KW
Taxiway "	16 KW
Approach "	24 KW
VASIS "	12.5 KW
Aerodrome Beacon	3 KW
Flood lights	9 KW
Obstruction lights, wind and landing direction indicator	2 KW
Nav. aids	5 KW
Emergency lights	5 KW
	112.5 KW

13. Airport Maximum Demand

Airport maximum demand varies from 400 to 550 KW must of the load is on air-conditioning which alone is 250 KW on full operation.

14. Air-conditioning System

There are 4 Nos. 5H80 carrier compressors, total capacity 200 tons, (2,720,000 BTU/HR). It is a chilled water system, where the temperator of chilled water is maintained at 40°F and ADP 52°F. Inside temperature 76°F RH.40%. This is a design condition. The type of refrigeration gas used is Freon 12 (CCL2F2) or Carrene 7. CH_2 CL_2. Total 2,000 lbs.

15. Present Load

3 x 400 KVA transformers supply power to, Control tower, New Terminal Building, Freight Shed, P.O.L. Company, Air-conditioning plant.

1 x 400 KVA transformer supply power to Maintenance Hangars, DCA, Water pumps, Overhead system.

1 x 100 KVA transformer supply power to residential quarters, DCA.

1 x 100 KVA transformer supply power to North Hangar.

Total installed capacity is 1,800 KVA, out of which 30% of the capacity utilized.

8A-2 MAINTENANCE SCHEDULE FOR AIRFIELD LIGHTING SYSTEM AT RANGOON AIR PORT

(a) Daily Programme

1) Visual inspection of Runway, Taxiway and VASIS lights.

2) To cut and clear grass in 6 ft. vicinity of 136 Nos. of Runway and 224 Nos. of Taxiway light. 10 Nos. of lights to be done daily (Monsoon season June to October).

3) To check the alignment of concrete frames for lights with surface of Runway and if out of alignment to make necessary alignment.

4) To cut and clear grass to 10 ft. vicinity of Vasis lights (Monsoon reason June to October).

(b) Fortnightly Programme

1) To check and record the insulation of cables and transformers of Runway and Vasis lights.

2) To check the angle of Vasis lights.

(c) Monthly

1) To check and record the insulation of cables and transformers of all visual aid landing equipment runway lights, taxiway lights.

2) To see that the de-humidifying agent (Silica gel) in all the transformers in (a) Main substation (b) Estate substation (c) Maintenance area substation (d) North hanger substation are free of humidity and if not to bake them to make them dry. To clean the substation of dust, mice and insects.

3) To clean the substation of the air field lighting system. To remove dust from the control panels.

4) To lubricate the chain and motor of the location beacon. To clean the inside of the location beacon and to inspect the quality of the lamp and if black to renew it.

(d) Every Six Months

1) To inspect all the pumps and compressors supplying water to the Rangoon Air Port.

2) To clean the 24 Nos. of Vasis lights including the reflector white filter, red filter and to check if the inclimation is correct or not.

3) To clean the lights for street lighting purposes and to remove insects and dust.

(e) Yearly

1) To check the insulation of power cables supplying Electric power to the terminal building and runway.

2) To check and record of the results of earthing and lighting arrestor earthing.

3) To check the oil in the transformers at the main substation, maintenance estate and north hanger substations and also the dielectric strength of the oil in OCB's. To see that the OCB's trip correctly.

4) To clean the lights for visual aids and the contractor points from dust and rust.

5) To clean 138 Nos. of approach lights, glass and reflectors to be cleaned with water and to correct the degree setting of each individual lamps. (10 Nos to be done each day).

6) To paint the cubbical, iron frames, iron poles to prevent rusting.

7) To paint the lights for visual aids and to paint new numbers.

8) To check the alignment of the location beacon and to realign it to its proper setting of 3° if nut of alignment.

9) To clean the glass reflectors of runway lights, taxiway lights and also the reflectors with water did to replace without dust.
(10 Nos. to be done each day 460 Nos. in all)
To check if the rubber gasket is still good.